*Since 1952*

# GALFER

**PERFORMANCE BRAKING SYSTEMS**

# MOTORCYCLE CATALOGUE 2015-2016

UNDER <125cc.

ABOVE >125cc.

OFF-ROAD

ATV-QUADS

EU Made in SPAIN

APPROVED BY

| | FD | | DF | | |
|---|---|---|---|---|---|
| SEMI METAL COMPOUND | SEMI METAL<br>UNIVERSAL<br>FRONT & REAR | G1054 | W | | FIXED WAVE<br>WAVE FIJO<br>WAVE FISSO<br>WAVE FIXE |
| SEMI METAL COMPOUND | SCOOTER<br>SCOOTER<br>FRONT & REAR | G1050 | WLL | | FIXED SOLID<br>FIJO LLENO<br>FISSO SOLIDO<br>FIXE SIOLIDE |
| SEMI METAL COMPOUND | TRIAL TOP<br>TRIAL<br>FRONT & REAR | G1805 | RW | | FIXED GROOVED<br>FIJO RANURADO<br>FISSO BAFFATO<br>FIXE RAINURÉ |
| SINTER METAL COMPOUND | SINTERED<br>STREET<br>FRONT | G1370 | WS | | FIXED OVESIZE<br>FIJO SOBREMEDIDA<br>FISSO MAGGIORATO<br>FIXE OVERSIZE |
| SINTER METAL COMPOUND | SINTERED<br>STREET<br>REAR | G1371 | RWS | | FIXED GROOVED OVESIZE<br>FIJO RANURADO SOBREMEDIDA<br>FISSO BAFFATO MAGGIORATO<br>FIXE RAINURÉ OVERSIZE |
| SINTER METAL COMPOUND | SINTERED<br>SCOOTER<br>FRONT & REAR | G1380 | FLW | | FLOATING STEEL CENTER<br>FLOTANTE NÚCLEO ACERO<br>FLOTTANTE MOZZO ACCIAIO<br>FLOTTANT FRETTE ACIER |
| SINTER METAL COMPOUND | SINTERED<br>OFF-ROAD<br>FRONT & REAR | G1396 | FLS | | FLOATING OVERSIZE STEEL CENTER<br>FLOTANTE SOBREMEDIDA NÚCLEO ACERO<br>FLOTTANTE MAGGIORATO MOZZO ACCIAIO<br>FLOTTANT OVERSIZE FRETTE ACIER |
| SINTER METAL COMPOUND | SINTERED<br>ATV-QUAD<br>FRONT & REAR | G1397 | FRS | | FLOATING GROOVED OVERSIZE STEEL CENTER<br>FLOTANTE RANURADO SOBREMEDIDA NÚCLEO ACERO<br>FLOTTANTE BAFFATO MAGGIORATO MOZZO ACCIAIO<br>FLOTTANT RAINURÉ OVERSIZE FRETTE ACIER |
| SINTER METAL COMPOUND | SINTERED<br>SPORT<br>FRONT | G1375 | CW | | FLOATING ALUMINIUM CENTER<br>FLOTANTE NÚCLEO ALUMINIO<br>FLOTTANTE MOZZO ALLUMINIO<br>FLOTTANT FRETTE ALLUMINIUM |
| RACING COMPOUND | GP<br>STREET &<br>COMPETITION | G1003 | CRW | | FLOATING GROOVED RACING<br>FLOTANTE RANURADO RACING<br>FLOTTANTE BAFFATO RACING<br>FLOTTANT RAINURÉ RACING |
| RACING COMPOUND | GP<br>COMPETITION<br>ONLY | G1300 | I-D | | LEFT - RIGHT<br>IZQUIERDA - DERECHA<br>SINISTRA - DESTRA<br>GAUCHE - DROITE |

**INTRODUCTION • INTRODUCCIÓN**
INTRODUZIONE • INTRODUCTION 2

**Scooter Street** — **UNDER <125cc.** (from year 1990)

APPLICATIONS
LIST 33
FD 58
DF 75
MF 83

**Scooter Street Sport&GP** — **ABOVE >125cc.** (from year 1990)

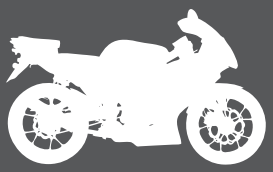

APPLICATIONS
LIST 87
FD 120
DF 149
MF 174

**Off-Road** — **MOTOCROSS ENDURO TRIAL** (from year 1990)

APPLICATIONS
LIST 177
FD 191
DF 203
MF 214

**Off-Road** — **UTV-ATV-QUADS** (from year 1990)

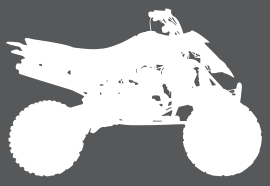

APPLICATIONS
LIST 215
FD 224
DF 230
MF 232

**FD** **PADS DRAWINGS • DIBUJOS PASTILLAS** 233
DISEGNI PASTIGLIE • DESSINS PLAQUETTES

**DF** **DISC WAVE® DRAWINGS • DIBUJOS "DISC WAVE®"** 321
DISEGNI "DISC WAVE®" • DESSINS "DISC WAVE®"

**MF** **SHOES DRAWINGS • DIBUJOS MORDAZAS** 359
DISEGNI GANASCE • DESSINS MÂCHOIRES

**FK** **LINES APPLICATIONS LIST • LISTA APLICACIONES LATIGUILLOS** 365
ELENCO APPLICAZIONI TUBI • LISTE APPLICATIONS DURITES

**SP** **BRACKETS OVERSIZED DF • SOPORTES DF SOBREMEDIDA** 381
SUPPORTI DF MAGGIORATI • SUPPORTS DF GRANDE TAILLE

**KG** **KITS APPLICATIONS LIST • LISTA APLICACIONES KITS** 387
ELENCO APPLICAZIONI KITS • LISTE APPLICATIONS KITS

**CROSS REFERENCE PADS • CRUCE REFERENCIAS PASTILLAS** 397
COMPARATIVA PASTIGLIE • CORRESPONDANCE PLAQUETTES

GALFER is a leading manufacturer of friction materials and components for braking systems for the automobile, motorcycling, and bicycle sectors. Since our company was founded in 1952, we have been known for being at the forefront of innovation, quality and organization. Today we link our experience and tradition to new technologies, cutting-edge materials and the most advanced management systems. To stay at the forefront of the market and to get to know in depth the needs for the industry, the R&D department at GALFER works closely with top-level competition teams.All our products are strictly tested for quality to guarantee its safety. We are so committed with quality regulations that our quality controls exceed the ECE R-90 standards. GALFER business philosophy is based on the values that led us to become a world leader in braking systems. There's only a thing that our brakes cannot stop: the speed at which we enter the future.

GALFER es una empresa líder en la fabricación de materiales de fricción y componentes de sistemas de frenado para los sectores de automoción, motociclismo y bicicleta. Desde nuestra fundación, en 1952, hemos destacado por estar en primera línea en cuestiones de innovación, calidad y organización. Hoy nuestra experiencia y tradición se unen a las nuevas tecnologías, los materiales de última generación y los sistemas de gestión más novedosos. Para estar a la vanguardia del mercado y conocer en profundidad las necesidades del sector, el departamento de I+D+i de GALFER trabaja en estrecha colaboración con diversos equipos de alta competición mundial. Todos nuestros productos se someten a un estricto control de calidad que garantiza su seguridad. Nuestro compromiso con la legislación en materias de calidad es tal que nuestros controles superan los estándares de la directiva ECE R-90 vigente. El espíritu empresarial de GALFER se fundamenta en la apuesta por los valores que nos han llevado a consolidarnos como el referente internacional en sistemas de frenado. Lo único que nuestros sistemas no pueden frenar es la velocidad con que nos adentramos en el futuro.

GALFER
Presentation Video

# WELCOME TO GALFER

*Manufacturers of friction systems since 1952*

Industrias Galfer é stata fondata nel 1952 da Maffio Milesi. Trascorso piú di mezzo secolo GALFER si é consolidata come uno dei principali produttori di materiale d'attrito, freni, per il settore automobilistico e motociclistico. Tradizione , esperienza nel settore ricambi, investimenti continui in R&D, macchinari di ultima generazione, alta tecnologia e marcata tendenza per l'innovazione ci collocano fra le Imprese leader nel settore, con uno standard qualitativo che ci consente di essere stati scelti da molti produttori di veicoli come partner per lo sviluppo e fornitori. Attivi nel campo agonistico, ci possiamo vantare sia nelle 4 quanto nelle 2 ruote di aver contribuito ad ottenere vari campionati mondiali: Velocitá, SBK, MX, SX, EC, Trial, Supermotard.

Industrias Galfer a été fondée en 1952 par Maffio Milesi. Plus d'un demi siècle s'est écoulé depuis et Galfer est aujourd'hui devenu l'un des principal fabricant de matériel de friction et de système de freinage du secteur deux roues et automobile. Notre expérience, consolidée par notre investissement continu en recherche et développement, nos machines de dernières génération, nos technologies de pointe et notre compromis pour l'innovation font de Galfer une des sociétés leader du secteur. Notre extrême exigence pour la qualité nous permet d'équiper les véhicules des principaux fabricants mondiaux et de soutenir de nombreux pilotes pour l'obtention de titres mondiaux: Championnat du Monde de vitesse, SBK, MX, SX, EC, Trial, Supermotard.

GALFER
galfer
EBRO

GALFER
GALFER

GALFER
PRIVATE PARKING
GALFER

GALFER
GALFER

GALFER MOTO

The R+D+I department is key to the evolution of each of our products. Each piece is submitted to strict quality controls that guaranty the highest safety and performances. Considering the current market trends, Industrias Galfer is moving it current management system ISO9001 to the new ISO/TS 16949, in order to meet the requirements of the automotive sector and supply its clients more efficiently. Teamwork and collaboration with customers and suppliers is the synergy that allows us to develop new materials and techniques to improve product day after day. As a result, we have achieved great advances that result in patents and remarkable innovations. Our products are approved by the TÜV (KBA 60811 - 61147 - 61148 - 61197). The brake discs "Disc Wave®" is an example of our drive to innovate: product led to excellence that offers the end user a technology taken from the high competition.

El Departamento de I+D+i es clave en la evolución de cada uno de nuestros productos. Cada pieza se somete a un estricto control de calidad que garantiza su máxima seguridad y prestaciones. Dadas las actuales tendencias del mercado, Industrias Galfer está migrando su actual sistema de gestión ISO9001 al sistema ISO/TS 16949, con el objeto de poder asumir las exigencias del sector de la automoción y poder suplir de forma óptima las necesidades de nuestros clientes. El trabajo en equipo y la estrecha colaboración con clientes y proveedores es la sinergia que nos permite desarrollar nuevos materiales y técnicas capaces de mejorar el producto día a día. Gracias a ello, hemos conseguido grandes avances que se traducen en patentes e innovaciones destacables. Nuestros productos están homologados por la certificación TÜV (KBA 60811 - 61147 - 61148 - 61197). El disco de freno "Disc Wave®" es un ejemplo de nuestro afán innovador: un producto llevado a la excelencia que ofrece al usuario final una tecnología de la alta competición.

EU Made in SPAIN

## PUSHING BRAKES TO THE LIMIT

Le nostre attività di R & S sono la chiave per l'evoluzione dei nostri prodotti. Ogni pezzo viene sottoposto a severi controlli di qualità e garantisce la massima sicurezza e prestazioni. Nell'intento di seguire la tendenza del mercato, Galfer è migliorare il suo attuale sistema qualitativo gestionale ISO 9001 passando al sistema ISO/TS 16949, obbiettivo è di supplire a tutte le esigenze del settore automozione far fronte a tutte le necessità dei propri clienti. Il lavoro di squadra e la stretta collaborazione con i fornitori e clienti è la sinergia che ci permette di sviluppare nuovi materiali e nuove tecniche per migliorare il prodotto ogni giorno. Come risultato, abbiamo fatto grandi progressi che si traducono in brevetti con notevoli evoluzioni. I nostri prodotti sono approvati dal TÜV (KBA 60811 - 61147 - 61148 - 61197). I dischi freno "Disc Wave®" sono un esempio della nostra volontà di innovare: un prodotto di eccellenza e alta tecnologia rivolto all'utente finale.

Notre département d'ingénieurie joue un rôle clé dans l'évolution de chacun de nos produits. Chaque pièce est soumise à un contrôle qualité strict qui garantit une sécurité et des performances optimale. Compte tenu des tendances actuelles du marché, Industrias Galfer est changer son système actuel de gestión ISO9001 vers le système ISO/TS 16949 afin de pouvoir satisfaire les exigences du secteur automotion et approvisionner de façon optimale ses clients. Notre travail d'équipe et collaboration continue avec nos clients et fournisseurs crée une synergie qui nous permet de développer de nouveaux matériaux et techniques capables d'améliorer nos produits jours après jours. Grâce à cela, nous avons realisé de grands progrès qui se traduisent par des brevets et de remarquables innovations. Nos produits sont approuvés par le TÜV (KBA 60811 - 61147 - 61148 - 61197). Le disque de frein "Disc Wave®" est un exemple de notre volonté d'innover: un produit gage d'excellence qui offre à l'utilisateur final une technologie de haute competition.

EU Made in SPAIN

GALFER

GALFER
GALFER
GALFER

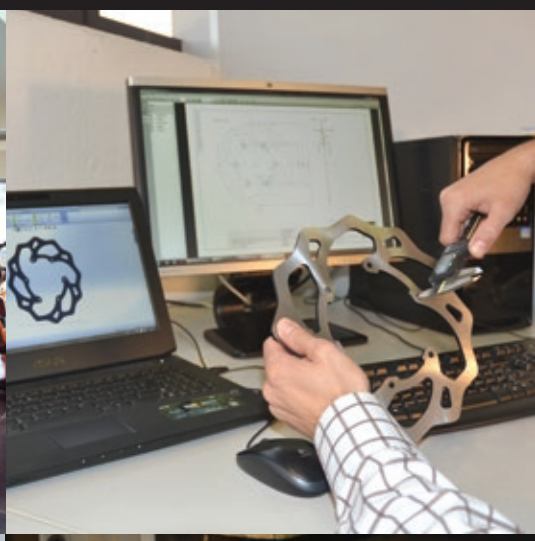

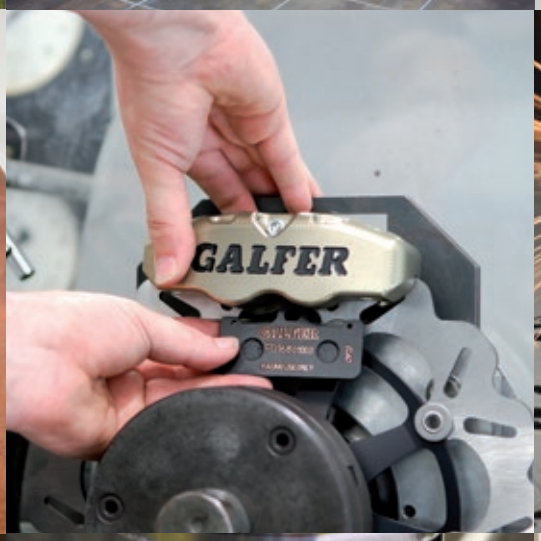
GALFER

579
581
4.7
0.1
2.5

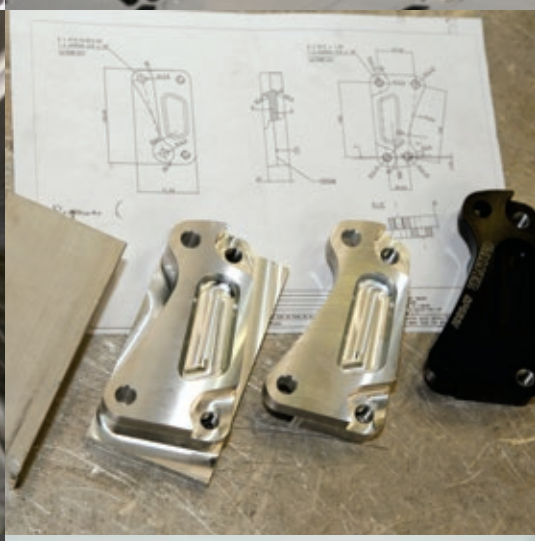

GALFER
CALIDAD
DF606WK
GALFER
CALIDAD
PIEZAS NO OK
DF606WK

GALFER
GALFER
GALFER

## QUALITY SYSTEM • SISTEMA DE CALIDAD
### SISTEMA QUALITA • SYSTÈME DE QUALITÉ

GALFER MOTO

Our products have been certified by TÜV (KBA 60811 - 61147 - 61148 - 61197) and the most demanding product standards:
- ABE 60811: Brake pads, Typ 1054
- ABE 61147: Fixed brake discs DISC WAVE ®, Typ W
- ABE 61148: Floating brake discs DISC WAVE ®, Typ FLW
- ABE 61197: Brake pads, Typ 1375
- R90 Genehmigung 01285: Brake pads, Typ GALFER 1045

Our quality assurance system reflects our experience after all these years supplying friction materials to the leading automobiles and motorbikes manufacturers.

Nuestros productos están homologados por la certificación TÜV (KBA 60811 - 61147 - 61148 - 61197) y con las homologaciones de producto más exigentes:
- ABE 60811: Pastillas de freno de disco, Typ 1054
- ABE 61147: Discos de freno DISC WAVE® fijos de recambio, Typ W
- ABE 61148: Discos de freno DISC WAVE® flotantes de recambio , Typ FLW
- ABE 61197: Pastillas de freno de disco, Typ 1375
- R90 Genehmigung 01285: Pastillas de freno, Typ GALFER 1045

Nuestro sistema de garantía de calidad es un reflejo de la experiencia ganada con los años de suministro de materiales de fricción a los principales fabricantes de automóviles y motos.

APPROVED BY

# ECE-R90 & TUV (KBA) APPROVALS

I nostri prodotti sono certificati dall'ente TÜV (KBA 60811 - 61147 - 61148 - 61197) e da i piu esigenti enti di certificazione di prodotto:
- ABE 60811: Pastiglie freni disco, Typ 1054
- ABE 61147: Dischi freno DISC WAVE® fissi ricambio, Typ W
- ABE 61148: Dischi freno DISC WAVE® flottanti ricambio, Typ FLW
- ABE 61197: Pastiglie freni disco, Typ 1375
- R90 Genehmigung 01285: Pastiglie freno, Typ GALFER 1045

Il nostro sistema di garanzia di qualità riflette la nostra esperienza acquisita nel corso degli anni in cui abbiamo fornito materiali di attrito alle piu importanti case automobilistiche e motociclistiche.

Nos produits sont certifiés par TÜV (KBA 60811 - 61147 - 61148 - 61197) et sont conformes aux normes les plus exigeantes:
- ABE 60811: plaquettes de frein à disque, Typ 1054
- ABE 61147: disques de frein à étrier fixe DISC WAVE®, Typ W
- ABE 61148: disques de frein à étrier flottant DISC WAVE®, Typ FLW
- ABE 61197: plaquettes de frein à disque, Typ 1375
- R90 Genehmigung 01285: plaquettes de frein, Typ GALFER 1045

Notre système de garantie de la qualité est le fruit de notre longue expérience en tant que fournisseurs de garnitures pour les principaux fabricants d'automobiles et de motos.

APPROVED BY

**- MISSION**: To offer friction materials and components for comprehensive brake system solutions.
**- VISION**: To become an international benchmark for braking systems.
**- VALUES**: INNOVATION: Continual introduction of new technologies to offer improved products to the market.
ASSURANCE: Offering solutions fitted to our clients needs and to complying with current laws in all our activities, as well as any other agreed requirements related to the management system.
CONFIDENCE: By means of innovation and implementation of a quality management system based on continual improvement.
EFFICIENCY: Encouraging teamwork and facilitating direct and customized attention to our clients and complying with all our products specifications.
SUSTAINABILITY: Respecting the environment and minimizing the environmental impact.
SAFETY: Investing and training to guarantee the maximum safety and occupational health.
ACCOUNTABILITY: Ethical and responsible management in all our activities.

**- MISIÓN**: Ofrecer materiales de fricción y componentes para soluciones integrales de sistemas de frenado.
**- VISIÓN**: Convertirnos en un referente internacional en sistemas de frenado.
**- VALORES**: INNOVACIÓN: incorporación constante de nuevas tecnologías para aportar mejoras de productos al mercado.
GARANTÍA: ofrecer soluciones ajustadas a los requisitos de nuestros clientes y cumplir con la legislación vigente en todas nuestras actividades, así como otros requisitos suscritos relacionados con el sistema de gestión.
CONFIANZA: mediante la innovación y la implantación de un sistema de gestión de calidad basado en la mejora continua que garantice los resultados esperados.
EFICACIA EN LA GESTIÓN: fomentando el trabajo en equipo y facilitando un trato directo y personalizado a nuestros clientes y cumpliendo todas las especificaciones de nuestros productos.
SOSTENIBILIDAD: respeto al medio ambiente y minimización del impacto medio ambiental.
SEGURIDAD: inversión y formación para garantizar la máxima seguridad y salud en el trabajo.
RESPONSABILIDAD: gestión ética y responsable en todas nuestras actividades.

## THE SECRET OF SUCCESS

**- LA NOSTRA MISSIONE**: Offrire i migliori materiali di attrito e componenti per soluzioni integrate di sistemi frenanti. L
**- A NOSTRA VISIONE:** Diventare leader internazionale dei sistemi frenanti.
**- I NOSTRI VALORI:** INNOVAZIONE: Adottare nuove tecnologie per sviluppare e migliorare i prodotti sul mercato.
GARANZIA: Offrire soluzioni adatte alle esigenze dei nostri clienti e rispettare la normativa vigente in tutte le nostre attività, nonché gli altri requisiti relativi al sistema di gestione.
AFFIDABILITÀ: Garantire i risultati attraverso l'innovazione e l'implementazione di un sistema di gestione della qualità basato sul miglioramento continuo.
GESTIONE EFFICACE: Favorire il lavoro di squadra, procurare un'attenzione diretta e personalizzata ai nostri clienti e compiere tutte le specifiche dei nostri prodotti.
SOSTENIBILITÀ: Rispettare l'ambiente e cercare di minimizzare l'impatto ambientale.
SICUREZZA: Investire in formazione per garantire la massima sicurezza e la salute nel luogo di lavoro.
RESPONSABILITÀ: Essere etici e responsabili in tutte le nostre attività.

**- MISSION**: fournir des garnitures et des composants destinés à des solutions globales de systèmes de freinage.
**- PERSPECTIVE** devenir une référence internationale en matière de systèmes de freinage.
**- VALEURS**: INNOVATION: intégrer constamment de nouvelles technologies visant à améliorer les produits disponibles sur le marché.
GARANTIE: proposer des solutions adaptées aux attentes de nos clients, respecter la législation en vigueur dans l'ensemble de nos activités et répondre à toutes les exigences du système de gestion.
CONFIANCE: innover et implanter un système de gestion de la qualité reposant sur l'amélioration continue et garantissant l'obtention des résultats escomptés.
EFFICACITÉ DE GESTION: encourager le travail en équipe, réserver une attention directe et personnalisée à nos clients, et respecter toutes les spécifications de nos produits.
DÉVELOPPEMENT DURABLE: respecter l'environnement et minimiser l'impact sur ce dernier.
SÉCURITÉ: investir et former pour garantir une hygiène et une sécurité maximales au travail.
RESPONSABILITÉ: gérer toutes nos activités sur la base de critères éthiques et responsables.

Brake pads are fundamental elements in any brake system because they are directly responsible for transmitting the power of the caliper to the brake disc so that it can overpower the brake pads without strain. Galfer has developed specifics compounds for each use and motorcycle model looking to offer the top performances in all type of driving and for all the profiles and needs of users.

General features:
· Powerful, progressive & modular brake.
· Low wear rate and minimum noise.
· Maximum resistance to the fade effect.
· Efficiency on dry and wet conditions.
· No wear on brake disc.
· Certificate TÜV (KBA n° 60811 / 61197)
· SEMI METAL G1054 compound upgraded.
- New SCOOTER G1050 compound.

APPROVED BY

Las pastillas de freno son un elemento fundamental en el sistema de frenado, porque son las responsables directas de transmitir la fuerza de la pinza al disco, por lo que están sometidas a grandes esfuerzos. Galfer ha desarrollado compuestos específicos para cada uso y tipo de motocicleta, buscando ofrecer las máximas prestaciones en todo tipo de conducción y para todos los perfiles y necesidades de usuarios.

Características principales:
· Frenada potente, progresiva y modulable.
· Bajo índice de desgaste y mínimo ruido.
· Máxima resistencia al efecto "fade".
· Muy eficiente en seco y mojado.
· Mínima agresividad sobre el disco.
· Certificado TÜV (KBA n° 60811 / 61197)
· Compuesto SEMI METAL G1054 mejorado.
- Nuevo compuesto SCOOTER G1050.

APPROVED BY

Le pastiglie freno sono elementi fondamentali di ogni impianto frenante in quanto responsabili di trasmettere la forza della pinza al disco, sono quindi sottoposte a grandi sforzi. Galfer ha sviluppato mescole specifiche per tutti i modelli di motocicli,cercando di offrire la massima prestazione per tutti gli stili di guida e per tutte le necessità del pilota.
Caratteristiche principali:
· Frenata potente, progressiva e modulare.
· Basso indice di consumo e rumore.
· Massima resistenza al fading.
· Molto efficace su asciutto e bagnato.
· Minima abrasione del disco.
· Certificato TÜV (KBA n° 60811 / 61197)
· Compound SEMI METAL G1054 migliorato.
- Compound nuovo SCOOTER G1050.

APPROVED BY

Les plaquettes de frein sont un élément fondamental pour le système de freinage; elles sont directement responsables de transmettre la force de l'étrier au disque de frein, et donc elles sont soumises à de gros efforts. Galfer, a développé des composants spécifiques pour chaque usage et type de motos, en cherchant à offrir les prestations maximales dans tous types de conduite et pour tous les profits et besoins des usages.
Caractéristiques principales:
· Freinage puissante, réglable et progressif.
· Faible taux d'usure et bruits minimes.
· Resistance maximale a l'effet "fade".
· Très efficace sur sec et mouillé.
· Faible agressivité sur le disque de frein.
· Certificat TÜV (KBA n° 60811 / 61197)
· Composé SEMI METAL G1054 améliorée.
- Composé nouveau SCOOTER G1050.

APPROVED BY

# COMPOUND APPLICATIONS • APLICACIÓN COMPUESTOS • APPLICATIONS COMPOSÉ • APPLICAZIONI MESCOLA

## ON ROAD STANDARD RIDING

>50cc | 125cc | 250cc | 500cc | 750cc | 1000cc

DRY / WET

- SCOOTER G1050
- SEMI METAL G1054
- SINTERED G1370 G1380

## ON ROAD SPORT RIDING

>50cc | 125cc | 250cc | 500cc | 750cc | 1000cc

DRY / WET

- SEMI METAL G1054
- SINTERED G1375
- CP G1003 G1300 — Competition use only

## OFF ROAD ENDURO & MX

>50cc | 125cc | 250cc | 500cc | 750cc | 1000cc

DRY / WET

- SEMI METAL G1054
- SINTERED G1396 G1397

## OFF ROAD TRIAL

>50cc | 125cc | 250cc | 500cc | 750cc | 1000cc

DRY / WET

- TRIAL TOP G1805

## FRICTION COEFFICIENT / SPEED
## COEFICIENTE DE FRICCIÓN / VELOCIDAD
### COEFFICIENTE DI ATTRITO / VELOCITÀ
### COEFFICIENT DE FRICTION / VITESSE

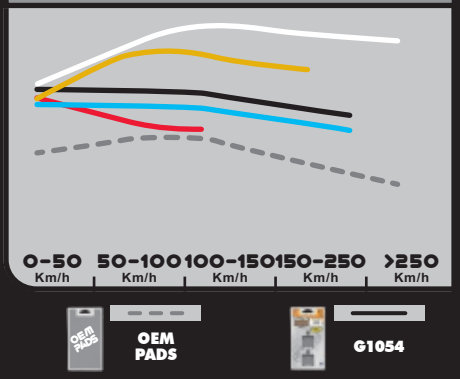


## PAD LIFE / SPEED
## DURABILIDAD DE LA PASTILLA / VELOCIDAD
### VITA PASTIGLIE / VELOCITÀ
### DURABILITÉ PLAQUETTES / VITESSE

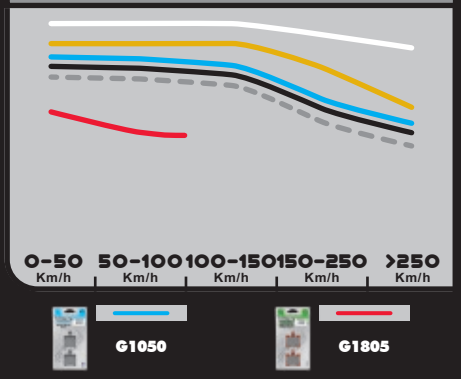


## FRICTION COEFFICIENT / TEMPERATURE
## COEFICIENTE DE FRICCIÓN / TEMPERATURA
### COEFFICIENTE DI ATTRITO / TEMPERATURA
### COEFFICIENT DE FRICTION / TEMPÉRATURE

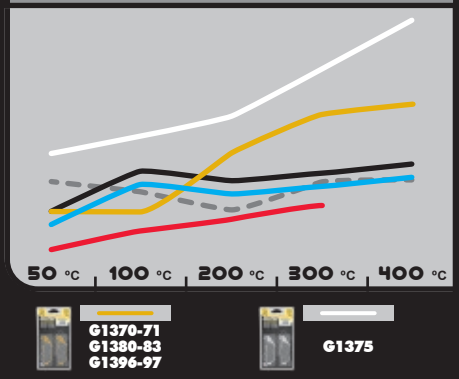


## BRAKE COMPARATIVE • COMPARATIVA FRENADO • COMPARATIVA FRENATA • FREIN COMPARATIF

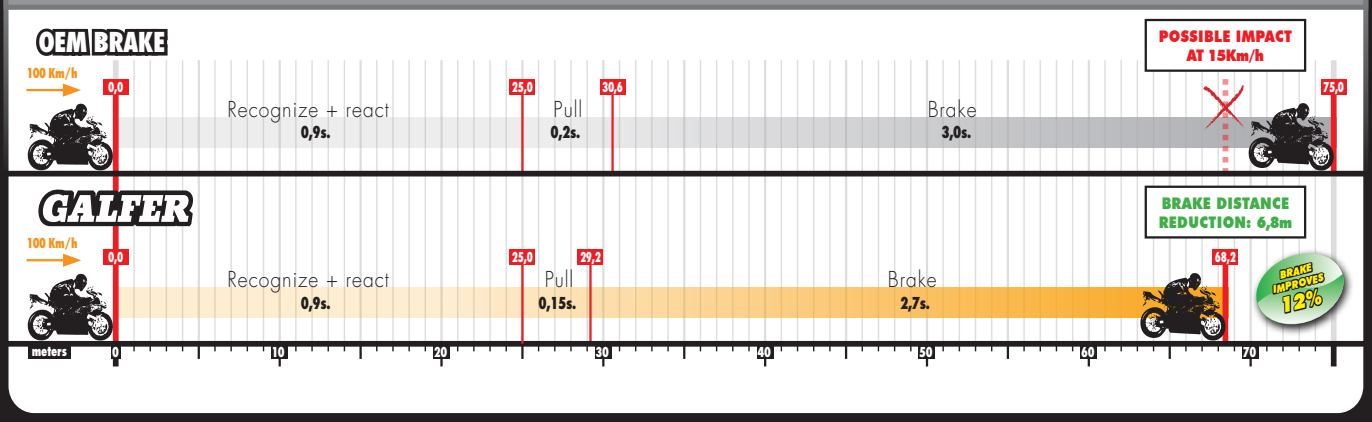

## SEMI METAL G1054

Scooter Off-Road Street Sport&GP
Front Rear | Front Rear | Front Rear | Front Rear

DURABILITY / DURABILIDAD Km
↑°C PERFORMANCE / RENDIMIENTO ↑°C
↓°C PERFORMANCE / RENDIMIENTO ↓°C
DRY / SECO
WET / MOJADO
FADE RESISTANCE / RESISTENCIA FADE
FEEL / TACTO

### SEMI METAL COMPOUND
- Multifunctional compound without FADE effect.
- Minimum runner up time.

### COMPUESTO SEMI METÁLICO
- Compuesto polivalente sin efecto FADE.
- Mínimo tiempo de rodaje.

### MESCOLA SEMI METALLICA
- Mescola polivalente senza effetto FADE.
- Minimo tempo di rodaggio.

### COMPOSÉ SEMI MÉTALLIQUE
- Polyvalent composé sans effet FADE.
- Minimum temps du tournage.

## SCOOTER G1050

Scooter Off-Road Street Sport&GP
Front Rear | Front Rear | Front Rear | Front Rear

DURABILITY / DURABILIDAD Km
↑°C PERFORMANCE / RENDIMIENTO ↑°C
↓°C PERFORMANCE / RENDIMIENTO ↓°C
DRY / SECO
WET / MOJADO
FADE RESISTANCE / RESISTENCIA FADE
FEEL / TACTO

### BRAKE PAD SEMI METAL SPECIFIC FOR SCOOTER
- Excellent performance / price.
- Optimal performance in all conditions.

### PASTILLA SEMI METÁLICA ESPECÍFICA PARA SCOOTER
- Excelente relación prestación / precio.
- Funcionamiento óptimo en todo tipo de condiciones.

### PASTIGLIA SEMI METALLICA SPECIFICA PER SCOOTER
- Eccellente prestazione / prezzo.
- Prestazioni ottimali in tutte le condizioni.

### PLAQUETTE SEMI MÉTALLIQUE SPÉCIFIQUE POUR SCOOTER
- Excellente performance / prix.
- Performance optimale dans toutes les conditions.

## TRIAL TOP G1805

Scooter Off-Road Street Sport&GP
Front Rear | Front Rear | Front Rear | Front Rear

DURABILITY / DURABILIDAD Km
↑°C PERFORMANCE / RENDIMIENTO ↑°C
↓°C PERFORMANCE / RENDIMIENTO ↓°C
DRY / SECO
WET / MOJADO
FADE RESISTANCE / RESISTENCIA FADE
FEEL / TACTO

### BRAKE PAD SPECIFIC FOR TRIAL
- Excellent initial bite.
- Very little rotor wear.

### PASTILLA ESPECÍFICA PARA TRIAL
- Excelente mordiente inicial.
- Mínimo desgaste en el disco de freno.

### PASTIGLIA SPECIFICA PER TRIAL
- Eccellente mordente iniziale.
- Minima usura del disco freno.

### PLAQUETTE SPÉCIFIQUE POUR TRIAL
- Excellente mordant initial.
- Usure minimale du disque de frein.

## SINTERED G1380

Scooter Off-Road Street Sport&GP
Front Rear | Front Rear | Front Rear | Front Rear

DURABILITY / DURABILIDAD Km
↑°C PERFORMANCE / RENDIMIENTO ↑°C
↓°C PERFORMANCE / RENDIMIENTO ↓°C
DRY / SECO
WET / MOJADO
FADE RESISTANCE / RESISTENCIA FADE
FEEL / TACTO

### BRAKE PAD SINTERED SPECIFIC FOR SCOOTER
- Very low noise.
- Long durability.

### PASTILLA SINTERIZADA ESPECÍFICA PARA SCOOTER
- Muy bajo nivel de ruido.
- Larga durabilidad.

### PASTIGLIA SINTERIZZATO SPECIFICA PER SCOOTER
- Molto basso rumore.
- Lunga durata.

### PLAQUETTE MÉTAL FRITTÉ SPÉCIFIQUE POUR SCOOTER
- Très faible bruit.
- Longue durée.



Comparative values between GALFER compounds | Valores comparativos entre compuestos GALFER | Valori comparativi tra composti GALFER | Valeurs comparatives entre les composés GALFER.

## SINTERED METAL COMPOUND

- **G1370**: suitable for front wheel.
- **G1371**: suitable for rear wheel.

## COMPUESTO METAL SINTERIZADO

- **G1370**: aptas para rueda delantera.
- **G1371**: aptas para rueda trasera.

## MESCOLA METALLO SINTERIZZATO

- **G1370**: adatto per la ruota anteriore.
- **G1371**: adatto per la ruota posteriore.

## COMPOSÉ DE MÉTAL FRITTÉ

- **G1370**: recommandée pour la roue avant.
- **G1371**: recommandée pour la roue arrière.

DURABILITY / DURABILIDAD Km
↑°C PERFORMANCE / RENDIMIENTO ↑°C
↓°C PERFORMANCE / RENDIMIENTO ↓°C
DRY / SECO
WET / MOJADO
FADE RESISTANCE / RESISTENCIA FADE / FADE
FEEL / TACTO

## SINTERED G1370-71

Scooter Off-Road Street Sport&GP
Front Rear | Front Rear | Front Rear | Front Rear

## BRAKE PAD SPECIFIC FOR OFF-ROAD

- **G1396**: suitable for off-road motorcycles.
- **G1397**: suitable for Quads/ATV.

## PASTILLA ESPECÍFICA PARA OFF-ROAD

- **G1396**: aptas para motos de campo.
- **G1397**: aptas para Quads/ATV.

## PASTIGLIE SPECIFICA PER OFF-ROAD

- **G1396**: adatto per moto off-road.
- **G1397**: adatto per Quads/ATV.

## PLAQUETTE SPÉCIFIQUE POUR OFF-ROAD

- **G1396**: recommandée pour les motos de tout terrain.
- **G1397**: recommandée pour les Quads/ATV.

DURABILITY / DURABILIDAD Km
↑°C PERFORMANCE / RENDIMIENTO ↑°C
↓°C PERFORMANCE / RENDIMIENTO ↓°C
DRY / SECO
WET / MOJADO
FADE RESISTANCE / RESISTENCIA FADE / FADE
FEEL / TACTO

## SINTERED G1396-97

Scooter Off-Road Street Sport&GP
Front Rear | Front Rear | Front Rear | Front Rear

## SPORTIVE DRIVING

- Advanced ceramic metal compound.
- Suitable for use on road and circuit (front).

## CONDUCCIÓN DEPORTIVA

- Avanzado compuesto cerámico metálico.
- Aptas para carretera y circuito (delantera).

## GUIDA SPORTIVA

- Composto ceramico-metallico di ultima generazione.
- Adatto per uso agonistico anche in circuito (sul freno anteriore).

## CONDUITE SPORTIVE

- Matériau céramique métallique de haute performance.
- Recommandée pour conduite routière et circuit (roue avant).

DURABILITY / DURABILIDAD Km
↑°C PERFORMANCE / RENDIMIENTO ↑°C
↓°C PERFORMANCE / RENDIMIENTO ↓°C
DRY / SECO
WET / MOJADO
FADE RESISTANCE / RESISTENCIA FADE / FADE
FEEL / TACTO

## SINTERED G1375

Scooter Off-Road Street Sport&GP
Front Rear | Front Rear | Front Rear | Front Rear

## COMPETITION USE

- Maximum brake power.
- Great modulation and excellent feel.

## USO EN COMPETICIÓN

- Máxima potencia de frenado.
- Gran modulabildad y excelente tacto.

## USO IN COMPETIZIONE

- Massima potenza di frenata.
- Grande modularita e controllo della frenata.

## UTILISATION EN COMPÉTITION

- Puissance de freinage maximale.
- Excellent souplesse et tact lors du freinage.

DURABILITY / DURABILIDAD Km
↑°C PERFORMANCE / RENDIMIENTO ↑°C
↓°C PERFORMANCE / RENDIMIENTO ↓°C
DRY / SECO
WET / MOJADO
FADE RESISTANCE / RESISTENCIA FADE / FADE
FEEL / TACTO

## GP G1003 | GP G1300

Scooter Off-Road Street Sport&GP
Front Rear | Front Rear | Front Rear | Front Rear

The "Disc Wave®" represents the best example of research and development by Galfer. Laser cut, stainless steel and high carbon content. There is a direct application of competitive technology for any user. Direct replacement system that does not require brackets or any extra parts, it bolts just like a stock disc would. The "Disc Wave®" is an intellectual property of Galfer Industries SA, patented in Europe and America.

General features:
· Lower weight of the unsprung masses.
· More braking power.
· Better heat dissipation.
· Low working temperature.
· Less tendency to warp.
· Excellent resistance to corrosion.
· Stainless steel high carbon content.
· Anodized or chromed high resistence aluminium (7075 T6 - 6082 T6) or stainless steel carrier.

Los discos de freno "Disc Wave®" suponen la mejor expresión del trabajo en investigación y desarrollo por parte de Galfer. Cortados en láser a partir de acero inoxidable de alto contenido en carbono, suponen la aplicación directa de una tecnología de la alta competición al alcance de cualquier usuario. Reemplazan a los discos originales sin necesidad de adaptación o manipulación. El "Disc Wave®" es una propiedad intelectual de Industrias Galfer SA, patentada en Europea y America.

Características principales:
· Menor peso de las masas no suspendidas.
· Mayor potencia de frenada.
· Mejor capacidad de disipación del calor.
· Menor temperatura de trabajo.
· Menor tendencia a la deformación.
· Excelente resistencia a la corrosión.
· Acero inoxidable de alto contenido en carbono.
· Núcleo anodizado o cromado, en aluminio de alta resistencia (7075 T6 - 6082 T6) o en acero inoxidable.

I dischi "Disc Wave®" rappresentano l'esempio migliore di Ricerca e Sviluppo di Galfer. I dischi Galfer vengono prodotti con macchine a taglio laser utilizzando la miglior qualità di acciaio inossidabile ad alto contenuto di carbonio. Le tecnologie di produzione derivano direttamente dalle competizioni e rese disponibili a tutti gli utenti. Il montaggio non richiede staffe o parti supplementari e sono compatibili ai ricambi originali. Il disco freno "Disc Wave®" è una proprietà intellettuale di Industrias Galfer SA protetta da brevetto in Europa ed America.
Caratteristiche principali:
· Minor peso delle masse non sospese.
· Maggior potenza frenante.
· Miglior dissipazione del calore.
· Minor temperatura d'utilizzo.
· Una minore tendenza a deformarsi.
· Eccellente resistenza alla corrosione.
· Acciaio inossidabile ad alto contenuto di carbonio.
· Mozzo anodizzato o cromato in lega di alluminio ad alta resistenza ergal (7075 T6 - 6082 T6) o in acciaio inossidabile.

Les disques de frein "Disc Wave®" sont le meilleur exemple des prouesses techniques du département de Recherche & Développement de Galfer. Découpés par laser dans un acier inoxydable avec forte teneur en carbone, ils supposent l'application d'une technologie issue de la compétition pour tous les usagers. Ils remplacent les disques d'origine sans nécessité d'adaptation ou de transformation. Les disques de frein "Disc Wave®" sont la propriété intellectuelle de Industrias Galfer SA et sont protegés par un brevet en Europe et en Amérique.
Caractéristiques principales:
· Moins de poids des masses non suspendues.
· Une plus grande puissance de freinage.
· Une meilleure capacité de dissipation de la chaleur.
· Une faible température de travail.
· Moins tendance à se déformer.
· Excellente résistance à la corrosion.
· Acier inoxydable à forte densité de carbone.
· Frette centrale anodisée ou chromée avec aluminium de haute résistance (7075 T6 - 6082 T6) ou avec acier inoxydable.

# WHY DISC WAVE DESIGN?
# ¿PORQUÉ UN DISEÑO DE DISCO WAVE?

Disc wave THE ORIGINAL WAVE

- **-25%** WEIGHT REDUCTION / REDUCCIÓN DE PESO
- BETTER COOLING / MEJOR REFRIGERACIÓN
- MORE BRAKING POWER / MÁS POTENCIA FRENANTE

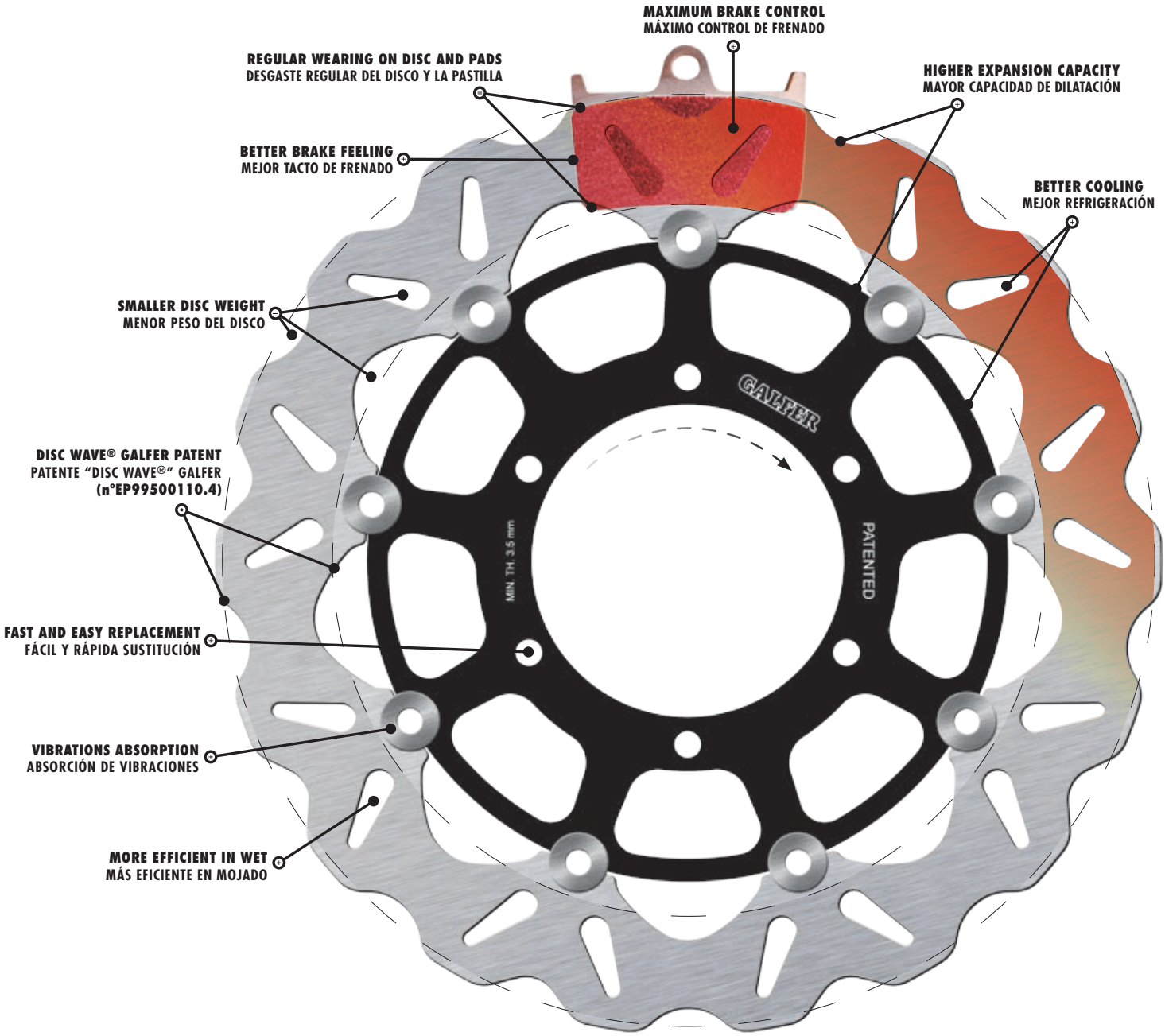


## DISC WAVE® GALFER

CONSTANT POWER AND FEELING
POTENCIA Y TACTO CONSTANTES

Regular wearing on disc and pads
Desgaste regular del disco y las pastillas

Double wave perimeter, homogeneous pressure in the surface of the pads
Doble perímetro ondulado, presión homogenea en la superficie de la pastilla

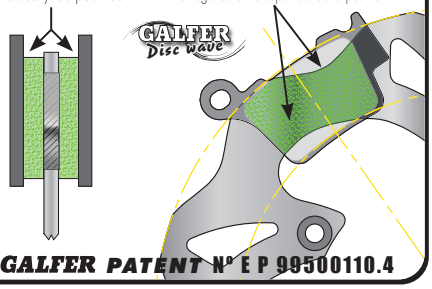


GALFER PATENT Nº E P 99500110.4

## WAVE FAKE IMITATIONS

LOSS OF POWER AND FEELING
PÉRDIDA DE POTENCIA Y TACTO

Irregular wearing on disc and pads
Desgaste irregular del disco y las pastillas

Outside wave perimeter and inside circular perimeter
Perímetro exterior ondulado e interior circular

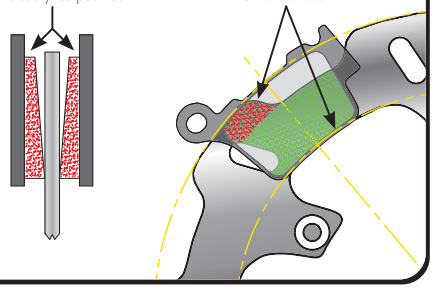

## TSUNAMI VERSION

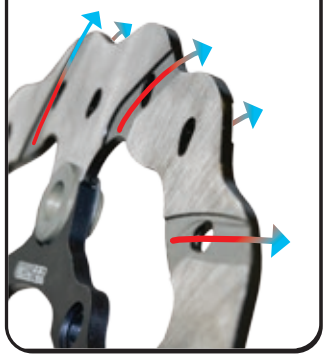

OE

# FIXED DISC WAVE® (W-WLL)
## DISC WAVE® FIJO (W-WLL)

- For all uses: Road and Off-Road.
- Manufactured in high carbon stainless steel, laser-cut.
- TÜV certified (KBA No. 61147)
- Cathaforesis-treated to prevent corrosion.
- Original equipment manufacturer.
- Improves braking performance when used with GALFER brake pads.

- Para todo tipo de uso: carretera y Off-Road.
- Fabricado en acero inoxidable de alto contenido en carbono mediante corte láser.
- Homologación TÜV (KBA n°61147)
- Tratamiento de cataforesis que evita la corrosión.
- Disco utilizado en primer equipo (OEM).
- Las prestaciones de frenada mejoran si se utilizan las pastillas de freno GALFER en el compuesto recomendado.

- Per tutti gli usi: strada ed Off-Road.
- Realizzato in acciaio inossidabile ad alto tenore di carbonio tagliato al laser.
- Certificazione TÜV (KBA n°61147)
- Trattamento di cataforesi per evitare la corrosione.
- Dischi di primo equipaggiamento (OEM).
- Ottimizza la frenata usando le pastiglie di freno GALFER della mescola raccomandata.

- Pour tous usages : route et off-road.
- Fabriqué en acier inoxydable à haute teneur en carbone par découpe laser.
- Homologation TÜV (KBA n°61147)
- Traitement anticorrosion par cataphorèse.
- Disque utilisé en équipement d'origine (OEM).
- Amélioration des performances de freinage grâce aux plaquettes de frein GALFER avec le composé recommandé.

# FIXED OVERSIZE DISC WAVE® (WS)
## DISC WAVE® FIJO SOBREMEDIDA (WS)

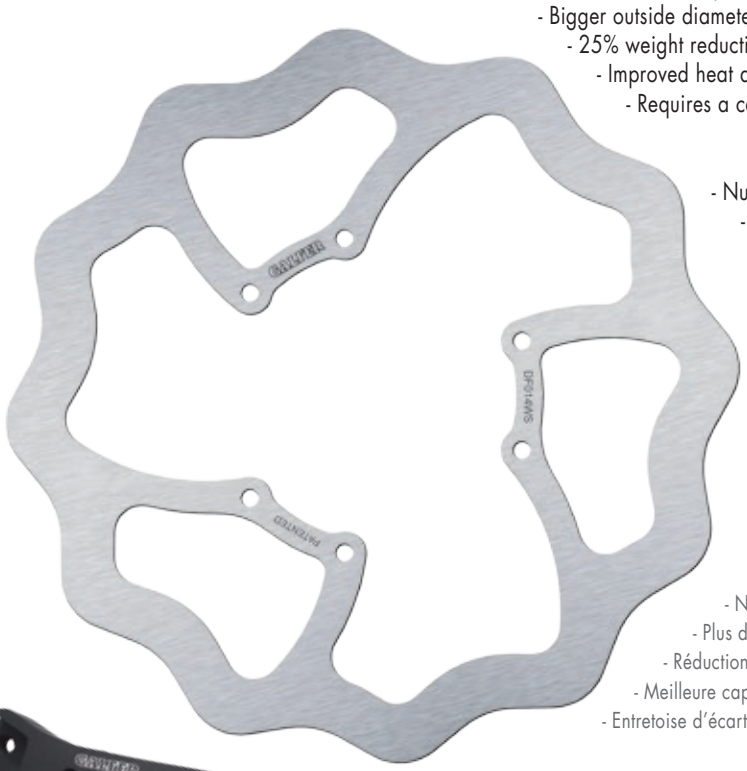

- New, exclusive, and specialized Wave design for Off-Road.
- Bigger outside diameter provides more braking power.
- 25% weight reduction to the original.
- Improved heat dissipation.
- Requires a caliper adapter bracket.

- Nuevo diseño exclusivo Wave especial para Off-Road.
- Más potencia de frenada gracias a su mayor diámetro exterior.
- Reducción del 25% del peso respecto al disco original.
- Mayor capacidad de disipación del calor.
- Precisa de separador de pinza de freno.

- Nuovo design esclusivo Wave speziale per Off-Road.
- Piú potenza di frenata grazie all'aumento del diametro esterno.
- Riduzione del 25% del peso rispetto al disco originale.
- Incremento della dissipazione del calore.
- Ha bisogno di un adattatore di pinza di freno.

- Nouvelle conception exclusive Wave pensée pour l'off-road.
- Plus de puissance de freinage grâce à l'augmentation du diamètre extérieur.
- Réduction de 25 % du poids par rapport au disque original.
- Meilleure capacité de dissipation de la chaleur.
- Entretoise d'écartement d'étrier de frein nécessaire.

for axial caliper



**OE:** Original equipment (original replacement disc) - **OE:** Equipo original (disco de remplazo del original)

# FIXED GROOVED DISC WAVE® (RW)

## DISC WAVE® FIJO RANURADO (RW)

OE

- Laser-cut and CNC high carbon stainless steel grooved rotor.
- The grooved rotor ensures water and dirt are better dispersed.
- 30% weight reduction to the original.
- Improved heat dissipation.

- Pista de freno ranurada fabricada mediante corte láser y CNC en acero inoxidable de alto contenido en carbono.
- Las ranuras de ambas caras de la pista de freno permiten una mejor evacuación del agua y la suciedad.
- Reducción del 30% del peso respecto al disco original.
- Mayor capacidad de disipación del calor.

- Fascia frenante scanalata realizzata in acciaio inossidabile ad alto tenore di carbonio tagliata al laser e CNC.
- Scanalature su entrambe facce della fascia frenante che permette migliorare l'evacuazione dell'acqua e dello sporco.
- Riduzione del 30% del peso rispetto al disco originale.
- Incremento della dissipazione del calore.

- Piste de freinage rainurée en acier inoxydable à haute teneur en carbone, fabriquée par découpe laser et CNC.
- Améliore l'évacuation de l'eau et de la saleté grâce aux rainures sur les deux faces du disque.
- Réduction de 30% du poids par rapport au disque original.
- Meilleure capacité de dissipation de la chaleur.

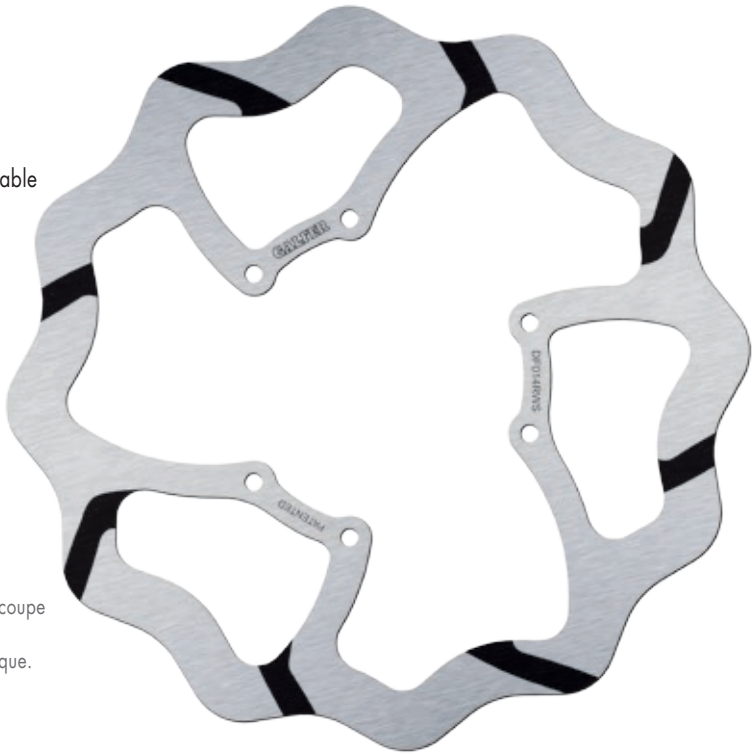


# FIXED GROOVED OVERSIZE DISC WAVE® (RWS)

## DISC WAVE® FIJO RANURADO SOBREMEDIDA (RWS)

- Laser-cut and CNC high carbon stainless steel grooved rotor.
- Bigger outside diameter provides more braking power.
- The grooved rotor ensures water and dirt are better dispersed.
- The weight reduction (unsprung mass reduction; gyroscopic effect minimization) improves handling of the bike.
- One of the best options in the market, widely used at the AMA SX and MXGP.
- Requires a caliper adapter bracket.

- Pista de freno ranurada fabricada mediante corte láser y CNC en acero inoxidable de alto contenido en carbono.
- Mayor potencia de frenada gracias su mayor diámetro exterior.
- Las ranuras de ambas caras de la pista de freno permiten una mejor evacuación del agua y la suciedad.
- Mejora del manejo de la moto gracias a la reducción de peso en masa no suspendida (minimizando el efecto giroscópico).
- Una de las mejores opciones del mercado, muy utilizado en el AMA SX y MXGP.
- Precisa de separador de pinza de freno.

- Fascia frenante scanalata realizzata in acciaio inossidabile ad alto tenore di carbonio tagliata al laser e CNC.
- Piú potenza di frenata grazie all'aumento del diametro esterno.
- Scanalature su entrambe facce della fascia frenante che permette migliorare l'evacuazione dell'acqua e dello sporco.
- Grazie alla riduzione di peso (riduzione di massa non sospesa - effetto giroscopico) si migliora il maneggio della motocicletta.
- Dei migliori del mercato, viene utilizzato all' AMA SX ed al MXGP.
- Ha bisogno di un adattatore di pinza di freno.

- Piste de freinage rainurée en acier inoxydable à haute teneur en carbone, fabriquée par découpe laser et CNC.
- Plus de puissance de freinage grâce à l'augmentation du diamètre extérieur.
- Améliore l'évacuation de l'eau et de la saleté grâce aux rainures sur les deux faces du disque.
- Améliore la maniabilité de la moto grâce à la réduction de poids en « masse non suspendue » (effet gyroscopique).
- Une des meilleures solutions, très utilisée dans les championnats AMA SX et MXGP.
- Entretoise d'écartement d'étrier de frein nécessaire.

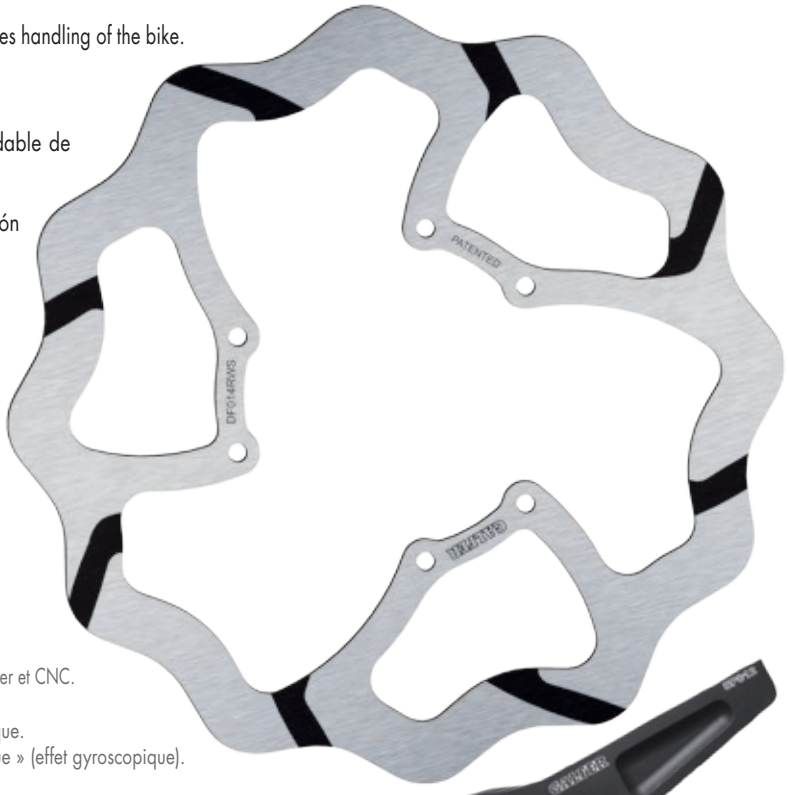


for axial caliper

OE

# FLOATING OFF-ROAD DISC WAVE® (FLW)
## DISC WAVE® FLOTANTE OFF-ROAD (FLW)

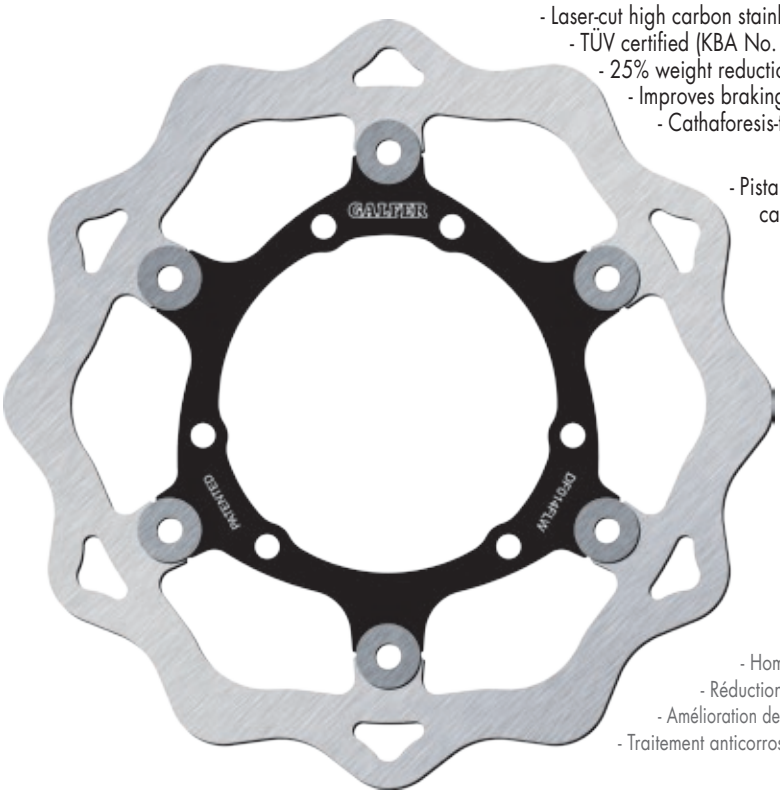


- Laser-cut high carbon stainless steel brake band and stainless steel core.
- TÜV certified (KBA No. 61148)
- 25% weight reduction to the original.
- Improves braking performance when used with GALFER brake pads.
- Cathaforesis-treated to prevent corrosion.

- Pista de freno fabricada mediante corte láser en acero inoxidable de alto contenido en carbono y núcleo en acero inoxidable.
- Homologación TÜV (KBA n°61148)
- Reducción del 25% del peso respecto al disco original.
- Las prestaciones de frenada mejoran con el uso de las pastillas de freno GALFER en el compuesto recomendado.
- Tratamiento de cataforesis que evita la corrosión.

- Fascia frenante realizzata in acciaio inossidabile ad alto tenore di carbonio tagliato al laser e nucleo interno in acciaio inossidabile.
- Certificazione TÜV (KBA n°61148)
- Riduzione del 25% del peso rispetto al disco originale.
- Ottimizza la frenata usando le pastiglie di freno GALFER della mescola raccomandata.
- Trattamento di cataforesi per evitare la corrosione.

- Piste de freinage rainurée en acier inoxydable à haute teneur en carbone, fabriquée par découpe laser et frette en acier inoxydable.
- Homologation TÜV (KBA n° 61148)
- Réduction de 25 % du poids par rapport au disque original.
- Amélioration des performances de freinage grâce aux plaquettes de frein GALFER dans le composé recommandé.
- Traitement anticorrosion par cataphorèse.

# FLOATING OVERSIZE DISC WAVE® (FLS)
## DISC WAVE® FLOTANTE SOBREMEDIDA (FLS)

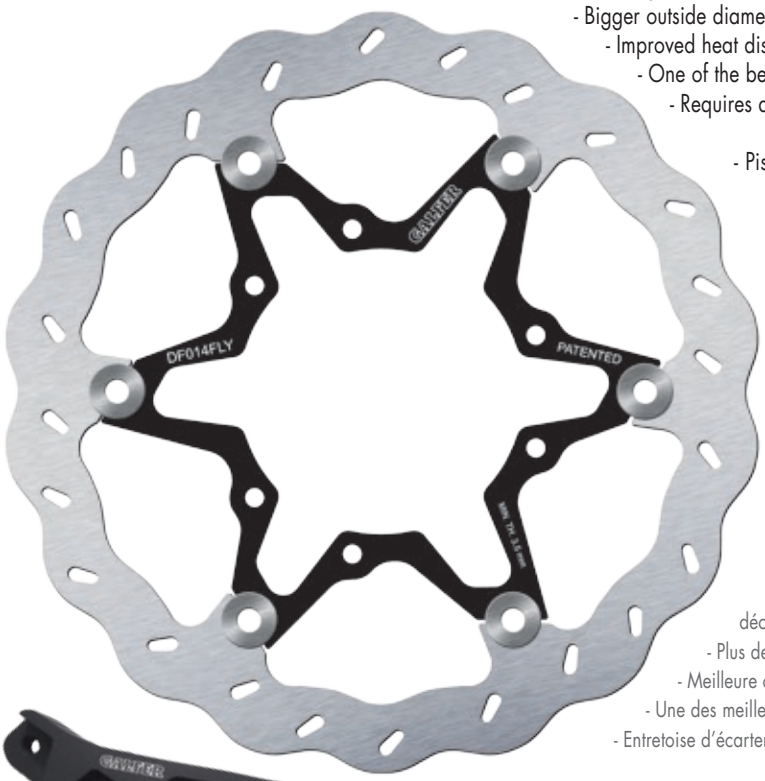


- Laser-cut high carbon stainless steel brake band and stainless steel core.
- Bigger outside diameter provides more braking power.
- Improved heat dissipation.
- One of the best options in the market, widely used at the AMA SX and MXGP.
- Requires a caliper adapter bracket.

- Pista de freno fabricada mediante corte láser en acero inoxidable de alto contenido en carbono y núcleo en acero inoxidable.
- Mayor potencia de frenada gracias a su mayor diámetro exterior.
- Mayor capacidad de disipación del calor.
- Una de las mejores opciones y muy utilizado en el AMA SX y MXGP.
- Precisa de separador de pinza de freno.

- Fascia frenante realizzata in acciaio inossidabile ad alto tenore di carbonio tagliato al laser e nucleo interno in acciaio inossidabile.
- Piú potenza di frenata grazie all'aumento del diametro esterno.
- Incremento della dissipazione del calore.
- Dei migliori del mercato, viene utilizzato all' AMA SX ed al MXGP.
- Ha bisogno di un adattatore di pinza di freno.

- Piste de freinage rainurée en acier inoxydable à haute teneur en carbone, fabriquée par découpe laser et frette en acier inoxydable.
- Plus de puissance de freinage grâce à l'augmentation du diamètre extérieur.
- Meilleure capacité de dissipation de la chaleur.
- Une des meilleures solutions, très utilisée dans les championnats AMA SX et MXGP.
- Entretoise d'écartement d'étrier de frein nécessaire.

for axial caliper



**OE:** Original equipment (original replacement disc) - **OE:** Equipo original (disco de remplazo del original)

# FLOATING OVERSIZE GROOVED DISC WAVE® (FRS)

## *DISC WAVE® FLOTANTE SOBREMEDIDA (FRS)*

- Outside diameter bigger than the original rotor resulting in a better braking performance.
- The grooved rotor ensures water and dirt are better dispersed.
- One of the best options in the market, widely used at the AMA SX and MXGP.
- The weight reduction (unsprung mass reduction; gyroscopic effect minimization) improves handling of the bike.
- Requires a caliper adapter bracket.

- Medida de diámetro externo superior al disco original mejorando la potencia de frenada considerablemente.
- Las ranuras de ambas caras de la pista de freno permiten una mejor evacuación del agua y la suciedad.
- Una de las mejores opciones del mercado, muy utilizado en el AMA SX y MXGP.
- Mejora el manejo de la moto gracias a la reducción de peso en masa no suspendida (minimizando el efecto giroscópico).
- Precisa de separador de pinza de freno.

- Diametro esterno superiore al disco originale: la potenza di frenata migliora notevolmente.
- Scanalature su entrambe facce della fascia frenante che permette migliorare l'evacuazione dell'acqua e dello sporco.
- Dei migliori del mercato, viene utilizzato all' AMA SX ed al MXGP.
- Grazie alla riduzione di peso (riduzione di massa non sospesa - effetto giroscopico) si migliora il maneggio della motocicletta.
- Ha bisogno di un adattatore di pinza di freno.

- Diamètre extérieur supérieur au disque original, pour une amélioration considérable de la puissance de freinage.
- Améliore l'évacuation de l'eau et de la saleté grâce aux rainures sur les deux faces du disque.
- Une des meilleures solutions, très utilisée dans les championnats AMA SX et MXGP.
- Améliore la maniabilité de la moto grâce à la réduction de poids en « masse non suspendue » (effet gyroscopique).
- Entretoise d'écartement d'étrier de frein nécessaire.

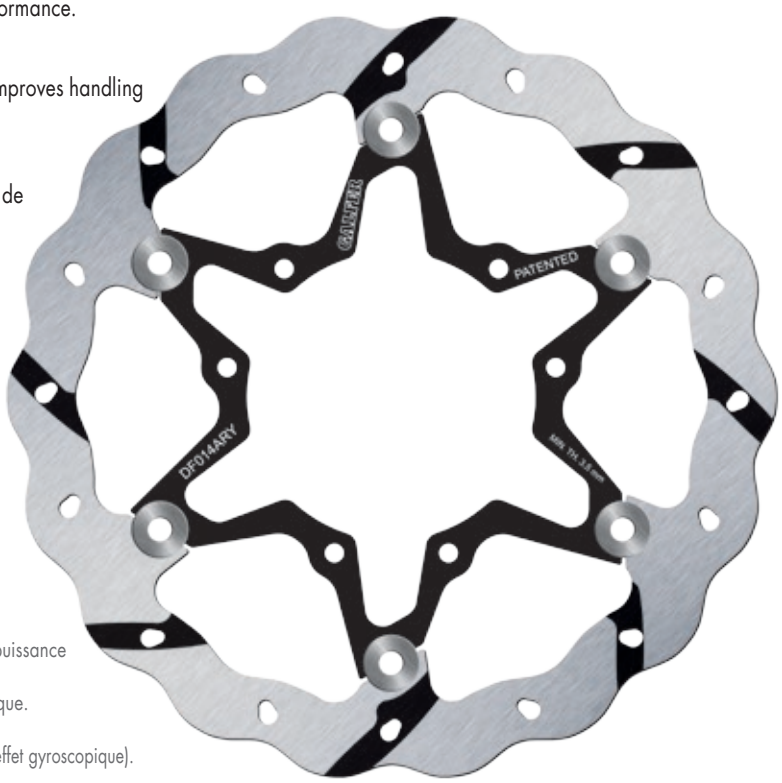


# FLOATING STREET DISC WAVE® (CW-CRW)

OE

## *DISC WAVE® FLOTANTE CARRETERA (CW-CRW)*

- Laser-cut high carbon stainless steel brake band and high-strength anodised aluminium core (7075 T6 - 6082 T6).
- TÜV certified (KBA No. 61148)
- 25% weight reduction to the original.
- The weight reduction (unsprung mass reduction; gyroscopic effect minimization) improves handling of the bike.
- Improved braking sensation thanks to the floating system.
- Cathaforesis-treated to prevent corrosion.
- Fit for daily use, track days, competition, etc.

- Pista de freno fabricada mediante corte láser en acero inoxidable de alto contenido en carbono y núcleo anodizado en aluminio de alta resistencia (7075 T6 - 6082 T6).
- Homologación TÜV (KBA n°61148)
- Reducción del 25% del peso respecto al disco original.
- Mejora del manejo de la moto gracias a la reducción de peso en masa no suspendida (minimizando el efecto giroscópico).
- Mejor sensación de frenada gracias al sistema flotante.
- Tratamiento de cataforesis que evita la corrosión.
- Válido tanto para uso diario como para uso en tandas, competición, etc.

- Fascia frenante realizzata in acciaio inossidabile ad alto tenore di carbonio tagliata al laser e nucleo interno anodizzato in alluminio ad alta resistenza (7075 T6 - 6082 T6).
- Certificazione TÜV (KBA n°61148)
- Riduzione del 25% del peso rispetto al disco originale.
- Grazie alla riduzione di peso (riduzione di massa non sospesa - effetto giroscopico) si migliora il maneggio della motocicletta.
- Grazie al sistema flottante la sensazione di frenata è migliore.
- Trattamento di cataforesi per evitare la corrosione.
- Valido sia per uso stradale sia per track days, competizione, ecc.

- Piste de freinage rainurée en acier inoxydable à haute teneur en carbone, fabriquée par découpe laser et frette en aluminium anodisé de haute résistance (7075 T6 - 6082 T6).
- Homologation TÜV (KBA n° 61148)
- Réduction de 25 % du poids par rapport au disque original.
- Améliore la maniabilité de la moto grâce à la réduction de poids en « masse non suspendue » (effet gyroscopique).
- Meilleure sensibilité de freinage grâce au système flottant.
- Traitement anticorrosion par cataphorèse.
- Adapté aussi bien à l'usage courant qu'aux événements sur circuit, à la compétition, etc.

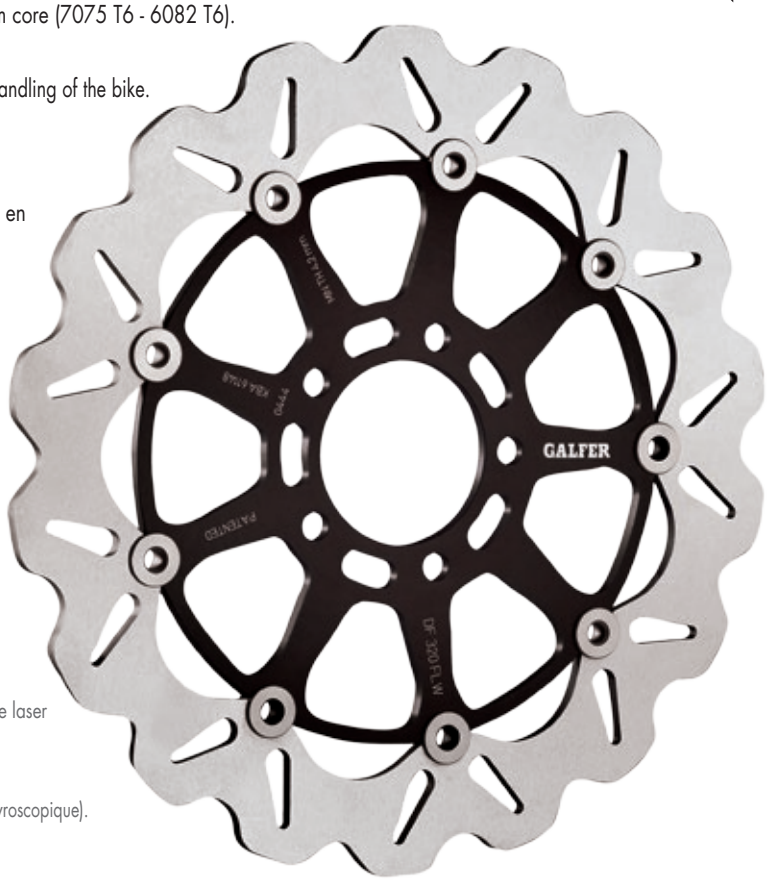


**OE:** Original equipment (original replacement disc) • **OE:** Equipo original (disco de remplazo del original)

| SHAPE<br>FORMA | TYPE<br>TIPO | EXT. SIZE<br>MEDIDA EXT. | CENTER<br>NÚCLEO | TRACK<br>PISTA | CODIFICATION<br>CODIFICACIÓN | IMAGE<br>IMAGEN | BRAKE PERFORMANCE<br>PRESTACIONES DE FRENADA |
|---|---|---|---|---|---|---|---|
| **Round Disc**<br>Disco Redondo | **Fixed**<br>Fijo<br>**(0)** | **Original**<br>Original | NA | **Holes**<br>Agujeros | **0** | | |
| **Disc Wave®**<br>Disco Wave | **Fixed**<br>Fijo<br>**(W)** | | | | **W** | | |
| | | | | **Solid**<br>Lleno | **WLL** | | |
| | | | | **Grooved**<br>Ranurado | **RW** | | |
| | | **Oversize**<br>Sobremedida<br>**(S)** | | **Holes**<br>Agujeros | **WS** | | |
| | | | | **Grooved**<br>Ranurado | **RWS** | | |
| | **Floating**<br>Flotante<br>**(F)** | **Original**<br>Original | **Steel**<br>Acero<br>**(FL)** | **Holes**<br>Agujeros | **FLW** | | |
| | | **Oversize**<br>Sobremedida<br>**(S)** | | | **FLS** | | |
| | | | | **Grooved**<br>Ranurado | **FRS** | | |
| | | **Original**<br>Original | **Aluminium**<br>Aluminio<br>**(CW)** | **Holes**<br>Agujeros | **CW** | | |
| | | | | **Grooved**<br>Ranurado | **CRW** | | |

Power / Potencia — Modulation / Progresividad — Dry / Seco — Wet / Mojado — Cooling / Refrigeración — Weight / Peso

| DESCRIPTION & CHARACTERISTICS<br>DESCRIPCIÓN Y CARACTERÍSTICAS | |
|---|---|
| **FIXED ROUND**<br>- Replacement for the original brake disc.<br>- Front and/or rear. | **FIJO REDONDO**<br>- Disco de freno reemplazo del original.<br>- Tren delantero y/o trasero. |
| **FIXED DISC WAVE®**<br>- Exclusive Wave design (front and/or rear).<br>- Weight reduction.<br>- TÜV certified (KBA). | **DISC WAVE® FIJO**<br>- Disco de freno reemplazo del original.<br>- Reducción del peso.<br>- Homologación TÜV (KBA). |
| **FIXED DISC WAVE® SOLID**<br>- Special for muddy conditions (rear).<br>- Prevents premature brake pads wear.<br>- Provides constant performance. | **DISC WAVE® FIJO SOLIDO**<br>- Especial para condiciones de barro (tren trasero).<br>- Previene el consumo prematuro de las pastillas.<br>- Rendimiento constante. |
| **FIXED DISC WAVE® GROOVED**<br>- Special for motocross (front and/or rear).<br>- Optimal mud and water dispersion.<br>- Weight reduction. | **DISC WAVE® FIJO RANURADO**<br>- Especial para motocross (tren delantero y/o trasero).<br>- Evacuación óptima del barro y el agua.<br>- Reducción del peso. |
| **FIXED DISC WAVE® OVERSIZE**<br>- Exclusive Wave design (front and/or rear).<br>- Improved braking power.<br>- Better disc cooling. | **DISC WAVE® FIJO SOBREMEDIDA**<br>- Mínimo peso.<br>- Mejora de la potencia de frenada.<br>- Mejor refrigeración del disco. |
| **FIXED DISC WAVE® GROOVED OVERSIZE**<br>- Special for motocross (front).<br>- Improved braking power and weight reduction.<br>- Optimal mud and water dispersion. | **DISC WAVE® FIJO RANURADO SOBREMEDIDA**<br>- Especial para motocross (tren delantero).<br>- Mejora de la potencia de frenada y reducción del peso.<br>- Evacuación óptima del barro y el agua. |
| **FLOATING DISC WAVE® STEEL CENTER**<br>- Weight reduction (front).<br>- TÜV certified (KBA).<br>- Better disc cooling. | **DISC WAVE® FLOTANTE NÚCLEO ACERO**<br>- Reducción del peso (tren delantero).<br>- Homologación TÜV (KBA).<br>- Mejor refrigeración del disco. |
| **FLOATING DISC WAVE® OVERSIZE STEEL CENTER**<br>- Weight reduction and more powerful braking.<br>- Better disc cooling (front). | **DISC WAVE® FLOTANTE SOBREMEDIDA NÚCLEO ACERO**<br>- Reducción del peso y frenada más potente.<br>- Mejor refrigeración del disco (tren delantero). |
| **FLOATING DISC WAVE® GROOVED OVERSIZE STEEL CENTER**<br>- Weight reduction and more powerful braking.<br>- Optimal mud and water dispersion (front). | **DISC WAVE® FLOTANTE RANURADO SOBREMEDIDA NÚCLEO ACERO**<br>- Reducción del peso y frenada más potente.<br>- Evacuación óptima de barro y agua (tren delantero). |
| **FLOATING DISC WAVE® ALUMINIUM CENTER**<br>- Special for road use (front).<br>- Weight reduction.<br>- TÜV certified (KBA). | **DISC WAVE® FLOTANTE NÚCLEO ALUMINIO**<br>- Especial para carretera (tren delantero).<br>- Reducción del peso.<br>- Homologación TÜV (KBA). |
| **FLOATING DISC WAVE® GROOVED ALUMINIUM CENTER**<br>- Weight reduction and more powerful braking.<br>- Optimal mud and water dispersion (front) | **DISC WAVE® FLOTANTE RANURADO NÚCLEO ALUMINIO**<br>- Reducción del peso y frenada más potente.<br>- Evacuación óptima de barro y agua (tren delantero) |

*Comparative values between GALFER discs* | Valores comparativos entre discos GALFER | *Valori comparativi tra dischi GALFER* | *Valeurs comparatives entre les disquess GALFER.*

FK Galfer metal hoses improved by more than 30% of the braking performance as they have a much lower expansion coefficient than traditional hoses. They are made of materials of the highest quality: braided stainless steel coated with PVC for the outside.

Key Features:
· Improves direct touch: strong, consistent and more accurate.
· Direct connection to the brake pump caliper.
· Increased speed of response.
· Do not corrode and resist the highest temperatures.
· Complete kits brake and clutch with 1, 2 or 3 tubes for each specific motorcycle model.
(tubes for off-road motorcycles include a protective sheath).
· Fittings and reusable supplied exploded.
· Tubes available in 3 colors (transparent, black and carbon) and fittings available in silver brass quality.

Los latiguillos metálicos FK Galfer mejoran en más de un 30% el rendimiento de la frenada ya que gozan de un coeficiente de dilatación mucho menor que los tubos tradicionales. Están realizados en materiales de la más alta calidad: acero inoxidable trenzado recubierto de PVC para el exterior.

Características principales:
· Mejora directa del tacto: firme, constante y más preciso.
· Conexión directa de bomba a pinza de freno.
· Aumento de la velocidad de respuesta.
· No se oxidan y resisten las más altas temperaturas.
· Kits completos de frenado y de embrague con 1, 2 ó 3 tubos específicos para cada modelo de moto (los tubos para motos off-road incluyen una vaina protectora).
· Racorería y tubería reusable suministrado en despiece.
· Tubería disponible en 3 colores (transparente, negro y carbono) y racorería disponible en calidad latón plata.

# IMPROVES BRAKING PERFORMANCE

Le tubazioni freno aereonautiche FK Galfer miglioranao il rendimento della frenata fino ad un 30% grazie alla maggiore resistenza alla dilatazione delle tubazioni tradizionali. Le tubazioni sono fatte con materiali della più alta qualità, una rete trecciata in acciaio inox il tutto ricoperto da una strato esterno in PVC.

Le carattersistiche principali di un FK Galfer sono:
· Miglioramento della sensibilità alla leva, frenata constante e precisa.
· Connessione diretta dalla pinza alla pompa freno.
· Risposta immediata, più rapida.
· Niente ossidazioni e maggior resistenza alle alte temperature.
· Grande assortimento, Kit freno e frizione completi con 1,2 o 3 tubi a seconda delle esigenze e della tipologia di moto (le tubazioni off-road includono anche una guaina prottettiva rigida).
· Raccorderia e tubazioni riutilizzabile.
· Tubazioni disponibili in 3 colorazioni (trasparente, nero e carbono) e qualità ottone silver di raccordi.

Les durites métalliques FK Galfer améliorent de plus de 30% la performance du freinage car elles offrent un coefficient de dilatation beaucoup plus faible que les durites classiques. Elles sont fabriquées à partir de matériaux d'excellente qualité: extérieur en acier inox tressé recouvert de PVC.

Caractéristiques principales:
· Améliore le tact, plus ferme, plus constant et plus précis.
· Connexion directe au maitre-cylindre de frein.
· Augmente la réactivité.
· Ne s'oxydent pas et résistent aux températures les plus élevées.
· Kits complets de Frein et embrayage avec 1, 2 ou 3 durites suivant la spécificité de chaque moto (les durites pour motos « off road » incluent une gaine de protection).
· Raccords de connexion réutilisables pouvant être fournis séparément.
· Gaines disponibles en 3 couleurs (transparente, noir e carbon) et qualité laiton argent raccords.

## KIT 1 LINE

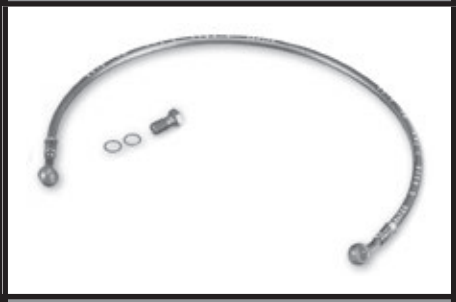

Scooter Off-Road Street Sport&GP
Front Rear Front Rear Front Rear Front Rear

## KIT 1 LINE (Off-Road)

Scooter Off-Road Street Sport&GP
Front Rear Front Rear Front Rear Front Rear

## KIT 2 LINES

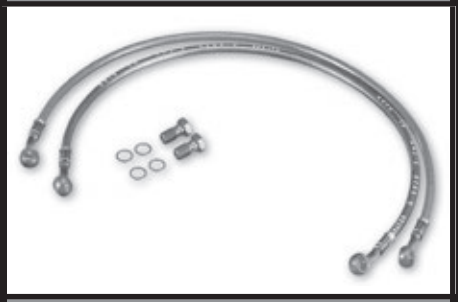

Scooter Off-Road Street Sport&GP
Front Rear Front Rear Front Rear Front Rear

## CLUTCH LINE (CL)

Scooter Off-Road Street Sport&GP
Front Rear Front Rear Front Rear Front Rear

## KIT 3 LINES

Scooter Off-Road Street Sport&GP
Front Rear Front Rear Front Rear Front Rear

## RACOR&TUBE K7

Scooter Off-Road Street Sport&GP
Front Rear Front Rear Front Rear Front Rear

Transparent • Transparente • Trasparente • Transparent

Black • Negro • Nero • Noir

Carbon • Carbono • Carbonio • Carbon

## SP SCOOTER

Scooter Off-Road Street Sport&GP
Front Rear Front Rear Front Rear Front Rear

## SP OFF-ROAD

Scooter Off-Road Street Sport&GP
Front Rear Front Rear Front Rear Front Rear

## SP SPORT

Scooter Off-Road Street Sport&GP
Front Rear Front Rear Front Rear Front Rear

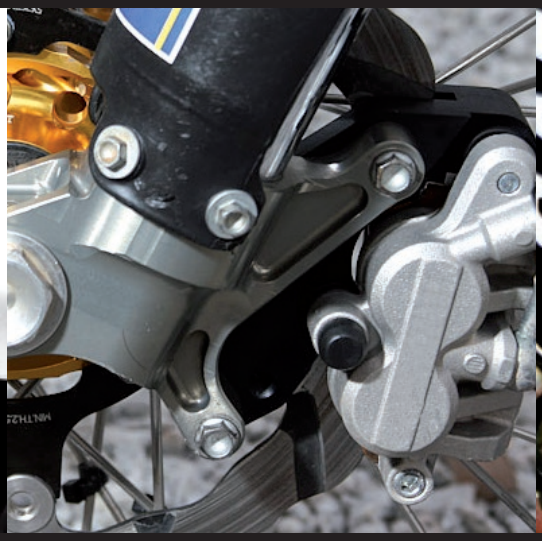

Necessary element for assembling oversized brake discs with original or special calipers. Aluminium 7075 T6 or 6082 T6 made. CNC mechanized and anodized.

Elemento imprescindible para el montaje de discos sobredimensionados con pinzas de origen o bien especiales. Fabricados en aluminio 7075 T6 ó 6082 T6. Mecanizados en CNC y anodizados.

Elemento indispensabile se si decide di utilizzare dischi freno maggiorati con pinze originali o aftermarket. Prodotte in alluminio 7075 T6 O 6082 T6. Lavorazione macchine a controllo numerico CNC e anodizzate.

Eléments indispensables pour le montage des disques oversized (grande taille) avec des étriers d'origine ou spéciaux. Fabriqués en aluminium 7075 T6 OU 6082 T6. Mécanisés en CNC et anodisé.

## KITS OFF-ROAD FRONT DISC OVERSIZED

## KITS ROAD FRONT & REAR DISC ORIGINAL OR OVERSIZED

The GALFER KIT are composed of many different combinations of "Disc Wave®" with other brake system elements like brake pads, metallic lines, calipers, brackets and other promotional accessories (stickers, gloves, cap, etc.)

Los GALFER KIT se componen de distintas combinaciones de "Discs Wave®" con otros elementos del sistema de freno, ya sean pastillas de freno, latiguillos de freno metálicos, pinzas, soportes para la pinza y otros accesorios promocionales como adhesivos, guantes, gorras, etc.

I KIT GALFER sono composti da varie combinazioni di "Disc Wave®" con altri componenti: pastiglie freni, tubi freno in metallo, pinze e supporti, accessori promozionali come adesivi, guanti, cappelli, etc.

Les KITS GALFER se composent de différentes combinaisons de "Disc Wave®" et autres composants du système de freinage, les jeux de plaquettes de frein, durites de frein en métal, des étriers, supports pour les étriers et autres accessoires promotionnels tels que des adhésifs, des gants, des casquettes, etc.

# BRAKE ACCESSORIES • ACCESORIOS DE FRENO
ACCESSORI FRENO • ACCESSOIRES DE FREIN

GALFER MOTO

## 95998A01
*BRAKE CLEANER*
LIMPIADOR DE FRENOS
*SPRAY PULIZIA FRENI*
*NETTOYANT DE FREIN*

## PV400
*VALVE PLUGS*
TAPONES DE VÁLVULAS
*CONFEZIONE RACCORDI*
*BOUCHONS DE VALVES*

## LF014
*BRAKE FLUID SUPER DOT 4*
LÍQUIDO DE FRENOS SUPER DOT 4
*LIQUIDO FRENI SUPER DOT 4*
*LIQUIDE DE FREIN SUPER DOT 4*

## FK D0915
*SENSOR ADAPTER*
ADAPTADOR SENSOR
*ADATTADORE SENSORE*
*ADAPTATEUR CAPTEUR*

## 95069001
*SHIM NOISE REDUCTION*
SHIM ANTI-RUIDO
*SHIM ANTI-RUMORE*
*SHIM RÉDUCTION DU BRUIT*

## MF G2165
*BRAKE SHOES*
MORDAZA DE FRENO
*GANASCE FRENO*
*MACHOIRES DE FREIN*

## NEW PADS PACKAGING SYSTEM • NUEVOS SISTEMA DE EMPAQUETADO PASTILLAS
NUOVO SISTEMA DI IMBALLAGGIO PASTIGLIE • NOUVEAU SYSTÈME D'EMBALLAGE PLAQUETTES

### PADS SET

12 PADS SETS

### PADS BOX

4 BOXES (48 PADS SETS)

### SHIPMENT BOX

### PALLET SYSTEM

1PALLET = 5 FILES
x
12 SHIPMENT BOXES
=
240 PADS BOX
=
2.880 PADS SETS (max.)

Galfer supplies the best brands. The quality and guarantee of our products are the reasons that explain why the most prestigious motorcycles and mopeds manufacturers rely on us from decades.

Galfer fabrica para las mejores marcas. La calidad y garantía de nuestros productos son el motivo por el que los fabricantes de motocicletas y ciclomotores más prestigiosos confían en nosotros desde hace décadas.

Galfer produce per le migliori marche. La qualità e la garanzia dei nostri prodotti sono la ragione per la quale i produttori di motocicli e ciclomotori più prestigiosi si affidano a noi.

Galfer fournit les meilleures marques. La qualité et la garantie de nos produits sont la raison pour laquelle les fabricants de motocyclettes et cyclomoteurs les plus prestigieux nous font confiance depuis des décennies.

GALFER MOTO

| Nº | DESCRIPTION • DESCRIPCIÓN<br>DESCRIZIONE • DESCRIPTION | SIZE • MEDIDA<br>MISURA • MESURE | LANGUAGE • IDIOMA<br>LINGUA • LANGUE | REF. |
|---|---|---|---|---|
| 1 | Hoja producto • *Product flyer* | 10 x 21 cm | ENG | 95035Y91 |
| 2 | Folleto Scooter • *Brochure Scooter* | 10 x 21 cm | ESP + ENG | 95035YD1 |
| | | | ITA + FRA | 95035YD2 |
| 3 | Folleto Off-Road • *Brochure Off-Road* | 10 x 21 cm | ESP + ENG | 95035YE1 |
| | | | ITA + FRA | 95035YE2 |
| 4 | Folleto Street • *Brochure Street* | 10 x 21 cm | ESP + ENG | 95035YF1 |
| | | | ITA + FRA | 95035YF2 |
| 5 | Folleto Sport&GP • *Brochure Sport&GP* | 10 x 21 cm | ESP + ENG | 95035YG1 |
| | | | ITA + FRA | 95035YG2 |
| 6 | Desplegable general • *General brochure* | 10 x 29,7 cm | ESP + ENG | 95035Y01 |
| 7 | Expositor para folletos • *Exhibitor for brochures* | 10 cm width | - | 95002Z01 |
| 8 | Presentación Galfer 8pg. • *Galfer presentation 8 pg.* | 22 x 30 cm | ESP + ENG | 95035IJS |
| 9 | Carpeta Galfer • *Galfer folder* | for A-4 sheets | - | 95035Q11 |
| 10 | Catálogo Galfer 2015-16 • *Galfer catalogue 2015-16* | 21 x 29,7cm (A-4) | ESP + ENG + ITA + FRA | 95035I01 |
| 11 | Lista de precios 2012 • *Price list 2012* | 21 x 29,7cm (A-4) | ESP + ENG +<br>ITA + FRA + GER | 95035A01 |
| 12 | Calendario 2012 • *2012 Calendar* | 40 x 63 cm | - | 95035K01 |
| 13 | GALFER poster calidades • *Qualities GALFER poster* | 44 x 68 cm | - | 95035L41 |
| 14 | Gafas de sol • *Sunglasses* | - | - | 95997E01 |
| 15 | Gorra GALFER Moto • *Cap GALFER Moto* | - | - | 95994HD4 |
| 16 | Guantes de trabajo • *Work gloves* | - | - | 95049001 |
| 17 | Funda cubre discos • *Discs rotors cover* | ø240-320mm | - | 95060001 |
| | | | - | 95060002 |
| 18 | Funda depósito líqudo frenos • *Brake fluid box cover* | - | - | 95068D01 |
| 19 | Boligrafo Galfer • *Galfer pen* | - | - | 95029H01 |
| 20 | Emblema de plástico • *Plastic emblem* | 12,6 x 3,6 cm | - | 95050001 |
| | Emblema de tela • *Cloth emblem* | 12,6 x 3,6 cm | - | 95050A01 |
| 21 | Adhesivo visera casco • *Helmet's visor sticker* | 9,5 x 1,5 cm | - | 95076M01 |
| 22 | Camiseta técnica GALFER Moto<br>*GALFER Moto technical T-shirt* | S | - | 95023G01 |
| | | M | | 95023G11 |
| | | L | | 95023G21 |
| | | XL | | 95023G31 |
| | | XXL | | 95023G41 |
| 23 | Bolsas de tela • *Non woven bags* | 30 x 40 cm | - | 95994LA3 |
| 24 | Adhesivos Galfer • *Galfer stickers* | 8,5 x 2 cm | - | 95076A01 |
| | | 11 x 3 cm | - | 95076B01 |
| | | 17 x 3,8 cm | - | 95076C01 |
| | | 100 x 30 cm | - | 95046M02 |
| 25 | Banderola GALFER • *Banner GALFER* | 300 x 80 cm | - | 95058A03 |
| 26 | Expositor 20 ganchos • *Holder 20 points* | 182 x 62 x 41 cm | - | 95002A01 |
| | Expositor 9 ganchos pastillas • *Holder pads 9 points* | 83 x 40 x 20 cm | - | 95002E01 |

2

3

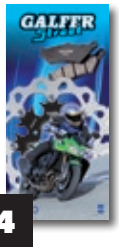

4

5

6

7

8

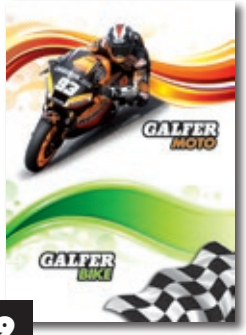

9

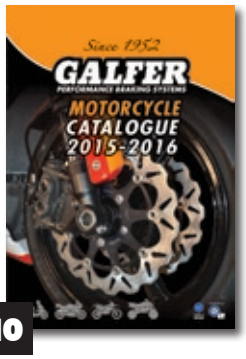

10

11

12

13

16

15

17

18

19

20

21

22

23

24

25

26

# NEW ECOMMERCE WEB PAGE • NUEVA PÁGINA WEB ECOMMERCE
## NUOVA PAGINA WEB ECOMMERCE • NOUVEAU ECOMMERCE PAGE WEB

GALFER MOTO

## FINDING / COMO LLEGAR

FROM THE WEBSITE **GALFERMOTO.COM**
THROUGH THE **CATALOGUE** MENU TAB
DESDE LA PÁGINA WEB **GALFERMOTO.COM**
A TRAVÉS DE LA PESTAÑA **CATÁLOGO**

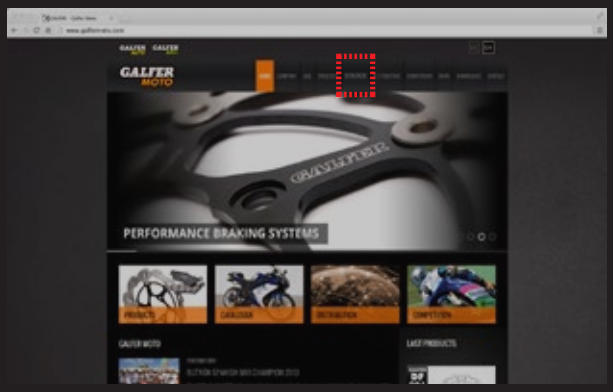


*redirect*
*redirección*

DIRECTLY AT **GALFERONLINE.ES**
DIRECTAMENTE EN **GALFERONLINE.ES**

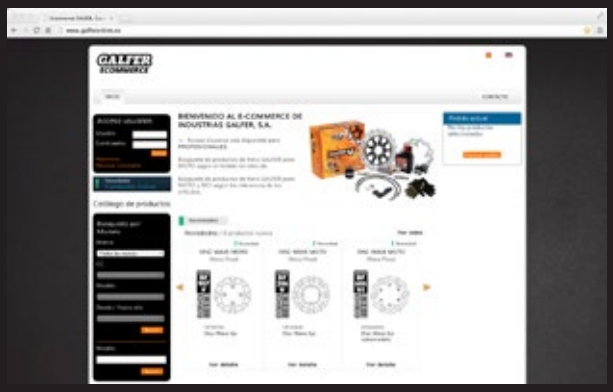

## SEARCHING / COMO BUSCAR

BY **MOTORCYCLE MODEL**
POR **MODELO DE MOTOCICLETA**

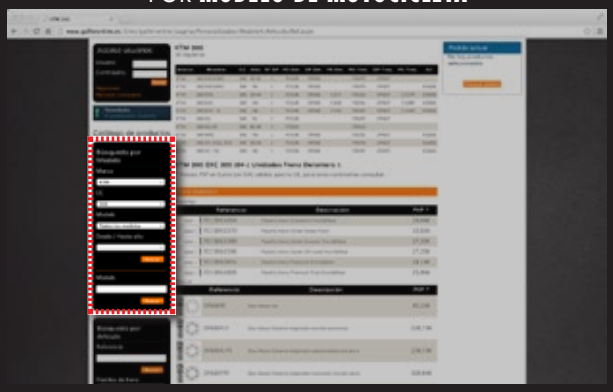

BY **ARTICLE REFERENCE**
POR **REFERENCIA DE ARTÍCULO**

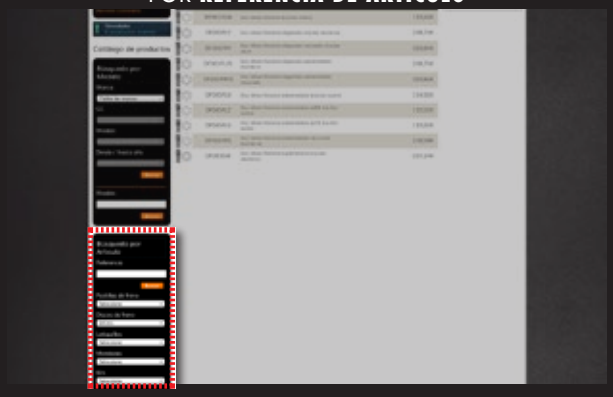

## LOGIN / COMO ACCEDER

EXCLUSIVE FOR **PROFESSIONAL** CUSTOMERS
EXCLUSIVO PARA CLIENTES **PROFESIONALES**

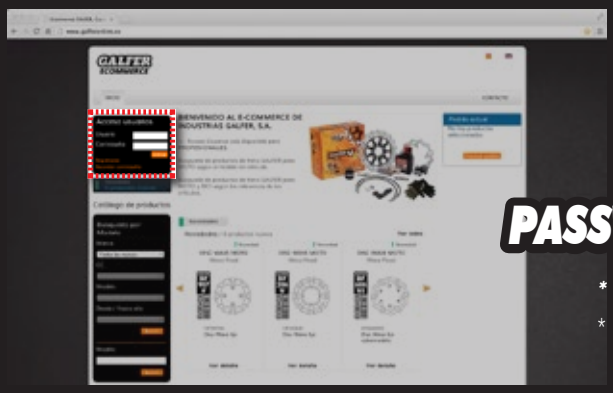

ACCESS DATA FOR:
DATOS DE ACCESO PARA:

**USER | USUARIO**

**PASSWORD | CONTRASEÑA***

** First access requests changing the password for security reasons.*
* El primer acceso al sistema se solicita modificar la contraseña por cuestiones de seguridad.

GALFER presents its new on-line catalogue and electronic commerce: **galferonline.es**
Here you can find the following advantages and benefits:
- The applications catalogue and all GALFER articles with pictures and technical data always updated.
- **Public acces to catalogue:** by motorcycle model or by article. Retail price suggested shown (excluding VAT).
- **Professional login:** on line orders, sales terms, orders history, etc...
- Latest new brake products featured on the homepage.

GALFER presenta su nuevo servicio de catálogo y comercio electrónico en Internet: **galferonline.es**
En él podrá encontrar las siguientes ventajas y utilidades:
- El catálogo de aplicaciones y todos los artículos GALFER con sus imágenes y datos técnicos siempre actualizados.
- **Acceso público en modo catálogo** para búsquedas por modelo de moto o por referencias de artículos con visualización del precios PVP (sin IVA).
- **Acceso restringido para profesionales** para realizar pedidos según sus condiciones de venta, ver el estado de sus pedidos, hacer consultas de su historial, etc...
- Las últimas novedades de productos de freno destacados en la página principal.

galferonline.es

# GALFER Racing

## CATALOGUE Sport&GP

**NEW RACING CATALOGUE**

**Download**
Racing Catalogue

www.galfer.eu/index.php/downloads-moto-eng

#28 ÁLEX CRIVILLÉ

#17 JOSÉ ANTONIO BUTRÓN

#42 ÁLEX RINS

#7 JAVIER GARCÍA VICO

#93 MARC MÁRQUEZ

#45 LAIA SANZ

#99 JORGE LORENZO

#20 FABIO QUARTARARO

#2 ORIOL MENA

# EMILIO ALZAMORA

#93 MARC MÁRQUEZ

#25 IVÁN CERVANTES

#18 DAVI MILLSAPS

#88 RICKY CARDÚS

EMMA BRISTOW

#8 HÉCTOR BARBERÁ

#17 JASON ANDERSON

#40 MAVERICK VIÑALES

#26 JOSEP GARCÍA

#12 ÁLEX MÁRQUEZ

#4 JOHNNY AUBERT

#31 LUIS CORREIA

#63 MIKE DI MEGLIO

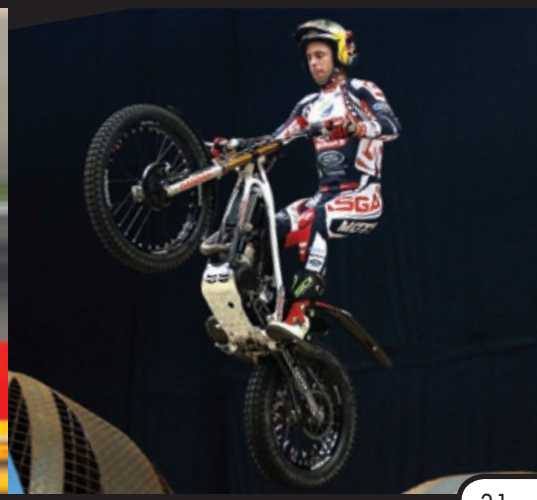
ADAM RAGA

GALFER
PERFORMANCE BRAKING SYSTEMS
1
USA 250 SX
WESTERN
2014
JASON ANDERSON
HUSQVARNA 450 AMA SX
Photo: Cubdy S.

PAULS JONASS
KTM MARCHETTI MXGP

GALFER MOTO

FD BRAKE PADS

DF DISC WAVE®

MF BRAKE SHOES

# Scooter Street

# UNDER <125cc.

(from year1990)

FOR ROAD GALFER Kit SEE PAGES 394-395

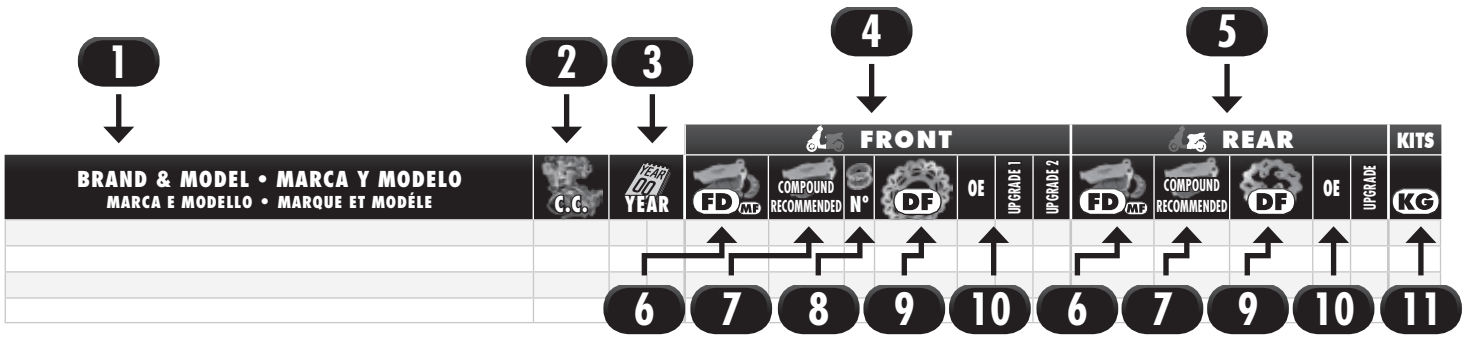


## DESCRIPTION • DESCRIPCIÓN • DESCRIZIONE • DESCRIPTION

**1**
**Brand and model of the motocycle**
**Marca y modelo de la moto**
Marca e modello del motociclo
Marque et modéle de la moto

**2**
**Cylinder capacity of the motocycle**
**Cilindrada de la moto**
Cilindrata del motociclo
Cylindrée de la moto

**3**
**Fabrication year of the motocycle**
**Año de fabricación de la moto**
Anno di produzione del motociclo
Année de fabrication de la moto

**4**
**Front zone of the motorcycle**
**Zona delantera de la moto**
Area anteriore del motociclo
Zone avant de la moto

**5**
**Rear zone of the motorcycle**
**Zona trasera de la moto**
Area posteriore del motociclo
Zone arrière de la moto

**6**
**Brake pads or shoes reference**
**Referencia de las pastillas o mordazas de freno**
Riferimento pastiglie o ganasce freno
Référence plaquettes ou mâchoires de frein

**7**
**Brake pads or shoes compound recommended for the motorcycle model**
**Compuesto recomendado de las pastillas o mordazas de freno para el modelo de moto**
Composti consigliata pastiglie o ganasce freno per il modello del motociclo
Composé recommandée plaquettes ou mâchoires de frein pour le modèle de moto

**8**
**Number of front brake discs**
**Número de discos de freno delanteros**
Numero di dischi freno anteriori
Nombre de disques de frein avant

**9**
**Brake disc reference**
**Referencia del disco de freno**
Riferimento disco freno
Référence disque de frein

**10**
**Brake disc options (OE: original equipment / Upgrade: more performance)**
**Opciones del disco de freno (OE: equipo original / Upgrade: más prestaciones)**
Opzioni disco freno (OE: attrezzatura originale / Upgrade: maggiori prestazioni)
Options disque de frein (OE: équipement original / Upgrade: plus de performance)

**11**
**Brake kit reference**
**Referencia del kit de freno**
Riferimento kit freno
Référence kit de frein

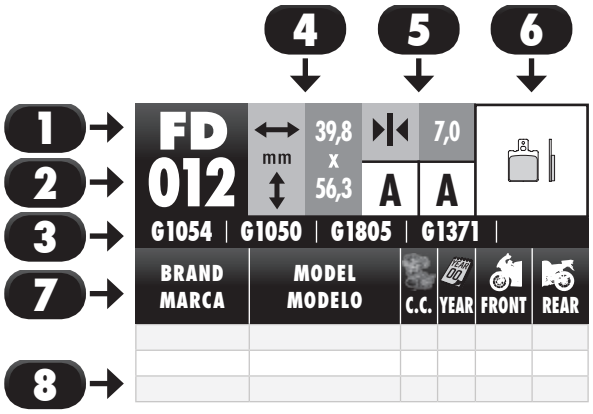


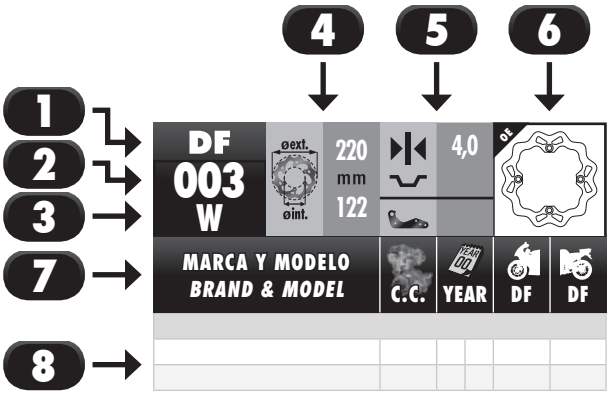


## DESCRIPTION • DESCRIPCIÓN • DESCRIZIONE • DESCRIPTION

**1**
**Product family (FD: Brake pads / DF: Brake disc / MF: Brake shoes)**
**Familia de producto (FD: Pastillas de freno / DF: Disco de freno / MF: Mordazas de freno)**
Famiglia di prodotti (FD: Pastiglia freno / DF: Disco freno / MF: Ganasce freno )
Famille de produit (FD: Plaquettes de frein / DF: Disque de frein / MF: Mâchoires de frein)

**2**
**Brake pads/disc/shoes reference**
**Referencia pastillas/disco/mordazas de freno**
Riferimento pastiglie/disco/ganasce freno
Référence plaquettes/disque/mâchoires de frein

**3**
**Brake pads compound or disc option**
**Compuesto pastillass de freno or opción de disco**
Mescola pastiglie o opzione de disco
Composé plaquettes ou option de disque

**4**
**Sizes (width x height) in millimeters**
**Medidas (ancho x alto) en milímetros**
Misure (larghezza x altezza) in millimetri
Mesures (largeur x hauteur) en millimetres

**5**
**Thickness in millimeters**
**Espesor en milímetros**
Spessore in millimetri
Epaisseur en millimetres

**6**
**Technical drawing free scale**
**Dibujo técnico a escala libre**
Illustrazione tecnica non a scala
Schéme technique échelle libre

**7**
**Brand, Model, cylinder capacity, fabrication year, front and rear brake reference of the motocycle**
**Marca, Modelo, cilindrada, año de fabricación, referencia anterior y posterior de la moto**
Marca, Modello, cilindrata, anno di produzione, riferimento anteriore e posteriore del motociclo
Marque, Modeéle, cylindrée, année de fabrication, référence avant et arrière de la moto

**8**
**Motorcycle list that mount this reference**
**Listado de modelos de moto que montan esta referencia**
Elenco modelli di motociclo che montano questo riferimento
Liste moto qui montent cette référence

| BRAND & MODEL • MARCA Y MODELO<br>MARCA E MODELLO • MARQUE ET MODÉLE | C.C. | YEAR | | FRONT FD MF | FRONT COMPOUND RECOMMENDED | FRONT N° | FRONT DF | FRONT OE | FRONT UPGRADE 1 | FRONT UPGRADE 2 | REAR FD MF | REAR COMPOUND RECOMMENDED | REAR DF | REAR OE | REAR UPGRADE | KITS KG |
|---|---|---|---|---|---|---|---|---|---|---|---|---|---|---|---|---|
| **ADIVA** | | | | | | | | | | | | | | | | |
| AD 125 | 125 | 09 | | FD188 | G1050 | 1 | | | | | FD220 | G1050 | | | | |
| **ADLY** | | | | | | | | | | | | | | | | |
| CAT 50 | 50 | 06 | | FD136 | G1050 | 1 | | | | | MF453 | G2165 | - | | | |
| JET 50 | 50 | 06 | | FD136 | G1050 | 1 | | | | | MF453 | G2165 | - | | | |
| MOTO FOX PLUS | 50 | 02 | | FD094 | G1050 | 1 | | | | | MF453 | G2165 | - | | | |
| MOTO SILVER FOX | 50 | 02 | | FD094 | G1050 | 1 | | | | | MF453 | G2165 | - | | | |
| NOBLE 50 | 50 | 05 | | FD094 | G1050 | 1 | | | | | MF453 | G2165 | - | | | |
| PANTHER 50 | 50 | 02 | | FD094 | G1050 | 1 | | | | | MF453 | G2165 | - | | | |
| PISTA 50 | 50 | 05 | | FD136 | G1050 | 1 | | | | | MF453 | G2165 | - | | | |
| ROAD RACER 50 | 50 | 04 | | FD136 | G1050 | 1 | | | | | MF453 | G2165 | - | | | |
| RS SUPERSONIC 50 | 50 | 06 | | FD094 | G1050 | 1 | | | | | FD094 | G1050 | | | | |
| SILVER FOX 50 | 50 | 06 | | FD094 | G1050 | 1 | | | | | MF453 | G2165 | - | | | |
| THUNDER BIKE 50 | 50 | 06 | | FD094 | G1050 | 1 | | | | | MF453 | G2165 | - | | | |
| PISTA 70 | 70 | 05 | | FD136 | G1050 | 1 | | | | | MF453 | G2165 | - | | | |
| ROAD RACER 90 | 90 | 04 | | FD136 | G1050 | 1 | | | | | MF453 | G2165 | - | | | |
| CAT 100 | 100 | 06 | | FD136 | G1050 | 1 | | | | | MF453 | G2165 | - | | | |
| JET 100 | 100 | 06 | | FD136 | G1050 | 1 | | | | | MF453 | G2165 | - | | | |
| NOBLE 100 | 100 | 05 | | FD094 | G1050 | 1 | | | | | MF453 | G2165 | - | | | |
| PANTHER 100 | 100 | 02 | | FD094 | G1050 | 1 | | | | | MF453 | G2165 | - | | | |
| ROAD RACER 100 | 100 | 04 | | FD136 | G1050 | 1 | | | | | MF453 | G2165 | - | | | |
| SILVER FOX 100 | 100 | 06 | | FD094 | G1050 | 1 | | | | | MF453 | G2165 | - | | | |
| THUNDER BIKE 100 | 100 | 06 | | FD094 | G1050 | 1 | | | | | MF453 | G2165 | - | | | |
| CAT 125 | 125 | 06 | | FD136 | G1050 | 1 | | | | | MF453 | G2165 | - | | | |
| NOBLE 125 | 125 | 05 | | FD094 | G1050 | 1 | | | | | MF453 | G2165 | - | | | |
| SUPER SONIC 125 B | 125 | 03 | | FD094 | G1050 | 1 | | | | | FD094 | G1050 | | | | |
| THUNDER BIKE 125 | 125 | 06 | | FD094 | G1050 | 1 | | | | | FD094 | G1050 | | | | |
| **AEON** | | | | | | | | | | | | | | | | |
| AERO 50 | 50 | 06 | | FD094 | G1050 | 1 | | | | | MF | | - | | | |
| NOX 50 | 50 | 06 | | FD094 | G1050 | 1 | | | | | MF | | - | | | |
| REGAL 50 | 50 | 06 | | FD094 | G1050 | 1 | | | | | MF | | - | | | |
| X FAST | 50 | 04 | | FD136 | G1050 | 1 | | | | | MF | | - | | | |
| AERO 100 | 100 | 06 | | FD094 | G1050 | 1 | | | | | MF | | - | | | |
| NOX 100 | 100 | 06 | | FD094 | G1050 | 1 | | | | | MF | | - | | | |
| PULSAR 100 | 100 | 06 | | FD094 | G1050 | 1 | | | | | MF | | - | | | |
| X FAST | 110 | 04 | | FD136 | G1050 | 1 | | | | | MF | | - | | | |
| NOX 125 | 125 | 06 | | FD094 | G1050 | 1 | | | | | MF | | - | | | |
| PULSAR 125 | 125 | 06 | | FD094 | G1050 | 1 | | | | | MF | | - | | | |
| URBAN 125 | 125 | 11 | | FD187 | G1050 | 1 | | | | | FD094 | G1050 | | | | |
| **ALPINA** | | | | | | | | | | | | | | | | |
| RENANIA VERONA 125 | 125 | 06 | | FD169 | G1050 | 1 | | | | | FD214 | G1050 | | | | |
| **APRILIA** | | | | | | | | | | | | | | | | |
| AF1 50 FUTURA | 50 | 90 | | FD084 | G1050 | 1 | | | | | FD048 | G1050 | | | | |
| AMICO 50 | 50 | 90 | 91 | MF630 | G2165 | | - | | | | MF630 | G2165 | - | | | |
| AMICO 50 GL,GLE,LX,SPORT LIFE,LX | 50 | 92 | | FD153 | G1050 | 1 | DF466 | W | | | MF630 | G2165 | - | | | |
| AREA 51 | 50 | 98 | | FD153 | G1050 | 1 | | | | | FD153 | G1050 | DF037 | W | RW | |
| CLASSIC 50 | 50 | 93 | | FD084 | G1050 | 1 | | | | | MF721 | G2165 | - | | | |
| COMPAY | 50 | 02 | | FD153 | G1050 | 1 | DF629 | W | RW | FLS | MF723 | G2165 | - | | | |
| EUROPA 50 | 50 | 91 | | FD084 | G1050 | 1 | | | | | FD048 | G1050 | | | | |
| GULLIVER 50 | 50 | 95 | 95 | FD153 | G1050 | 1 | DF629 | W | RW | FLS | MF630 | G2165 | - | | | |
| GULLIVER 50 LC | 50 | 96 | 97 | FD153 | G1050 | 1 | DF629 | W | RW | FLS | MF630 | G2165 | - | | | |
| HABANA | 50 | 98 | 01 | FD153 | G1050 | 1 | DF629 | W | RW | FLS | MF723 | G2165 | - | | | |
| HABANA CUSTOM | 50 | 98 | 01 | FD153 | G1050 | 1 | DF629 | W | RW | FLS | MF723 | G2165 | - | | | |
| Mc GULLIVER 50 | 50 | 98 | | FD153 | G1050 | 1 | DF629 | W | RW | FLS | MF630 | G2165 | - | | | |
| MOJITO 50 | 50 | 02 | | FD153 | G1050 | 1 | DF629 | W | RW | FLS | MF723 | G2165 | - | | | |
| MX SUPERMOTARD | 50 | 02 | | FD162 | G1054 | 1 | | | | | FD048 | G1050 | | | | |
| PEGASO 50 | 50 | 94 | | FD084 | G1050 | 1 | | | | | FD071 | G1054 | | | | |
| RALLY 50 | 50 | 94 | 95 | FD153 | G1050 | 1 | DF629 | W | RW | FLS | MF630 | G2165 | - | | | |
| RALLY 50 LC | 50 | 96 | | FD153 | G1050 | 1 | DF629 | W | RW | FLS | FD153 | G1050 | DF629 | W | RW | |
| RED ROSE 50 | 50 | 92 | | FD084 | G1050 | 1 | | | | | MF721 | G2165 | - | | | |
| RS 4 50 | 50 | 11 | | FD341 | G1050 | 1 | | | | | FD252 | G1050 | | | | |
| RS 50 | 50 | 96 | 98 | FD153 | G1050 | 1 | | | | | FD048 | G1050 | | | | |
| RS 50 | 50 | 07 | | FD220 | G1050 | 1 | | | | | FD065 | G1050 | | | | |
| RS 50 EXTREMA | 50 | 94 | 95 | FD171 | G1050 | 1 | | | | | FD048 | G1050 | | | | |
| RS 50 REPLICA | 50 | 99 | 06 | FD162 | G1054 | 1 | | | | | FD048 | G1050 | | | | |
| RS 50, ROSSI REPLICA | 50 | 98 | 98 | FD153 | G1050 | 1 | | | | | FD048 | G1050 | | | | |
| RX 50 | 50 | 90 | 91 | FD071 | G1054 | 1 | | | | | FD048 | G1050 | | | | |
| RX 50 | 50 | 92 | 92 | FD133 | G1050 | 1 | | | | | FD048 | G1050 | | | | |
| RX 50 | 50 | 93 | | FD162 | G1054 | 1 | | | | | FD048 | G1050 | | | | |
| SCARABEO 4 T | 50 | 04 | | FD234 | G1050 | 1 | DF612 | W | | | MF630 | G2165 | - | | | |
| SCARABEO 50 | 50 | 96 | 97 | FD153 | G1050 | 1 | DF609 | W | | | MF639 | G2165 | - | | | |
| SCARABEO de LUXE 50 | 50 | 98 | 01 | FD153 | G1050 | 1 | DF612 | W | | | FD153 | G1050 | DF629 | W | RW | |
| SCARABEO DITECH 50 | 50 | 02 | | FD153 | G1050 | 1 | DF612 | W | | | FD228 | G1050 | | | | |



**OE:** Original equipment (original replacement disc) • **OE:** Equipo original (disco de remplazo del original) For other models years previous to 1990 visit **www.galferonline.es** • Para otros modelos anteriores al año 1990 visitar **www.galferonline.es**
For consult TÜV (ABE) type approvals visit **www.galfermoto.com --> DOWNALOAD --> TÜV CERTIFICATIONS** • Para consultar las homologaciones TÜV (ABE) visitar **www.galfermoto.com --> DESCARGAS --> CERTIFICACIONES TÜV**

| BRAND & MODEL • MARCA Y MODELO • MARCA E MODELLO • MARQUE ET MODÉLE | C.C. | YEAR | | FRONT FD MF | FRONT COMPOUND RECOMMENDED | FRONT N° | FRONT DF | FRONT OE | FRONT UPGRADE 1 | FRONT UPGRADE 2 | REAR FD MF | REAR COMPOUND RECOMMENDED | REAR DF | REAR OE | REAR UPGRADE | KITS KG |
|---|---|---|---|---|---|---|---|---|---|---|---|---|---|---|---|---|
| SONIC | 50 | 98 | | FD153 | G1050 | 1 | DF466 | W | | | MF630 | G2165 | - | | | |
| SONIC GP | 50 | 98 | | FD153 | G1050 | 1 | DF466 | W | | | MF630 | G2165 | - | | | |
| SPICE SONIC GP | 50 | 98 | | FD153 | G1050 | 1 | DF466 | W | | | MF630 | G2165 | - | | | |
| SPORT CITY ONE 50 | 50 | 08 | | FD074 | G1050 | 1 | DF612 | W | | | MF | | - | | | |
| SPORT CITY STREET 50 | 50 | 09 | | FD277 | G1050 | 1 | | | | | MF | | - | | | |
| SR 50 | 50 | 93 | 93 | FD153 | G1050 | 1 | DF629 | W | RW | FLS | MF630 | G2165 | - | | | |
| SR 50 ACQUA | 50 | 95 | 96 | FD153 | G1050 | 1 | DF629 | W | RW | FLS | MF630 | G2165 | - | | | |
| SR 50 EUROPA, URBAND KID, VIPER | 50 | 94 | 94 | FD171 | G1050 | 1 | DF629 | W | RW | FLS | MF630 | G2165 | - | | | |
| SR 50 FACTORY | 50 | 05 | | FD153 | G1050 | 1 | DF629 | W | RW | FLS | FD228 | G1050 | DF648 | W | RW | |
| SR 50 R | 50 | 05 | | FD153 | G1050 | 1 | DF629 | W | RW | FLS | FD228 | G1050 | DF629 | W | RW | |
| SR 50 RACING CATALIZADA | 50 | 00 | | FD232 | G1050 | 1 | DF629 | W | RW | FLS | FD228 | G1050 | DF629 | W | RW | |
| SR 50 REPLICA | 50 | 92 | 92 | FD153 | G1050 | 1 | DF629 | W | RW | FLS | MF630 | G2165 | - | | | |
| SR 50 REPLICA | 50 | 93 | 93 | FD170 | G1050 | 1 | DF629 | W | RW | FLS | MF630 | G2165 | - | | | |
| SR 50 STEALTH | 50 | 97 | 99 | FD153 | G1050 | 1 | DF629 | W | RW | FLS | FD153 | G1050 | DF629 | W | RW | |
| SR 50 URBAN | 50 | 92 | 92 | FD153 | G1050 | 1 | DF629 | W | RW | FLS | MF630 | G2165 | - | | | |
| SR 50 VIPER | 50 | 92 | 92 | FD153 | G1050 | 1 | DF629 | W | RW | FLS | MF630 | G2165 | - | | | |
| SR 50 VIPER | 50 | 94 | 94 | FD171 | G1050 | 1 | DF629 | W | RW | FLS | MF630 | G2165 | - | | | |
| SR 50 WWW | 50 | 97 | 99 | FD153 | G1050 | 1 | DF629 | W | RW | FLS | FD153 | G1050 | DF629 | W | RW | |
| TUAREG RALLY 50 | 50 | 90 | | FD071 | G1054 | 1 | | | | | FD048 | G1050 | | | | |
| TUAREG WIND 50 | 50 | 90 | | FD071 | G1054 | 1 | | | | | MF | | - | | | |
| TUONO 50 | 50 | 03 | | FD162 | G1054 | 1 | | | | | FD048 | G1050 | | | | |
| SCARABEO 70 | 70 | 94 | | FD153 | G1050 | 1 | DF609 | W | | | MF630 | G2165 | - | | | |
| CLASSIC 80 | 80 | 93 | | FD084 | G1050 | 1 | | | | | MF721 | G2165 | - | | | |
| SCARABEO 100 | 100 | 00 | 03 | FD153 | G1050 | 1 | DF612 | W | | | MF630 | G2165 | - | | | |
| SCARABEO 100 4T | 100 | 04 | | FD234 | G1050 | 1 | DF612 | W | | | MF630 | G2165 | - | | | |
| AF 1 125 FUTURA | 125 | 90 | | FD118 | G1050 | 1 | | | | | FD012 | G1050 | | | | |
| ARRECIFE 125 | 125 | 03 | 05 | FD245 | G1050 | 1 | | | | | FD228 | G1050 | DF648 | W | RW | |
| ARRECIFE 125 SPRINT | 125 | 06 | | FD245 | G1050 | 1 | | | | | FD228 | G1050 | DF648 | W | RW | |
| ATLANTIC 125 | 125 | 03 | 05 | FD245 | G1050 | 1 | | | | | FD228 | G1050 | DF648 | W | RW | |
| ATLANTIC 125 SPRINT | 125 | 06 | | FD245 | G1050 | 1 | | | | | FD228 | G1050 | DF648 | W | RW | |
| COMPAY | 125 | 03 | | FD153 | G1050 | 1 | DF629 | W | RW | FLS | MF630 | G2165 | - | | | |
| EUROPA 125 | 125 | 91 | | FD118 | G1050 | 1 | | | | | FD012 | G1050 | | | | |
| HABANA | 125 | 00 | 02 | FD234 | G1050 | 1 | DF629 | W | RW | FLS | MF | | - | | | |
| HABANA CUSTOM | 125 | 00 | 02 | FD234 | G1050 | 1 | DF629 | W | RW | FLS | MF | | - | | | |
| LEONARDO 125 4T | 125 | 96 | 98 | FD153 | G1050 | 1 | DF612 | W | | | FD153 | G1050 | DF629 | W | RW | |
| LEONARDO 125 4T | 125 | 99 | | FD232 | G1050 | 1 | DF612 | W | | | FD234 | G1050 | DF629 | W | RW | |
| MOJITO 125 | 125 | 05 | | FD153 | G1050 | 1 | DF629 | W | RW | FLS | MF630 | G2165 | - | | | |
| PEGASO 125 | 125 | 91 | 92 | FD133 | G1050 | 1 | DF663 | FLW | | | FD135 | G1050 | DF632 | W | | |
| PEGASO 125 KAT | 125 | 93 | | FD118 | G1050 | 1 | DF663 | FLW | | | FD170 | G1050 | DF632 | W | | |
| RED ROSE 125 AE | 125 | 91 | | FD133 | G1050 | 1 | | | | | FD012 | G1050 | | | | |
| RS 125 | 125 | 06 | | FD367 | G1054 | 1 | DF660 | CW | CRW | | FD228 | G1050 | DF669 | W | | |
| RS 125 EXTREMA, REPLICA | 125 | 92 | 05 | FD118 | G1050 | 1 | DF660 | CW | CRW | | FD170 | G1050 | DF669 | W | | |
| RS 4 125 | 125 | 11 | | FD341 | G1050 | 1 | DF860 | W | | | FD252 | G1050 | | | | |
| RX 125 | 125 | 91 | 91 | FD089 | G1054 | 1 | DF617 | | | | FD135 | G1050 | DF887 | W | | |
| RX 125 | 125 | 92 | 92 | FD133 | G1050 | 1 | DF617 | | | | FD075 | G1050 | DF887 | W | | |
| RX 125 | 125 | 95 | | FD162 | G1054 | 1 | | | | | FD135 | G1050 | DF887 | W | | |
| RX 125 | 125 | 08 | | FD138 | G1050 | 1 | | | | | FD135 | G1050 | | | | |
| RX 125 (AJP) | 125 | 08 | | FD138 | G1050 | 1 | | | | | FD252 | G1050 | | | | |
| RX 125 C, CD | 125 | 93 | 94 | FD162 | G1054 | 1 | DF617 | | | | FD170 | G1050 | DF887 | W | | |
| SCARABEO 125 4T | 125 | 98 | 04 | FD074 | G1050 | 1 | DF671 | W | FLW | | FD228 | G1050 | DF609 | W | | |
| SCARABEO 125 4T | 125 | 05 | | FD245 | G1050 | 1 | DF671 | W | FLW | | FD228 | G1050 | | | | |
| SPORT CITY 125 | 125 | 04 | | FD074 | G1050 | 1 | DF671 | W | FLW | | FD228 | G1050 | DF612 | W | | |
| SPORT CITY ONE 125 | 125 | 08 | | FD074 | G1050 | 1 | DF612 | W | | | MF | | - | | | |
| SPORT PROT 125 | 125 | 92 | 94 | FD118 | G1050 | 1 | DF660 | CW | CRW | | FD170 | G1050 | | | | |
| SR 125 | 125 | 98 | | FD234 | G1050 | 1 | DF629 | W | RW | FLS | MF | | - | | | |
| TUAREG RALLY 125 | 125 | 91 | | FD133 | G1050 | 1 | DF617 | | | | FD135 | G1050 | DF887 | W | | |
| TUONO 125 | 125 | 03 | | FD118 | G1050 | 1 | DF660 | CW | CRW | | FD153 | G1050 | DF669 | W | | |
| **ATALA** | | | | | | | | | | | | | | | | |
| BYTE | 50 | 99 | | FD153 | G1050 | 1 | DF466 | W | | | MF | | - | | | |
| CAROSELLO | 50 | 99 | | FD084 | G1050 | 1 | DF609 | W | | | MF | | - | | | |
| HACKER AT 12 | 50 | 99 | | FD153 | G1050 | 1 | DF649 | W | | | MF | | - | | | |
| HACKER LC | 50 | 99 | | FD153 | G1050 | 1 | DF649 | W | | | MF | | - | | | |
| MASTER 4 | 50 | 94 | | FD071 | G1054 | 1 | | | | | MF | | - | | | |
| SKEGGIA | 50 | 99 | | FD153 | G1050 | 1 | DF649 | W | | | MF | | - | | | |
| **ATK** | | | | | | | | | | | | | | | | |
| BULL 50 | 50 | 94 | | FD086 | G1054 | 1 | | | | | FD086 | G1054 | | | | |
| BULLET 50 CN N | 50 | 94 | | FD086 | G1054 | 1 | | | | | FD086 | G1054 | | | | |
| COBRA 50 | 50 | 94 | | FD086 | G1054 | 1 | | | | | FD086 | G1054 | | | | |
| **BENELLI** | | | | | | | | | | | | | | | | |
| 49 X | 50 | 07 | | FD175 | G1050 | 1 | | | | | MF | | - | | | |
| BUNNY 50 | 50 | 95 | | FD079 | G1050 | 1 | | | | | MF | | - | | | |
| DEVIL 50 | 50 | 95 | | FD085 | G1050 | 1 | | | | | FD071 | G1054 | | | | |
| GT 491 | 50 | 98 | | FD153 | G1050 | 1 | DF649 | W | | | MF | | - | | | |

| BRAND & MODEL • MARCA Y MODELO<br>MARCA E MODELLO • MARQUE ET MODÉLE | C.C. | YEAR | | FRONT FD MF | FRONT COMPOUND RECOMMENDED | FRONT N° | FRONT DF | FRONT OE | FRONT UPGRADE 1 | FRONT UPGRADE 2 | REAR FD MF | REAR COMPOUND RECOMMENDED | REAR DF | REAR OE | REAR UPGRADE | KITS KG |
|---|---|---|---|---|---|---|---|---|---|---|---|---|---|---|---|---|
| K 2 | 50 | 98 | | FD153 | G1050 | 1 | DF649 | W | | | MF | | - | | | |
| K 2 LIQUID | 50 | 98 | | FD153 | G1050 | 1 | DF649 | W | | | MF | | - | | | |
| K 2 NAMUR | 50 | 98 | | FD153 | G1050 | 1 | DF649 | W | | | MF | | - | | | |
| MALA 50 | 50 | 13 | | FD153 | G1050 | 1 | | | | | MF | | - | | | |
| MASTER 4 50 | 50 | 95 | | FD071 | G1054 | 1 | | | | | MF | | - | | | |
| NAKED 50 | 50 | 98 | | FD153 | G1050 | 1 | DF649 | W | | | MF | | - | | | |
| PEPE | 50 | 98 | | FD153 | G1050 | 1 | | | | | MF | | - | | | |
| QUATTRO NOVE X | 50 | 09 | | FD095 | G1050 | 1 | | | | | MF | | - | | | |
| RACING 491 | 50 | 98 | | FD153 | G1050 | 1 | DF649 | W | | | FD200 | G1050 | DF649 | W | | |
| SPORT 491 | 50 | 98 | | FD153 | G1050 | 1 | DF649 | W | | | MF | | - | | | |
| SPRING 50 | 50 | 95 | | FD085 | G1050 | 1 | | | | | FD071 | G1054 | | | | |
| SUPERBIKE 491 | 50 | 98 | | FD153 | G1050 | 1 | DF649 | W | | | FD200 | G1050 | DF649 | W | | |
| DEVIL 80 | 80 | 95 | | FD085 | G1050 | 1 | | | | | FD071 | G1054 | | | | |
| K 2 BIPOSTO | 100 | 98 | | FD153 | G1050 | 1 | DF649 | W | | | MF | | - | | | |
| 666 | 125 | 98 | | FD068 | G1050 | 1 | | | | | FD220 | G1050 | | | | |
| ADIVA | 125 | 00 | | FD153 | G1050 | 1 | DF737 | W | | | FD263 | G1054 | | | | |
| HOBBY 125 | 125 | 13 | | FD187 | G1050 | 1 | | | | | FD187 | G1050 | | | | |
| MACIS 125 | 125 | 08 | | FD187 | G1050 | 1 | | | | | FD187 | G1050 | | | | |
| VELVET 125 | 125 | 98 | 10 | FD153 | G1050 | 1 | DF669 | W | | | FD153 | G1050 | DF649 | W | | |
| VELVET 125 | 125 | 11 | | FD162 | G1054 | 1 | | | | | FD153 | G1050 | | | | |
| **BETA** | | | | | | | | | | | | | | | | |
| ALP 50 | 50 | 94 | | FD065 | G1050 | 1 | | | | | FD102 | G1054 | | | | |
| AR-T | 50 | 03 | 04 | FD162 | G1054 | 1 | DF674 | W | FLW | | FD065 | G1050 | DF675 | W | | |
| AR-T | 50 | 05 | | FD162 | G1054 | 1 | DF744 | W | | | FD223 | G1054 | DF745 | W | | |
| ARK 50 | 50 | 96 | 96 | FD153 | G1050 | 1 | | | | | MF | | - | | | |
| ARK 50 LC - R | 50 | 97 | | FD153 | G1050 | 1 | DF649 | W | | | FD153 | G1050 | DF649 | W | | |
| CHRONO 50 | 50 | 94 | | FD153 | G1050 | 1 | DF629 | W | RW | FLS | MF630 | G2165 | - | | | |
| EIKON | 50 | 99 | | FD065 | G1050 | 1 | DF649 | W | | | FD065 | G1050 | DF649 | W | | |
| MINI TRIAL 50 | 50 | 09 | | FD224 | G1050 | 1 | | | | | FD224 | G1050 | | | | |
| MX 50 | 50 | 92 | | FD084 | G1050 | 1 | | | | | FD084 | G1050 | | | | |
| MX 50 ENDURO | 50 | 92 | | FD065 | G1050 | 1 | DF645 | CW | | | FD065 | G1050 | | | | |
| QUADRA | 50 | 94 | | FD153 | G1050 | 1 | DF649 | W | | | MF630 | G2165 | - | | | |
| RK6 50 | 50 | 94 | 98 | FD133 | G1050 | 1 | | | | | FD065 | G1050 | DF654 | | | |
| RK6T 50 | 50 | 99 | 01 | FD065 | G1050 | 1 | DF658 | W | | | FD065 | G1050 | | | | |
| RK6T 50 SUPERMOTARD | 50 | 99 | 01 | FD065 | G1050 | 1 | DF658 | W | | | FD065 | G1050 | | | | |
| RR ENDURO | 50 | 08 | | FD162 | G1054 | 1 | | | | | FD456 | G1054 | | | | |
| RR MOTARD | 50 | 08 | | FD162 | G1054 | 1 | | | | | FD456 | G1054 | | | | |
| RR-T | 50 | 99 | 01 | FD133 | G1050 | 1 | DF658 | W | | | FD065 | G1050 | DF646 | | | |
| RR-T | 50 | 02 | 04 | FD065 | G1050 | 1 | | | | | FD065 | G1050 | DF646 | | | |
| RR-T | 50 | 05 | | FD065 | G1050 | 1 | | | | | FD065 | G1050 | DF646 | | | |
| ST 50 | 50 | 94 | | FD065 | G1050 | 1 | | | | | FD102 | G1054 | | | | |
| TEMPO 50 | 50 | 94 | | FD084 | G1050 | 1 | DF629 | W | RW | FLS | MF630 | G2165 | - | | | |
| ZERO 50 | 50 | 94 | | FD065 | G1050 | 1 | | | | | FD102 | G1054 | | | | |
| ALP 125 | 125 | 06 | 07 | FD162 | G1054 | 1 | | | | | FD093 | G1054 | | | | |
| ALP 125 | 125 | 08 | | FD162 | G1054 | 1 | | | | | FD456 | G1054 | | | | |
| EIKON 125 4T | 125 | 99 | | FD153 | G1050 | 1 | DF612 | W | | | FD153 | G1050 | | | | |
| JONATHAN | 125 | 00 | | FD068 | G1050 | 1 | | | | | FD165 | G1054 | | | | |
| RR 125 4T | 125 | 06 | | FD162 | G1054 | 1 | | | | | FD456 | G1054 | | | | |
| RR ENDURO | 125 | 08 | | FD162 | G1054 | 1 | | | | | FD456 | G1054 | | | | |
| URBAN 125 | 125 | 08 | | FD162 | G1054 | 1 | | | | | FD456 | G1054 | | | | |
| ENDURO 125 | 125 | 07 | | FD341 | G1050 | 1 | | | | | FD065 | G1050 | | | | |
| **BMW** | | | | | | | | | | | | | | | | |
| C1 125 | 125 | 00 | | FD172 | G1054 | 1 | | | | | FD165 | G1054 | | | | |
| **BULTACO** | | | | | | | | | | | | | | | | |
| ASTRO | 50 | 00 | | FD133 | G1050 | 1 | DF674 | W | FLW | | FD065 | G1050 | DF698 | W | | |
| LOBITO | 50 | 99 | | FD133 | G1050 | 1 | DF674 | W | FLW | | FD065 | G1050 | DF698 | W | | |
| **CAGIVA** | | | | | | | | | | | | | | | | |
| CITY 50 | 50 | 93 | | FD149 | G1050 | 1 | DF018 | | | | MF630 | G2165 | - | | | |
| CUCCIOLO | 50 | 01 | | FD171 | G1050 | 1 | | | | | MF | | - | | | |
| K3 50 | 50 | 92 | | FD012 | G1050 | 1 | | | | | FD048 | G1050 | | | | |
| NAG 50 | 50 | 08 | | FD175 | G1050 | 1 | | | | | MF | | - | | | |
| NUVOLA | 50 | 00 | | FD171 | G1050 | 1 | | | | | MF | | - | | | |
| PASSING 50 | 50 | 95 | | FD188 | G1050 | 1 | DF018 | | | | | | | | | |
| PRIMA 50 | 50 | 92 | | FD151 | G1050 | 1 | | | | | FD152 | G1050 | | | | |
| STRADA PRIMA 50 | 50 | 92 | | FD118 | G1050 | 1 | | | | | FD048 | G1050 | | | | |
| SUPER CITY 50 | 50 | 92 | | FD151 | G1050 | 1 | | | | | FD152 | G1050 | | | | |
| W4-50 PRO ACTION | 50 | 92 | | FD012 | G1050 | 1 | | | | | FD048 | G1050 | | | | |
| PRIMA 75 | 75 | 92 | | FD151 | G1050 | 1 | | | | | FD152 | G1050 | | | | |
| SUPER CITY 80 | 80 | 92 | | FD151 | G1050 | 1 | | | | | FD152 | G1050 | | | | |
| BLUS 125 | 125 | 93 | | FD074 | G1050 | 1 | | | | | FD048 | G1050 | | | | |
| CUCCIOLO | 125 | 99 | | FD171 | G1050 | 1 | | | | | MF | | - | | | |
| K7 125 N90 | 125 | 91 | | FD089 | G1054 | 1 | | | | | FD075 | G1050 | | | | |
| MITO 125 EDDY | 125 | 93 | | FD068 | G1050 | 1 | DF660 | CW | CRW | | FD012 | G1050 | | | | |



**OE:** Original equipment (original replacement disc) • **OE:** Equipo original (disco de remplazo del original) For other models years previous to 1990 visit **www.galferonline.es** • Para otros modelos anteriores al año 1990 visitar **www.galferonline.es**
For consult TÜV (ABE) type approvals visit **www.galfermoto.com --> DOWNALOAD --> TÜV CERTIFICATIONS** • Para consultar las homologaciones TÜV (ABE) visitar **www.galfermoto.com --> DESCARGAS --> CERTIFICACIONES TÜV**

| BRAND & MODEL • MARCA Y MODELO<br>MARCA E MODELLO • MARQUE ET MODÉLE | C.C. | YEAR | | FRONT FD MF | FRONT COMPOUND RECOMMENDED | FRONT N° | FRONT DF | FRONT OE | FRONT UPGRADE 1 | FRONT UPGRADE 2 | REAR FD MF | REAR COMPOUND RECOMMENDED | REAR DF | REAR OE | REAR UPGRADE | KITS KG |
|---|---|---|---|---|---|---|---|---|---|---|---|---|---|---|---|---|
| MITO 125 SP 525 | 125 | 08 | | FD068 | G1050 | 1 | DF660 | CW | CRW | | FD012 | G1050 | | | | |
| NUVOLA | 125 | 00 | | FD171 | G1050 | 1 | | | | | MF | | - | | | |
| PASSING 125 | 125 | 95 | | FD188 | G1050 | 1 | DF018 | | | | MF | | - | | | |
| PLANET 125 | 125 | 98 | | FD068 | G1050 | 1 | DF660 | CW | CRW | | FD012 | G1050 | | | | |
| RAPTOR 125 | 125 | 03 | | FD068 | G1050 | 1 | DF660 | CW | CRW | | FD012 | G1050 | | | | |
| ROADSTER 125 | 125 | 93 | | FD074 | G1050 | 1 | | | | | MF | | - | | | |
| SUPER CITY 125 | 125 | 91 | | FD119 | G1054 | 1 | DF660 | CW | CRW | | FD012 | G1050 | | | | |
| **CCM** | | | | | | | | | | | | | | | | |
| C-XR 125 E | 125 | 08 | | FD073 | G1050 | 1 | | | | | FD095 | G1050 | | | | |
| RL 125 | 125 | 08 | | FD187 | G1050 | 1 | | | | | MF | | - | | | |
| TL 125 | 125 | 08 | | FD073 | G1050 | 1 | | | | | FD145 | G1050 | | | | |
| **CFMOTO** | | | | | | | | | | | | | | | | |
| E-CHARM | 125 | 10 | | FD187 | G1050 | 1 | | | | | FD079 | G1050 | | | | |
| GLORY | 125 | 10 | | FD187 | G1050 | 1 | | | | | FD200 | G1050 | | | | |
| **CH RACING** | | | | | | | | | | | | | | | | |
| WSM 50 MOTARD | 50 | 05 | | FD133 | G1050 | 1 | | | | | FD065 | G1050 | | | | |
| WXE 50 ENDURO | 50 | 05 | | FD133 | G1050 | 1 | | | | | FD065 | G1050 | | | | |
| WXE 125 ENDURO | 125 | 05 | | FD133 | G1050 | 1 | | | | | FD065 | G1050 | | | | |
| **CLIPIC** | | | | | | | | | | | | | | | | |
| CJ 50 E | 50 | 99 | | FD065 | G1050 | 1 | | | | | FD065 | G1050 | | | | |
| CJ 50 R | 50 | 99 | | FD065 | G1050 | 1 | | | | | FD065 | G1050 | | | | |
| CJ RACING | 50 | 99 | | FD065 | G1050 | 1 | | | | | FD065 | G1050 | | | | |
| CJ 80 R | 80 | 99 | | FD065 | G1050 | 1 | | | | | FD065 | G1050 | | | | |
| **CONTI** | | | | | | | | | | | | | | | | |
| PROMO CUP | 50 | 00 | 03 | FD048 | G1050 | 1 | DF674 | W | FLW | | FD153 | G1050 | DF646 | | | |
| PROMO CUP | 50 | 04 | | FD210 | G1054 | 1 | DF811 | W | | | FD153 | G1050 | DF810 | | | |
| RX 356 V3 | 80 | 05 | | FD341 | G1050 | 1 | | | | | FD065 | G1050 | | | | |
| **CPI** | | | | | | | | | | | | | | | | |
| ARAGON /GP 50 | 50 | 06 | | FD175 | G1050 | 1 | | | | | MF458 | G2165 | - | | | |
| FREAKY | 50 | 07 | | FD175 | G1050 | 1 | | | | | MF458 | G2165 | - | | | |
| GTR | 50 | 03 | | FD162 | G1054 | 1 | | | | | FD153 | G1050 | | | | |
| GTS | 50 | 03 | | FD162 | G1054 | 1 | | | | | FD153 | G1050 | | | | |
| HUSSAR | 50 | 01 | | FD094 | G1050 | 1 | DF037 | W | RW | FLS | MF458 | G2165 | - | | | |
| POPCORN | 50 | 01 | | FD175 | G1050 | 1 | DF037 | W | RW | FLS | MF458 | G2165 | - | | | |
| SM POWER | 50 | 06 | | FD065 | G1050 | 1 | | | | | FD065 | G1050 | | | | |
| SUPERCROSS 50 | 50 | 06 | | FD065 | G1050 | 1 | | | | | FD065 | G1050 | | | | |
| SUPERCROSS 50 ULTIMATE | 50 | 06 | | FD065 | G1050 | 1 | | | | | FD065 | G1050 | | | | |
| SX POWER | 50 | 06 | | FD065 | G1050 | 1 | | | | | FD065 | G1050 | | | | |
| ARAGON /GP 125 | 125 | 07 | | FD175 | G1050 | 1 | | | | | MF452 | G2165 | - | | | |
| GTR 125 | 125 | 03 | | FD162 | G1054 | 1 | | | | | FD153 | G1050 | | | | |
| GTS 125 | 125 | 03 | | FD162 | G1054 | 1 | | | | | FD153 | G1050 | | | | |
| X-LARGE 125 | 125 | 03 | | FD220 | G1050 | 1 | | | | | FD220 | G1050 | | | | |
| **CSR** | | | | | | | | | | | | | | | | |
| MAX | 125 | 09 | | FD145 | G1050 | 1 | | | | | FD145 | G1050 | | | | |
| ONA | 125 | 04 | | FD175 | G1050 | 1 | | | | | FD175 | G1050 | | | | |
| SCOO | 125 | 04 | | FD175 | G1050 | 1 | | | | | FD175 | G1050 | | | | |
| **DAELIM** | | | | | | | | | | | | | | | | |
| A-FOUR | 50 | 06 | | FD187 | G1050 | 1 | | | | | MF | | - | | | |
| BONITA 50 | 50 | 09 | | FD149 | G1050 | 1 | | | | | MF | | - | | | |
| CORDI | 50 | 04 | | FD149 | G1050 | 1 | | | | | MF | | - | | | |
| E-FIVE | 50 | 03 | | FD149 | G1050 | 1 | | | | | MF | | - | | | |
| MESSAGE 50 | 50 | 98 | | FD149 | G1050 | 1 | | | | | MF | | - | | | |
| S-FIVE 50 | 50 | 01 | | FD149 | G1050 | 1 | | | | | MF | | - | | | |
| DELFINO | 100 | 03 | | FD095 | G1050 | 1 | | | | | MF | | - | | | |
| CITI ACE 110 | 110 | 06 | | FD145 | G1050 | 1 | | | | | MF | | - | | | |
| AVANCE II | 125 | 98 | | FD095 | G1050 | 1 | | | | | MF | | - | | | |
| B-BONE | 125 | 08 | | FD222 | G1050 | 1 | | | | | FD095 | G1050 | | | | |
| BESBI | 125 | 08 | | FD144 | G1050 | 1 | | | | | MF | | - | | | |
| DAYSTAR 125 | 125 | 00 | | FD140 | G1050 | 1 | | | | | MF | | - | | | |
| DAYSTAR VL 125Z F1 PLUS | 125 | 14 | | FD140 | G1050 | 1 | DF031 | W | | | FD145 | G1050 | | | | |
| DELFINO 125 | 125 | 08 | | FD117 | G1050 | 1 | | | | | MF | | - | | | |
| HISTORY | 125 | 02 | | FD095 | G1050 | 1 | | | | | FD095 | G1050 | | | | |
| NS 125 | 125 | 98 | 99 | FD095 | G1050 | 1 | | | | | MF | | - | | | |
| NS 125 DXL | 125 | 02 | | FD095 | G1050 | 1 | | | | | FD095 | G1050 | | | | |
| NS 125 II | 125 | 00 | 00 | FD095 | G1050 | 1 | | | | | MF | | - | | | |
| NS 125 III | 125 | 01 | 01 | FD095 | G1050 | 1 | | | | | MF | | - | | | |
| OTELO f.i. | 125 | 08 | | FD222 | G1050 | 1 | | | | | FD095 | G1050 | | | | |
| ROADWIN | 125 | 03 | 10 | FD140 | G1050 | 1 | | | | | FD145 | G1050 | | | | |
| ROADWIN 125 R f.i | 125 | 11 | | FD140 | G1050 | 1 | | | | | FD145 | G1050 | | | | |
| S2 125 FREEWING | 125 | 06 | 07 | FD140 | G1050 | 1 | | | | | FD095 | G1050 | | | | |
| S2 125 FREEWING f.i. | 125 | 08 | | FD222 | G1050 | 1 | | | | | FD095 | G1050 | | | | |
| S3 125 Fi | 125 | 11 | | FD275 | G1050 | 1 | | | | | FD145 | G1050 | | | | |
| VL DAYSTAR 125 | 125 | 02 | | FD140 | G1050 | 1 | | | | | MF | | - | | | |

OE discs → W FLW CW Special discs → WLL WS RW RWS FLS FRS CRW

| BRAND & MODEL • MARCA Y MODELO<br>MARCA E MODELLO • MARQUE ET MODÉLE | C.C. | YEAR | | FRONT FD MF | FRONT COMPOUND RECOMMENDED | FRONT N° | FRONT DF | FRONT OE | FRONT UPGRADE 1 | FRONT UPGRADE 2 | REAR FD MF | REAR COMPOUND RECOMMENDED | REAR DF | REAR OE | REAR UPGRADE | KITS KG |
|---|---|---|---|---|---|---|---|---|---|---|---|---|---|---|---|---|
| VS 125 | 125 | 98 | | FD095 | G1050 | 1 | | | | | MF | | - | | | |
| VT/VS CUSTOM | 125 | 98 | | FD140 | G1050 | 1 | | | | | MF | | - | | | |
| **DERBI** | | | | | | | | | | | | | | | | |
| ATLANTIS | 50 | 99 | | FD065 | G1050 | 1 | | | | | MF301 | G2165 | - | | | |
| AVENTURA | 50 | 96 | | FD065 | G1050 | 1 | | | | | MF625 | G2165 | - | | | |
| BLACK DEVIL | 50 | 04 | | FD162 | G1054 | 1 | DF674 | W | FLW | | FD065 | G1050 | DF698 | W | | |
| DRD 50 PRO R | 50 | 06 | | FD220 | G1050 | 1 | | | | | FD065 | G1050 | | | | |
| DRD 50 R RACING | 50 | 06 | | FD162 | G1054 | 1 | | | | | FD065 | G1050 | | | | |
| DRD 50 R RACING PRO | 50 | 06 | | FD220 | G1050 | 1 | | | | | FD065 | G1050 | | | | |
| DRD 50 SM EDITION / RACING | 50 | 06 | | FD220 | G1050 | 1 | | | | | FD065 | G1050 | | | | |
| FENIX | 50 | 93 | | FD065 | G1050 | 1 | | | | | MF625 | G2165 | - | | | |
| FURAX 50 | 50 | 96 | | FD065 | G1050 | 1 | | | | | MF625 | G2165 | - | | | |
| GP 1 | 50 | 01 | 04 | FD065 | G1050 | 1 | | | | | FD065 | G1050 | DF705 | W | | |
| GP 1 | 50 | 05 | | FD220 | G1050 | 1 | | | | | FD065 | G1050 | DF705 | W | | |
| GP 1 OPEN | 50 | 06 | | FD162 | G1054 | 1 | | | | | FD065 | G1050 | | | | |
| GPR 50 NUDE | 50 | 04 | | FD220 | G1050 | 1 | | | | | FD065 | G1050 | | | | |
| GPR 50 R | 50 | 97 | 03 | FD133 | G1050 | 1 | | | | | FD065 | G1050 | | | | |
| GPR 50 R | 50 | 04 | 09 | FD220 | G1050 | 1 | | | | | FD065 | G1050 | | | | |
| GPR 50 R | 50 | 10 | | FD341 | G1050 | 1 | | | | | FD252 | G1050 | | | | |
| GPR 50 SPORT | 50 | 93 | 96 | FD084 | G1050 | 1 | | | | | FD048 | G1050 | | | | |
| GPX 1 | 50 | 06 | | FD220 | G1050 | 1 | | | | | FD065 | G1050 | | | | |
| HUNTER 50 | 50 | 96 | | FD065 | G1050 | 1 | | | | | MF301 | G2165 | - | | | |
| PADDOCK 50 | 50 | 96 | | FD065 | G1050 | 1 | | | | | MF301 | G2165 | - | | | |
| PREDATOR | 50 | 98 | 98 | FD065 | G1050 | 1 | | | | | FD065 | G1050 | | | | |
| PREDATOR 0.2 | 50 | 99 | | FD065 | G1050 | 1 | | | | | MF301 | G2165 | - | | | |
| PROGRESS 50 | 50 | 97 | | FD065 | G1050 | 1 | | | | | MF301 | G2165 | - | | | |
| RAMBLA 50 | 50 | 06 | | FD270 | G1050 | 1 | | | | | FD270 | G1050 | | | | |
| RECORD 50 | 50 | 98 | | FD065 | G1050 | 1 | | | | | MF301 | G2165 | - | | | |
| SABANA 50 | 50 | 90 | | FD065 | G1050 | 1 | | | | | FD065 | G1050 | | | | |
| SENDA | 50 | 93 | 95 | FD065 | G1050 | 1 | | | | | MF625 | G2165 | - | | | |
| SENDA | 50 | 97 | | FD065 | G1050 | 1 | | | | | FD065 | G1050 | DF700 | W | | |
| SENDA PRO | 50 | 08 | | FD220 | G1050 | 1 | | | | | FD270 | G1050 | | | | |
| SENDA R DRD | 50 | 02 | 04 | FD162 | G1054 | 1 | DF674 | W | FLW | | FD065 | G1050 | DF700 | W | | |
| SENDA SM DRD | 50 | 02 | 04 | FD065 | G1050 | 2 | DF708 | W | | | FD065 | G1050 | DF698 | W | | |
| SENDA SM DRD 50 EVO | 50 | 09 | | FD220 | G1050 | 1 | DF759 | W | | | FD065 | G1050 | DF698 | W | | |
| SENDA SM DRD LIMITED | 50 | 05 | | FD065 | G1050 | 2 | DF708 | W | | | FD065 | G1050 | DF709 | W | | |
| SENDA X-TREM R | 50 | 03 | | FD065 | G1050 | 1 | | | | | FD065 | G1050 | DF700 | W | | |
| SONAR | 50 | 10 | | FD200 | G1050 | 1 | | | | | MF | | - | | | |
| SUPERMOTARD | 50 | 98 | | FD065 | G1050 | 1 | | | | | FD065 | G1050 | | | | |
| URBAN, BOX | 50 | 94 | | MF625 | G2165 | | - | | | | MF625 | G2165 | - | | | |
| VAMOS | 50 | 94 | 94 | FD065 | G1050 | 1 | | | | | MF625 | G2165 | - | | | |
| VAMOS R | 50 | 95 | 95 | FD170 | G1050 | 1 | | | | | MF625 | G2165 | - | | | |
| VAMOS R | 50 | 96 | | FD065 | G1050 | 1 | | | | | MF625 | G2165 | - | | | |
| VARIANT SPORT R | 50 | 94 | | FD065 | G1050 | 1 | | | | | MF625 | G2165 | - | | | |
| WAVE | 50 | 00 | | FD065 | G1050 | 1 | | | | | MF301 | G2165 | - | | | |
| X RACE 50 | 50 | 06 | | FD065 | G1050 | 1 | | | | | FD065 | G1050 | DF700 | W | | |
| GPR 75 SPORT | 75 | 90 | | FD084 | G1050 | 1 | | | | | FD048 | G1050 | | | | |
| GPR 80 R CUP | 80 | 04 | | FD341 | G1050 | 1 | | | | | FD065 | G1050 | | | | |
| ATLANTIS 100 | 100 | 01 | | FD065 | G1050 | 1 | | | | | MF301 | G2165 | - | | | |
| ATLANTIS 100 4T | 100 | 01 | | FD065 | G1050 | 1 | | | | | MF301 | G2165 | - | | | |
| BOULERVARD | 125 | 03 | 06 | FD270 | G1050 | 1 | DF737 | W | | | MF | | - | | | |
| BOULERVARD S | 125 | 07 | | FD074 | G1050 | 1 | DF671 | W | FLW | | FD228 | G1050 | DF612 | W | | |
| CROSS CITY | 125 | 09 | | FD409 | G1054 | 1 | DF888 | W | | | FD270 | G1050 | DF698 | W | | |
| GP 1 125 | 125 | 06 | | FD220 | G1050 | 1 | | | | | FD220 | G1050 | | | | |
| GPR 125 4T 4V | 125 | 09 | | FD341 | G1050 | 1 | | | | | FD252 | G1050 | | | | |
| GPR 125 NUDE | 125 | 04 | | FD341 | G1050 | 1 | | | | | FD065 | G1050 | | | | |
| GPR 125 R | 125 | 04 | 08 | FD341 | G1050 | 1 | | | | | FD065 | G1050 | | | | |
| GPR 125 R | 125 | 09 | | FD341 | G1050 | 1 | | | | | FD252 | G1050 | | | | |
| MULHACEN 125 | 125 | 06 | | FD409 | G1054 | 1 | DF888 | W | | | FD252 | G1050 | DF698 | W | | |
| MULHACEN CAFÉ 125 | 125 | 08 | | FD341 | G1050 | 1 | | | | | FD252 | G1050 | | | | |
| RAMBLA 125 | 125 | 07 | | FD074 | G1050 | 1 | DF671 | W | FLW | | FD228 | G1050 | DF612 | W | | |
| SENDA DRD 125 R 4T 4V | 125 | 09 | | FD220 | G1050 | 1 | DF674 | W | FLW | | FD252 | G1050 | DF675 | W | | |
| SENDA DRD 125 R RACING | 125 | 06 | | FD162 | G1054 | 1 | | | | | FD065 | G1050 | | | | |
| SENDA R 4T | 125 | 04 | | FD162 | G1054 | 1 | DF674 | W | FLW | | FD065 | G1050 | DF675 | W | | |
| SENDA SM 4T | 125 | 04 | | FD162 | G1054 | 1 | | | | | FD065 | G1050 | DF675 | W | | |
| SONAR | 125 | 10 | | FD200 | G1050 | 1 | | | | | MF | | - | | | |
| TERRA 4T 125 | 125 | 06 | | FD409 | G1054 | 1 | DF888 | W | | | FD252 | G1050 | DF698 | W | | |
| TERRA 4T 125 ADVENTURE | 125 | 08 | | FD409 | G1054 | 1 | | | | | FD252 | G1050 | DF698 | W | | |
| **DORTON** | | | | | | | | | | | | | | | | |
| MAXI URBAN 125 | 125 | 06 | | FD095 | G1050 | 1 | | | | | MF | | - | | | |
| **FACTORY** | | | | | | | | | | | | | | | | |
| CHRONO SM 50 | 50 | 99 | 01 | FD075 | G1050 | 1 | | | | | FD075 | G1050 | | | | |
| CHRONO SM 50 | 50 | 02 | | FD162 | G1054 | 1 | | | | | FD065 | G1050 | | | | |



**OE:** Original equipment (original replacement disc) • **OE:** Equipo original (disco de remplazo del original) For other models years previous to 1990 visit **www.galferonline.es** • Para otros modelos anteriores al año 1990 visitar **www.galferonline.es**
For consult TÜV (ABE) type approvals visit **www.galfermoto.com --> DOWNALOAD --> TÜV CERTIFICATIONS** • Para consultar las homologaciones TÜV (ABE) visitar **www.galfermoto.com --> DESCARGAS --> CERTIFICACIONES TÜV**

| BRAND & MODEL • MARCA Y MODELO<br>MARCA E MODELLO • MARQUE ET MODÉLE | C.C. | YEAR | | FRONT FD MF | FRONT COMPOUND RECOMMENDED | FRONT N° | FRONT DF | FRONT OE | FRONT UPGRADE 1 | FRONT UPGRADE 2 | REAR FD MF | REAR COMPOUND RECOMMENDED | REAR DF | REAR OE | REAR UPGRADE | KITS KG |
|---|---|---|---|---|---|---|---|---|---|---|---|---|---|---|---|---|
| PHANTHOM R 12 | 50 | 03 | | FD224 | G1050 | 1 | | | | | FD065 | G1050 | | | | |
| PHANTHOM R 14 | 50 | 03 | | FD224 | G1050 | 1 | | | | | FD065 | G1050 | | | | |
| YR 50 | 50 | 98 | 00 | FD075 | G1050 | 1 | | | | | FD075 | G1050 | | | | |
| YR 50 DESERT | 50 | 01 | | FD162 | G1054 | 1 | | | | | FD065 | G1050 | | | | |
| **FANTIC** | | | | | | | | | | | | | | | | |
| 50 K-ROO | 50 | 92 | | FD065 | G1050 | 1 | DF644 | | | | FD065 | G1050 | | | | |
| 50 TRIAL | 50 | 92 | | FD065 | G1050 | 1 | | | | | FD065 | G1050 | | | | |
| CABALLERO 50 RC | 50 | 94 | | FD162 | G1054 | 1 | | | | | FD048 | G1050 | | | | |
| CABALLERO 50 RS, RC | 50 | 92 | 93 | FD012 | G1050 | 1 | | | | | FD048 | G1050 | | | | |
| CABALLERO 80 RC | 50 | 94 | | FD074 | G1050 | 1 | | | | | FD048 | G1050 | | | | |
| CICLONE | 50 | 94 | | FD071 | G1054 | 1 | | | | | MF | | - | | | |
| CLUBMAN 50 | 50 | 95 | | FD065 | G1050 | 1 | | | | | FD065 | G1050 | | | | |
| GRINTA | 50 | 97 | | FD136 | G1050 | 1 | DF466 | W | | | FD135 | G1050 | | | | |
| KET ROO | 50 | 93 | | FD065 | G1050 | 1 | | | | | FD065 | G1050 | | | | |
| LEADER 50 | 50 | 95 | | FD136 | G1050 | 1 | | | | | FD135 | G1050 | | | | |
| REGOLARITA CASA | 50 | 07 | | FD162 | G1054 | 1 | | | | | FD075 | G1050 | | | | |
| REGOLARITA COMPETICION | 50 | 07 | | FD164 | G1054 | 1 | | | | | FD093 | G1054 | | | | |
| SUPERSEI MOTARD | 50 | 07 | | FD162 | G1054 | 1 | | | | | FD075 | G1050 | | | | |
| REGOLARITA CASA | 125 | 07 | | FD162 | G1054 | 1 | | | | | FD075 | G1050 | | | | |
| REGOLARITA COMPETICION | 125 | 07 | | FD164 | G1054 | 1 | | | | | FD093 | G1054 | | | | |
| X RIDER 125 | 125 | 07 | | FD164 | G1054 | 1 | | | | | FD093 | G1054 | | | | |
| **GARELLI** | | | | | | | | | | | | | | | | |
| 50 BIG RACING | 50 | 94 | | FD136 | G1050 | 1 | | | | | MF | | - | | | |
| 50 BIG WHEELS | 50 | 94 | | FD136 | G1050 | 1 | DF466 | W | | | FD071 | G1054 | DF466 | W | | |
| 50 KOALA | 50 | 94 | | FD048 | G1050 | 1 | | | | | FD048 | G1050 | | | | |
| 50 PONY, SR | 50 | 94 | | FD136 | G1050 | 1 | DF466 | W | | | FD071 | G1054 | | | | |
| 50 QUEENIE | 50 | 95 | | FD094 | G1050 | 1 | | | | | MF | | - | | | |
| 50 SUPER CICLONE AC | 50 | 91 | | FD071 | G1054 | 1 | | | | | MF722 | G2165 | - | | | |
| **GAS GAS** | | | | | | | | | | | | | | | | |
| EC ENDUCROSS BOY | 50 | 99 | 05 | FD225 | G1050 | 1 | | | | | FD225 | G1050 | | | | |
| EC ENDUCROSS BOY | 50 | 06 | | FD225 | G1050 | 1 | | | | | FD224 | G1050 | | | | |
| EC ROOKIE | 50 | 01 | | FD133 | G1050 | 1 | | | | | FD225 | G1050 | | | | |
| MC 50 | 50 | 06 | | FD225 | G1050 | 1 | | | | | FD224 | G1050 | | | | |
| SM 50 | 50 | 05 | | FD162 | G1054 | 1 | | | | | FD225 | G1050 | | | | |
| SM ROOKIE | 50 | 01 | 04 | FD133 | G1050 | 1 | | | | | FD225 | G1050 | | | | |
| TXT BOY | 50 | 99 | 02 | FD225 | G1050 | 1 | | | | | FD225 | G1050 | | | | |
| TXT ROOKIE | 50 | 03 | | FD225 | G1050 | 1 | | | | | FD225 | G1050 | | | | |
| 125 PAMPERA | 125 | 96 | 98 | FD065 | G1050 | 1 | | | | | FD065 | G1050 | | | | |
| 125 PAMPERA | 125 | 03 | | FD162 | G1054 | 1 | DF674 | W | FLW | | FD225 | G1050 | | | | |
| 125 PAMPERA 4T | 125 | 99 | 02 | FD065 | G1050 | 1 | | | | | FD065 | G1050 | | | | |
| HALLEY 125 | 125 | 09 | | FD164 | G1054 | 1 | DF677 | W | FLW | FLS | FD093 | G1054 | DF678 | WLL | WS | KG677 |
| **GENERIC** | | | | | | | | | | | | | | | | |
| EPICO | 50 | 10 | | FD175 | G1050 | 1 | | | | | MF458 | G2165 | - | | | |
| IDEO | 50 | 05 | | FD175 | G1050 | 1 | DF649 | W | | | MF458 | G2165 | - | | | |
| ONIX | 50 | 10 | | FD153 | G1050 | 1 | | | | | MF458 | G2165 | - | | | |
| ROC | 50 | 08 | | FD175 | G1050 | 1 | DF649 | W | | | MF458 | G2165 | - | | | |
| TOXIC 50 | 50 | 07 | | FD162 | G1054 | 1 | | | | | FD048 | G1050 | | | | |
| TRIGGER SM 50 | 50 | 06 | | FD162 | G1054 | 1 | | | | | FD048 | G1050 | | | | |
| TRIGGER X 50 | 50 | 06 | | FD162 | G1054 | 1 | | | | | FD048 | G1050 | | | | |
| XOR | 50 | 05 | | FD175 | G1050 | 1 | DF649 | W | | | MF458 | G2165 | - | | | |
| XOR 2 | 50 | 10 | | FD175 | G1050 | 1 | DF649 | W | | | MF458 | G2165 | - | | | |
| IDEO 125 | 125 | 05 | | FD175 | G1050 | 1 | DF649 | W | | | MF458 | G2165 | - | | | |
| SOHO 125 | 125 | 06 | | FD175 | G1050 | 1 | | | | | MF | | - | | | |
| XOR 125 | 125 | 05 | | FD175 | G1050 | 1 | DF649 | W | | | MF458 | G2165 | - | | | |
| ZION 125 | 125 | 08 | | FD187 | G1050 | 1 | | | | | MF | | - | | | |
| **GILERA-PIAGGIO** | | | | | | | | | | | | | | | | |
| 50 R | 50 | 93 | | FD153 | G1050 | 1 | DF629 | W | RW | FLS | MF | | - | | | |
| 50 RT FUN | 50 | 93 | | FD153 | G1050 | 1 | DF629 | W | RW | FLS | MF | | - | | | |
| 50 TYPHOON | 50 | 93 | | FD153 | G1050 | 1 | DF629 | W | RW | FLS | MF621 | G2165 | - | | | |
| 50 VX 10 | 50 | 92 | | FD075 | G1050 | 1 | | | | | FD075 | G1050 | | | | |
| DNA 50 (G) | 50 | 00 | | FD162 | G1054 | 1 | DF666 | W | | | FD200 | G1050 | | | | |
| DNA 50 (H) | 50 | 00 | | FD277 | G1050 | 1 | DF666 | W | | | FD200 | G1050 | | | | |
| EAGLET, 6V | 50 | 96 | | FD152 | G1050 | 1 | | | | | FD135 | G1050 | | | | |
| GP 50 | 50 | 02 | | FD133 | G1050 | 1 | | | | | FD065 | G1050 | | | | |
| GPR 50 POGGIALI REPLICA | 50 | 03 | | FD133 | G1050 | 1 | | | | | FD065 | G1050 | | | | |
| GSM 50 | 50 | 00 | | FD065 | G1050 | 1 | | | | | FD065 | G1050 | | | | |
| H@K 50 | 50 | 01 | | FD065 | G1050 | 1 | | | | | FD065 | G1050 | | | | |
| ICE 50 | 50 | 01 | | FD153 | G1050 | 1 | | | | | MF | | - | | | |
| NRG MC2 | 50 | 98 | 00 | FD153 | G1050 | 1 | DF629 | W | RW | FLS | FD200 | G1050 | DF705 | W | | |
| NRG MC3 | 50 | 01 | | FD153 | G1050 | 1 | DF629 | W | RW | FLS | FD200 | G1050 | DF705 | W | | |
| OFF ROAD R SIX SPEED 50 | 50 | 97 | | FD065 | G1050 | 1 | | | | | FD065 | G1050 | | | | |
| RCR 50 | 50 | 04 | | FD065 | G1050 | 1 | | | | | FD065 | G1050 | | | | |
| RUNNER 50 | 50 | 97 | 97 | FD153 | G1050 | 1 | DF737 | W | | | MF636 | G2165 | - | | | |

| BRAND & MODEL • MARCA Y MODELO<br>MARCA E MODELLO • MARQUE ET MODÉLE | C.C. | YEAR | | FRONT FD MF | FRONT COMPOUND RECOMMENDED | FRONT N° | FRONT DF | FRONT OE | FRONT UPGRADE 1 | FRONT UPGRADE 2 | REAR FD MF | REAR COMPOUND RECOMMENDED | REAR DF | REAR OE | REAR UPGRADE | KITS KG |
|---|---|---|---|---|---|---|---|---|---|---|---|---|---|---|---|---|
| RUNNER 50 DD | 50 | 98 | | FD153 | G1050 | 1 | DF737 | W | | | FD200 | G1050 | DF705 | W | | |
| RUNNER 50 SP | 50 | 98 | 04 | FD153 | G1050 | 1 | DF737 | W | | | FD200 | G1050 | DF705 | W | | |
| RUNNER 50 SP | 50 | 05 | 05 | FD135 | G1050 | 1 | DF737 | W | | | FD200 | G1050 | DF705 | W | | |
| RUNNER 50 SP / PJ | 50 | 06 | | FD277 | G1050 | 1 | DF737 | W | | | FD200 | G1050 | DF705 | W | | |
| STALKER 50 | 50 | 97 | | FD153 | G1050 | 1 | DF629 | W | RW | FLS | FD200 | G1050 | DF705 | W | | |
| SURFER 50 | 50 | 00 | | FD065 | G1050 | 1 | | | | | MF | | - | | | |
| ZULU 50 | 50 | 01 | | FD065 | G1050 | 1 | | | | | FD065 | G1050 | | | | |
| 125 APACHE | 125 | 92 | | FD089 | G1054 | 1 | | | | | FD079 | G1050 | | | | |
| 125 CRONO AE | 125 | 91 | | FD118 | G1050 | 1 | | | | | FD012 | G1050 | | | | |
| 125 CX, AE | 125 | 91 | | FD118 | G1050 | 1 | | | | | FD012 | G1050 | | | | |
| 125 FREESTYLE | 125 | 92 | | FD118 | G1050 | 1 | | | | | FD012 | G1050 | | | | |
| 125 GFR | 125 | 93 | 94 | FD118 | G1050 | 1 | DF660 | CW | CRW | | FD012 | G1050 | | | | |
| 125 RC | 125 | 90 | | FD089 | G1054 | 1 | | | | | FD012 | G1050 | | | | |
| 125 SATURNO PIUMA | 125 | 90 | | FD068 | G1050 | 1 | | | | | FD065 | G1050 | | | | |
| 125 SP02 | 125 | 90 | | FD118 | G1050 | 1 | | | | | FD012 | G1050 | | | | |
| 125 TYPHOON | 125 | 95 | | FD153 | G1050 | 1 | DF629 | W | RW | FLS | MF621 | G2165 | - | | | |
| COUGAR 125 | 125 | 01 | | FD074 | G1050 | 1 | | | | | MF | | - | | | |
| DNA 125 (G) | 125 | 01 | | FD162 | G1054 | 1 | DF666 | W | | | FD263 | G1054 | DF666 | W | | |
| DNA 125 (H) | 125 | 01 | | FD277 | G1050 | 1 | DF666 | W | | | FD263 | G1054 | DF666 | W | | |
| NEXUS | 125 | 07 | | FD277 | G1050 | 1 | DF667 | W | | | FD277 | G1050 | DF666 | W | | |
| NEXUS i.e. | 125 | 09 | | FD277 | G1050 | 1 | DF667 | W | | | FD277 | G1050 | DF666 | W | | |
| RUNNER 125 FX (G) | 125 | 97 | 98 | FD162 | G1054 | 1 | DF737 | W | | | MF | | - | | | |
| RUNNER 125 FX (H) | 125 | 97 | 98 | FD277 | G1050 | 1 | DF737 | W | | | MF | | - | | | |
| RUNNER 125 SP | 125 | 99 | 00 | FD162 | G1054 | 1 | DF737 | W | | | FD200 | G1050 | DF666 | W | | |
| RUNNER 125 VX (G) | 125 | 01 | | FD162 | G1054 | 1 | DF737 | W | | | FD263 | G1054 | DF666 | W | | |
| RUNNER 125 VX (H) | 125 | 01 | | FD277 | G1050 | 1 | DF737 | W | | | FD263 | G1054 | DF666 | W | | |
| SC 125 | 125 | 06 | | FD341 | G1050 | 1 | | | | | FD065 | G1050 | | | | |
| **GOVECS** | | | | | | | | | | | | | | | | |
| GO ! S1.2 | EL | 10 | | FD065 | G1050 | 1 | DF649 | W | | | MF | | - | | | |
| **GRIMECA** | | | | | | | | | | | | | | | | |
| RADIAL SCOOTER | | 04 | | FD338 | | | | | | | | | | | | |
| **HM** | | | | | | | | | | | | | | | | |
| CRE BAJA | 50 | 99 | 02 | FD075 | G1050 | 1 | DF674 | W | FLW | | FD075 | G1050 | DF889 | W | | |
| CRE BAJA | 50 | 03 | 08 | FD162 | G1054 | 1 | DF674 | W | FLW | | FD065 | G1050 | DF889 | W | | |
| CRE BAJA | 50 | 09 | | FD162 | G1054 | 1 | | | | | FD278 | G1054 | DF889 | W | | |
| CRE BAJA RR | 50 | 09 | | FD411 | G1054 | 1 | DF674 | W | FLW | | FD278 | G1054 | DF889 | W | | |
| CRE SIX | 50 | 99 | 02 | FD162 | G1054 | 1 | DF674 | W | FLW | | FD075 | G1050 | DF889 | W | | |
| CRE SIX | 50 | 03 | | FD162 | G1054 | 1 | DF674 | W | FLW | | FD065 | G1050 | DF889 | W | | |
| CRE SIX COMPETICION | 50 | 09 | | FD411 | G1054 | 1 | DF674 | W | FLW | | FD278 | G1054 | DF889 | W | | |
| DERAPAGE | 50 | 99 | 02 | FD075 | G1050 | 1 | DF699 | W | FLW | | FD075 | G1050 | DF889 | W | | |
| DERAPAGE | 50 | 03 | 08 | FD162 | G1054 | 1 | DF699 | W | FLW | | FD065 | G1050 | DF889 | W | | |
| DERAPAGE | 50 | 09 | | FD162 | G1054 | 1 | DF699 | W | FLW | | FD278 | G1054 | DF889 | W | | |
| DERAPAGE COMPETICION | 50 | 09 | 10 | FD411 | G1054 | 1 | DF699 | W | FLW | | FD278 | G1054 | DF889 | W | | |
| DERAPAGE COMPETICION | 50 | 11 | | FD304 | G1054 | 1 | DF699 | W | FLW | | FD286 | G1054 | DF889 | W | | |
| CRE F 125 X | 125 | 08 | | FD162 | G1054 | 1 | | | | | FD278 | G1054 | DF010 | W | | |
| DERAPAGE 4T COMPETICION | 125 | 11 | | FD304 | G1054 | 1 | DF751 | W | FLW | | FD286 | G1054 | | | | |
| **HONDA** | | | | | | | | | | | | | | | | |
| BALI 50 SJ | 50 | 95 | | FD195 | G1050 | 1 | DF037 | W | RW | FLS | MF002 | G2165 | - | | | |
| CB 50 | 50 | 95 | | FD266 | G1050 | 1 | | | | | MF003 | G2165 | - | | | |
| DAX 50 ST | 50 | 93 | | MF002 | G2165 | | - | | | | MF002 | G2165 | - | | | |
| DIO 50 | 50 | 91 | 93 | FD149 | G1050 | 1 | DF018 | | | | MF001 | G2165 | - | | | |
| DIO ZX 50 | 50 | 94 | | FD149 | G1050 | 1 | DF018 | | | | MF001 | G2165 | - | | | |
| DREAM 50 | 50 | 01 | | FD145 | G1050 | 1 | | | | | FD144 | G1050 | | | | |
| GP 50 DIO | 50 | 92 | | FD149 | G1050 | 1 | DF018 | | | | MF001 | G2165 | - | | | |
| HSC 01-ZR | 50 | 94 | | FD149 | G1050 | 1 | DF018 | | | | MF001 | G2165 | - | | | |
| MG 50 MAGNA | 50 | 02 | | FD095 | G1050 | 1 | | | | | MF003 | G2165 | - | | | |
| NH LEAD 50 | 50 | 93 | | MF002 | G2165 | | - | | | | MF609 | G2165 | - | | | |
| NPS 50 ZOOMER | 50 | 01 | | MF001 | G2165 | | - | | | | MF001 | G2165 | - | | | |
| NS1 50 REPLICA | 50 | 96 | | FD145 | G1050 | 1 | DF083 | W | | | FD144 | G1050 | | | | |
| NSC 50 AC | 50 | 13 | | FD439 | G1050 | 1 | DF078 | W | | | MF051 | G2165 | - | | | KG078 |
| NSC 50 C | 50 | 13 | | FD439 | G1050 | 1 | DF078 | W | | | MF051 | G2165 | - | | | KG078 |
| NSC 50 R | 50 | 13 | | FD439 | G1050 | 1 | DF078 | W | | | MF051 | G2165 | - | | | KG078 |
| NSR 50 | 50 | 94 | 95 | FD073 | G1050 | 1 | | | | | FD093 | G1054 | | | | |
| PX WALLAROO | 50 | 90 | | MF001 | G2165 | | - | | | | MF002 | G2165 | - | | | |
| SFX 50 | 50 | 95 | | FD153 | G1050 | 1 | DF038 | | | | MF002 | G2165 | - | | | |
| SGX 50 SKY | 50 | 97 | | FD153 | G1050 | 1 | DF037 | W | RW | FLS | MF008 | G2165 | - | | | |
| SH 50 SCOOPY | 50 | 96 | | FD153 | G1050 | 1 | DF015 | W | | | MF002 | G2165 | - | | | |
| SRX 50 SHADOW | 50 | 97 | | FD144 | G1050 | 1 | | | | | MF002 | G2165 | - | | | |
| VISION 50 | 50 | 12 | | FD439 | G1050 | 1 | DF078 | W | | | MF051 | G2165 | - | | | KG078 |
| X8R-S | 50 | 98 | | FD153 | G1050 | 1 | | | | | FD166 | G1050 | DF055 | W | | |
| XR 50 MOTARD | 50 | 05 | | FD145 | G1050 | 1 | | | | | FD144 | G1050 | | | | |
| CRM 75 R | 75 | 90 | 92 | FD095 | G1050 | 1 | | | | | MF002 | G2165 | - | | | |
| CRM 75, R | 75 | 93 | | FD074 | G1050 | 1 | | | | | MF002 | G2165 | - | | | |



**OE:** Original equipment (original replacement disc) • **OE:** Equipo original (disco de remplazo del original) For other models years previous to 1990 visit **www.galferonline.es** • Para otros modelos anteriores al año 1990 visitar **www.galferonline.es**
For consult TÜV (ABE) type approvals visit **www.galfermoto.com --> DOWNALOAD --> TÜV CERTIFICATIONS** • Para consultar las homologaciones TÜV (ABE) visitar **www.galfermoto.com --> DESCARGAS --> CERTIFICACIONES TÜV**

| BRAND & MODEL • MARCA Y MODELO<br>MARCA E MODELLO • MARQUE ET MODÉLE | C.C. | YEAR | | FRONT FD MF | FRONT COMPOUND RECOMMENDED | FRONT N° | FRONT DF | FRONT OE | FRONT UPGRADE 1 | FRONT UPGRADE 2 | REAR FD MF | REAR COMPOUND RECOMMENDED | REAR DF | REAR OE | REAR UPGRADE | KITS KG |
|---|---|---|---|---|---|---|---|---|---|---|---|---|---|---|---|---|
| DAX ST 70 | 75 | 90 | | MF002 | G2165 | | - | | | | MF002 | G2165 | - | | | |
| NS1, REPLICA | 75 | 92 | | FD145 | G1050 | 1 | DF083 | W | | | FD144 | G1050 | | | | |
| CUB EZ 90 | 90 | 90 | | MF002 | G2165 | | - | | | | MF002 | G2165 | - | | | |
| NH 90 YUPI | 90 | 91 | | FD144 | G1050 | 1 | DF037 | W | RW | FLS | MF002 | G2165 | - | | | |
| SRX 90 SHADOW | 90 | 97 | | FD144 | G1050 | 1 | DF037 | W | RW | FLS | MF002 | G2165 | - | | | |
| BALI SJ 100 EX | 100 | 95 | | FD195 | G1050 | 1 | DF037 | W | RW | FLS | MF002 | G2165 | - | | | |
| NSF 100 | 100 | 07 | | FD145 | G1050 | 1 | | | | | FD093 | G1054 | | | | |
| SCV 100 LEAD | 100 | 03 | 07 | MF051 | G2165 | | - | | | | MF051 | G2165 | - | | | |
| SH 100 SCOOPY | 100 | 96 | | FD153 | G1050 | 1 | DF015 | W | | | MF002 | G2165 | - | | | |
| XR 100 MOTARD | 100 | 05 | | FD145 | G1050 | 1 | | | | | FD144 | G1050 | | | | |
| SCV 110 LEAD | 110 | 08 | | FD063 | G1050 | 1 | | | | | MF051 | G2165 | - | | | |
| VISION 110 AC | 110 | 11 | | FD439 | G1050 | 1 | DF078 | W | | | MF051 | G2165 | - | | | KG078 |
| VISION 110 WHB | 110 | 11 | | FD439 | G1050 | 1 | DF078 | W | | | MF051 | G2165 | - | | | KG078 |
| @ 125 | 125 | 00 | | FD284 | G1050 | 1 | DF071 | W | WS | | MF051 | G2165 | - | | | KG071 |
| ANF 125 INNOVA | 125 | 03 | 06 | FD298 | G1050 | 1 | | | | | MF | | - | | | |
| ANF 125 INNOVA | 125 | 07 | | FD298 | G1050 | 1 | | | | | MF | | - | | | |
| CA 125 REBEL | 125 | 95 | 98 | FD187 | G1050 | 1 | | | | | MF005 | G2165 | - | | | |
| CA 125 REBEL | 125 | 99 | | FD195 | G1050 | 1 | | | | | MF005 | G2165 | - | | | |
| CBF 125 | 125 | 09 | | FD298 | G1050 | 1 | | | | | MF051 | G2165 | - | | | |
| CBR 125 R | 125 | 04 | 10 | FD298 | G1050 | 1 | DF031 | W | | | FD259 | G1050 | DF048 | W | | |
| CBR 125 R | 125 | 11 | | FD298 | G1050 | 1 | DF031 | W | | | | | DF048 | W | | |
| CG 125 | 125 | 04 | | FD095 | G1050 | 1 | | | | | MF | | - | | | |
| CHA 125 SPACY | 125 | 98 | | FD073 | G1050 | 1 | DF037 | W | RW | FLS | MF | | - | | | |
| CITYFLY 125 | 125 | 99 | | FD195 | G1050 | 1 | | | | | MF | | - | | | |
| CRM 125, R | 125 | 90 | | FD074 | G1050 | 1 | | | | | FD012 | G1050 | | | | |
| DYLAN 125 | 125 | 02 | | FD284 | G1050 | 1 | DF071 | W | WS | | MF051 | G2165 | - | | | KG071 |
| FORZA 125 | 125 | 15 | | FD266 | G1050 | 1 | DF083 | W | | | FD345 | G1050 | DF007 | W | | |
| MSX 125 | 125 | 13 | | FD298 | G1050 | 1 | DF078 | W | | | FD103 | G1054 | DF911 | W | | |
| MTX 125 R2HI | 125 | 91 | | FD074 | G1050 | 1 | | | | | MF002 | G2165 | - | | | |
| NSR 125 F ( I ) | 125 | 90 | | FD074 | G1050 | 1 | | | | | FD190 | G1054 | | | | |
| NSR 125 R ( I ) | 125 | 90 | | FD074 | G1050 | 1 | | | | | FD190 | G1054 | | | | |
| NX 125 ( I ) | 125 | 90 | 92 | FD074 | G1050 | 1 | | | | | MF003 | G2165 | - | | | |
| NX 125 ( I ) TRANSCITY | 125 | 93 | | FD074 | G1050 | 1 | | | | | MF003 | G2165 | - | | | |
| PANTHEON 125 | 125 | 98 | 02 | FD207 | G1050 | 1 | DF007 | W | | | MF044 | G2165 | - | | | |
| PANTHEON 125 | 125 | 03 | | FD207 | G1050 | 1 | DF007 | W | | | FD103 | G1054 | DF013 | W | | |
| PCX 125 | 125 | 10 | | FD439 | G1050 | 1 | DF078 | W | | | MF051 | G2165 | - | | | KG078 |
| PS 125i | 125 | 06 | | FD284 | G1050 | 1 | DF071 | W | WS | | MF051 | G2165 | - | | | KG071 |
| RS 125 R | 125 | 90 | 92 | FD266 | G1050 | 1 | DF012 | CW | | | FD113 | G1050 | DF019 | W | | |
| RS 125 R | 125 | 93 | | FD068 | G1050 | 1 | DF012 | CW | | | FD113 | G1050 | DF019 | W | | |
| S WING 125 / ABS | 125 | 07 | | FD344 | G1050 | 1 | DF006 | W | | | FD345 | G1050 | | | | |
| SH 125 i SCOOPY | 125 | 05 | 08 | FD284 | G1050 | 1 | DF071 | W | WS | | MF051 | G2165 | - | | | KG071 |
| SH 125 i SCOOPY (D-D) | 125 | 09 | 12 | FD344 | G1050 | 1 | DF007 | W | WS | | FD345 | G1050 | DF007 | W | | KG007 |
| SH 125 i SCOOPY (TAMBOR TRAS) | 125 | 09 | 12 | FD284 | G1050 | 1 | DF071 | W | WS | | MF051 | G2165 | - | | | KG071 |
| SH 125 i SCOOPY ABS | 125 | 13 | | FD344 | G1050 | 1 | DF007 | W | WS | | FD345 | G1050 | DF007 | W | | KG007 |
| SH 125 i SCOOPY CBS | 125 | 13 | | FD266 | G1050 | 1 | DF007 | W | WS | | FD345 | G1050 | DF007 | W | | |
| SH 125 MODE | 125 | 13 | | FD439 | G1050 | 1 | DF078 | W | | | MF051 | G2165 | - | | | KG078 |
| SH 125 SCOOPY | 125 | 01 | 04 | FD284 | G1050 | 1 | DF071 | W | WS | | MF051 | G2165 | - | | | KG071 |
| VT 125 SHADOW | 125 | 00 | | FD145 | G1050 | 1 | | | | | MF005 | G2165 | - | | | |
| XL 125 P3 ( I ) | 125 | 91 | 97 | FD074 | G1050 | 1 | | | | | MF003 | G2165 | - | | | |
| XL 125 R | 125 | 98 | 00 | FD164 | G1054 | 1 | DF017 | W | | | MF003 | G2165 | - | | | |
| XL 125 V VARADERO | 125 | 01 | | FD145 | G1050 | 1 | | | | | FD259 | G1050 | DF048 | W | | |
| XR 125 L | 125 | 03 | | FD164 | G1054 | 1 | | | | | MF003 | G2165 | - | | | |
| **HONDA BRAZIL** | | | | | | | | | | | | | | | | |
| LEAD 110 | 100 | 08 | | FD063 | G1050 | 1 | | | | | MF051 | G2165 | - | | | |
| BIZ 125 | 125 | 11 | | FD164 | G1054 | 1 | | | | | MF | | - | | | |
| **HONDA INDONESIA** | | | | | | | | | | | | | | | | |
| REVO 100 | 100 | 10 | | FD145 | G1050 | 1 | | | | | MF | | - | | | |
| BEAT CW | 110 | 12 | | | | 1 | DF078 | W | | | MF | | - | | | |
| BEAT FI CW | 110 | 12 | | | | 1 | DF078 | W | | | MF | | - | | | |
| BEAT FI SW | 110 | 12 | | | | 1 | DF078 | W | | | MF | | - | | | |
| BEAT SW | 110 | 12 | | | | 1 | DF078 | W | | | MF | | - | | | |
| NEW BLADE R 110 | 110 | 12 | | | | 1 | | | | | FD259 | G1050 | | | | |
| NEW BLADE RACING EDITION 110 | 110 | 12 | | | | 1 | | | | | FD259 | G1050 | | | | |
| NEW BLADE S 110 | 110 | 12 | | | | 1 | | | | | FD259 | G1050 | | | | |
| SCOOPY 110 | 110 | 12 | | | | 1 | DF078 | W | | | MF | | - | | | |
| SPACY HELM 110 | 110 | 12 | | | | 1 | DF078 | W | | | MF | | - | | | |
| VARIO CW 110 | 110 | 10 | | FD298 | G1050 | 1 | DF078 | W | | | MF | | - | | | |
| CBR 125 R | 125 | 11 | | FD298 | G1050 | 1 | | | | | FD259 | G1050 | DF048 | W | | |
| CITY SPORT ONE | 125 | 11 | | FD145 | G1050 | 1 | | | | | FD259 | G1050 | | | | |
| PCX 125 | 125 | 10 | | FD439 | G1050 | 1 | DF078 | W | | | MF051 | G2165 | - | | | KG078 |
| SUPRA - X 125 PGM FI | 125 | 10 | | | | 1 | | | | | FD259 | G1050 | | | | |
| SUPRA - X 125 R | 125 | 10 | | | | 1 | | | | | FD259 | G1050 | | | | |
| VARIO TECHNO 125 | 125 | 12 | | | | 1 | DF078 | W | | | MF | | - | | | |

| BRAND & MODEL • MARCA Y MODELO<br>MARCA E MODELLO • MARQUE ET MODÉLE | C.C. | YEAR | | FRONT FD MF | FRONT COMPOUND RECOMMENDED | FRONT N° | FRONT DF | FRONT OE | FRONT UPGRADE 1 | FRONT UPGRADE 2 | REAR FD MF | REAR COMPOUND RECOMMENDED | REAR DF | REAR OE | REAR UPGRADE | KITS KG |
|---|---|---|---|---|---|---|---|---|---|---|---|---|---|---|---|---|
| VARIO TECHNO 125 CBS | 125 | 12 | | | | 1 | DF078 | W | | | MF | | - | | | |
| **HONDA MALASIA** | | | | | | | | | | | | | | | | |
| WAVE 100 | 100 | 10 | | FD298 | G1050 | 1 | | | | | MF | | - | | | |
| SPACY 110 | 110 | 12 | | FD093 | G1054 | 1 | DF078 | W | | | MF | | - | | | |
| WAVE 110 | 110 | 12 | | FD259 | G1050 | 1 | | | | | MF | | - | | | |
| WAVE DASH 110 | 110 | 12 | | FD259 | G1050 | 1 | | | | | MF | | - | | | |
| WAVE DASH SE 110 | 110 | 12 | | FD259 | G1050 | 1 | | | | | MF | | - | | | |
| FUTURE 125 DD | 125 | 12 | | FD259 | G1050 | 1 | | | | | | | | | | |
| FUTURE 125 DT | 125 | 12 | | FD259 | G1050 | 1 | | | | | MF | | - | | | |
| FUTURE 125 DT SPOKE WHEEL | 125 | 12 | | FD259 | G1050 | 1 | | | | | MF | | - | | | |
| WAVE 125 | 125 | 10 | | FD298 | G1050 | 1 | | | | | MF | | - | | | |
| **HUSQVARNA** | | | | | | | | | | | | | | | | |
| E-go | EL | 12 | | FD138 | G1050 | 1 | | | | | FD441 | G1396 | | | | |
| **HYOSUNG** | | | | | | | | | | | | | | | | |
| FAST SF 50 | 50 | 00 | | FD094 | G1050 | 1 | | | | | MF | | - | | | |
| SENSE 50 | 50 | 98 | | FD094 | G1050 | 1 | | | | | MF | | - | | | |
| SF 50 RALLY | 50 | 03 | | FD094 | G1050 | 1 | | | | | MF | | - | | | |
| SUPER CAB PLUS 50 | 50 | 98 | | FD094 | G1050 | 1 | | | | | MF | | - | | | |
| EZ 100 | 100 | 98 | | FD094 | G1050 | 1 | | | | | MF | | - | | | |
| COMET GT 125 | 125 | 02 | | FD073 | G1050 | 1 | | | | | FD073 | G1050 | | | | |
| COMET GT 125 R | 125 | 06 | | FD073 | G1050 | 1 | | | | | FD073 | G1050 | | | | |
| EXCEED 125 | 125 | 03 | | FD153 | G1050 | 1 | | | | | MF | | - | | | |
| EXIV 125 | 125 | 12 | | FD176 | G1054 | 1 | | | | | FD094 | G1050 | | | | |
| GRAND PRIX 125 | 125 | 98 | | FD171 | G1050 | 1 | | | | | MF | | - | | | |
| GT 125 Pi | 125 | 13 | | FD073 | G1050 | 1 | | | | | FD073 | G1050 | | | | |
| GV 125 | 125 | 00 | 04 | FD086 | G1054 | 1 | | | | | MF | | - | | | |
| GV 125 AQUILA | 125 | 05 | | FD073 | G1050 | 1 | | | | | MF | | - | | | |
| KARION | 125 | 02 | | FD073 | G1050 | 1 | | | | | MF | | - | | | |
| XRX 125 | 125 | 00 | | FD073 | G1050 | 1 | | | | | MF | | - | | | |
| GEN 2.0 | EL | 10 | | FD094 | G1050 | 1 | | | | | MF | | - | | | |
| GEN 4.0 | EL | 10 | | FD145 | G1050 | 1 | | | | | FD145 | G1050 | | | | |
| **ITALJET** | | | | | | | | | | | | | | | | |
| 50 CRUISE | 50 | 94 | | FD136 | G1050 | 1 | DF466 | W | | | MF732 | G2165 | - | | | |
| 50 PISTA | 50 | 94 | | FD136 | G1050 | 1 | DF466 | W | | | MF732 | G2165 | - | | | |
| 50 SCOOP | 50 | 94 | | FD136 | G1050 | 1 | DF466 | W | | | MF732 | G2165 | - | | | |
| BAZOOKA | 50 | 94 | | FD136 | G1050 | 1 | DF466 | W | | | MF732 | G2165 | - | | | |
| DRAGSTER | 50 | 98 | | FD065 | G1050 | 1 | DF624 | W | | | FD065 | G1050 | DF625 | W | | |
| FORMULA | 50 | 94 | 99 | FD153 | G1050 | 1 | DF624 | W | | | FD153 | G1050 | DF625 | W | | |
| FORMULA, LC | 50 | 00 | | FD153 | G1050 | 1 | DF624 | W | | | FD153 | G1050 | DF625 | W | | |
| JET SET | 50 | 02 | | FD270 | G1050 | 1 | | | | | MF | | - | | | |
| PISTA 2 | 50 | 92 | | FD136 | G1050 | 1 | DF466 | W | | | MF732 | G2165 | - | | | |
| TORPEDO 50 | 50 | 00 | | FD065 | G1050 | 1 | | | | | MF | | - | | | |
| VELOCIFERO | 50 | 94 | | MF301 | G2165 | | - | | | | MF301 | G2165 | - | | | |
| YANKEE | 50 | 94 | | FD136 | G1050 | 1 | DF466 | W | | | MF | | - | | | |
| MILLENNIUM 100 | 100 | 02 | | FD270 | G1050 | 1 | | | | | MF | | - | | | |
| DRAGSTER | 125 | 00 | | FD065 | G1050 | 1 | DF624 | W | | | FD065 | G1050 | DF625 | W | | |
| FORMULA 125 | 125 | 97 | | FD065 | G1050 | 1 | DF624 | W | | | FD065 | G1050 | DF625 | W | | |
| JACK 125 | 125 | 07 | | FD284 | G1050 | 1 | | | | | FD284 | G1050 | | | | |
| JET SET | 125 | 02 | | FD270 | G1050 | 1 | | | | | MF | | - | | | |
| MILLENNIUM 125 | 125 | 00 | 01 | FD075 | G1050 | 1 | | | | | MF | | - | | | |
| MILLENNIUM 125 | 125 | 02 | | FD270 | G1050 | 1 | | | | | MF | | - | | | |
| TORPEDO 125 | 125 | 99 | 06 | FD065 | G1050 | 1 | | | | | MF | | - | | | |
| TORPEDO 125 | 125 | 07 | | FD284 | G1050 | 1 | | | | | MF | | - | | | |
| **JINCHENG** | | | | | | | | | | | | | | | | |
| JC 50 Q 5 | 50 | 05 | | FD136 | G1050 | 1 | | | | | MF | | - | | | |
| JC 50 Q 9 | 50 | 05 | | FD136 | G1050 | 1 | | | | | MF | | - | | | |
| VELOS | 50 | 05 | | FD133 | G1050 | 1 | | | | | MF | | - | | | |
| JC 70 Q 5 | 70 | 05 | | FD136 | G1050 | 1 | | | | | MF | | - | | | |
| JC 90-7 GORILLA | 90 | 05 | | FD136 | G1050 | 1 | | | | | MF | | - | | | |
| **KAWASAKI** | | | | | | | | | | | | | | | | |
| KSR 110 | 110 | 03 | | FD095 | G1050 | 1 | | | | | FD095 | G1050 | | | | |
| BN 125 | 125 | 05 | | FD145 | G1050 | 1 | | | | | MF | | - | | | |
| ELIMINATOR | 125 | 98 | 99 | FD095 | G1050 | 1 | | | | | MF151 | G2165 | - | | | |
| ELIMINATOR | 125 | 00 | | FD117 | G1050 | 1 | | | | | MF151 | G2165 | - | | | |
| KDX 125 SR | 125 | 90 | | FD094 | G1050 | 1 | DF164 | | | | FD114 | G1054 | DF152 | W | | |
| KLX 125 D-TRACKER | 125 | 10 | | FD086 | G1054 | 1 | | | | | FD095 | G1050 | | | | |
| KMX 125 | 125 | 99 | | FD177 | G1050 | 1 | | | | | FD075 | G1050 | | | | |
| **KAWASAKI INDONESIA** | | | | | | | | | | | | | | | | |
| EDGE R | 110 | 12 | | FD117 | G1050 | 1 | | | | | MF | | - | | | |
| EDGE VR | 110 | 12 | | FD117 | G1050 | 1 | | | | | MF | | - | | | |
| KSR 110 | 110 | 11 | | FD095 | G1050 | 1 | | | | | FD095 | G1050 | | | | |
| ATHLETE | 125 | 12 | | FD117 | G1050 | 1 | | | | | FD117 | G1050 | | | | |
| **KAWASAKI MALASIA** | | | | | | | | | | | | | | | | |



**OE:** Original equipment (original replacement disc) • **OE:** Equipo original (disco de remplazo del original) For other models years previous to 1990 visit **www.galferonline.es** • Para otros modelos anteriores al año 1990 visitar **www.galferonline.es**
For consult TÜV (ABE) type approvals visit **www.galfermoto.com --> DOWNALOAD --> TÜV CERTIFICATIONS** • Para consultar las homologaciones TÜV (ABE) visitar **www.galfermoto.com --> DESCARGAS --> CERTIFICACIONES TÜV**

| BRAND & MODEL • MARCA Y MODELO<br>MARCA E MODELLO • MARQUE ET MODÉLE | C.C. | YEAR | | FRONT FD MF | FRONT COMPOUND RECOMMENDED | FRONT N° | FRONT DF | FRONT OE | FRONT UPGRADE 1 | FRONT UPGRADE 2 | REAR FD MF | REAR COMPOUND RECOMMENDED | REAR DF | REAR OE | REAR UPGRADE | KITS KG |
|---|---|---|---|---|---|---|---|---|---|---|---|---|---|---|---|---|
| KSR 110 | 110 | 11 | | FD095 | G1050 | 1 | | | | | FD095 | G1050 | | | | |
| **KEEWAY** | | | | | | | | | | | | | | | | |
| ARN 50 | 50 | 10 | | FD012 | G1050 | 1 | | | | | MF | | - | | | |
| F ACT 50 / RACING | 50 | 07 | | FD175 | G1050 | 1 | | | | | MF | | - | | | |
| F NKD 50 | 50 | 09 | | FD175 | G1050 | 1 | | | | | MF | | - | | | |
| FLASH 50 | 50 | 07 | | FD175 | G1050 | 1 | | | | | MF | | - | | | |
| FOCUS 50 | 50 | 05 | | FD175 | G1050 | 1 | DF037 | W | RW | FLS | MF | | - | | | |
| GOCCIA 50 | 50 | 07 | | FD153 | G1050 | 1 | | | | | MF | | - | | | |
| HACKER | 50 | 08 | | FD153 | G1050 | 1 | | | | | MF | | - | | | |
| HURRICANE 50 | 50 | 05 | | FD094 | G1050 | 1 | | | | | MF | | - | | | |
| MATRIX 50 | 50 | 05 | | FD175 | G1050 | 1 | | | | | MF | | - | | | |
| PIXEL 50 | 50 | 08 | | FD094 | G1050 | 1 | | | | | MF | | - | | | |
| SWAN 50 | 50 | 05 | | FD094 | G1050 | 1 | | | | | MF | | - | | | |
| TX 50 | 50 | 10 | | FD162 | G1054 | 1 | | | | | FD048 | G1050 | | | | |
| X-RAY | 50 | 07 | | FD162 | G1054 | 1 | | | | | FD048 | G1050 | | | | |
| X-RAY SC SUPERMOTO | 50 | 07 | | FD162 | G1054 | 1 | | | | | FD048 | G1050 | | | | |
| ARN 125 | 125 | 05 | | FD153 | G1050 | 1 | | | | | MF | | - | | | |
| F ACT 125 / RACING | 125 | 08 | | FD175 | G1050 | 1 | | | | | MF | | - | | | |
| FOCUS 125 | 125 | 07 | | FD094 | G1050 | 1 | | | | | MF | | - | | | |
| HACKER 125 | 125 | 08 | | FD012 | G1050 | 1 | | | | | MF | | - | | | |
| K2 125 | 125 | 07 | | FD277 | G1050 | 1 | | | | | FD277 | G1050 | | | | |
| MATRIX 125 | 125 | 06 | 06 | FD094 | G1050 | 1 | | | | | MF | | - | | | |
| MATRIX 125 | 125 | 07 | | FD175 | G1050 | 1 | | | | | MF | | - | | | |
| OUTLOOK 125 | 125 | 07 | | FD187 | G1050 | 1 | DF007 | W | | | FD187 | G1050 | | | | |
| SILVER BLADE 125 | 125 | 07 | | FD138 | G1050 | 2 | | | | | FD220 | G1050 | | | | |
| SPEED 125 | 125 | 07 | | FD252 | G1050 | 1 | | | | | FD252 | G1050 | - | | | |
| SUPERLIGHT 125 | 125 | 07 | | FD187 | G1050 | 1 | | | | | MF | | - | | | |
| TX 125 | 125 | 10 | | FD162 | G1054 | 1 | | | | | FD048 | G1050 | | | | |
| VIVA 125 | 125 | 05 | | FD175 | G1050 | 1 | | | | | FD175 | G1050 | | | | |
| VIVA II 125 | 125 | 05 | | FD086 | G1054 | 1 | | | | | FD175 | G1050 | | | | |
| **KREIDLER** | | | | | | | | | | | | | | | | |
| E 50 FLORETT | 50 | 08 | | FD086 | G1054 | 1 | | | | | MF | | - | | | |
| G 50 FLORETT | 50 | 08 | | FD086 | G1054 | 1 | | | | | MF | | - | | | |
| ENDURO 125 DD | 125 | 08 | | FD086 | G1054 | 1 | | | | | FD095 | G1050 | | | | |
| G 125 FLORETT | 125 | 08 | | FD095 | G1050 | 1 | | | | | MF | | - | | | |
| NAKED 125 DD LEFT/IZQ. | 125 | 08 | | FD117 | G1050 | 2 | | | | | FD103 | G1054 | | | | |
| NAKED 125 DD RIGHT/DER. | 125 | 08 | | FD086 | G1054 | 2 | | | | | | | | | | |
| SUPERMOTO 125 DD | 125 | 08 | | FD086 | G1054 | 1 | | | | | FD095 | G1050 | | | | |
| **KTM** | | | | | | | | | | | | | | | | |
| 50 SCOOTER | 50 | 94 | | FD153 | G1050 | 1 | DF629 | W | RW | FLS | MF630 | G2165 | - | | | |
| 50 SM | 50 | 06 | | FD230 | G1054 | 1 | | | | | FD230 | G1054 | | | | |
| 125 DUKE | 125 | 11 | | FD450 | G1054 | 1 | DF789 | CW | | | FD165 | G1054 | DF790 | W | | |
| 125 DUKE ABS | 125 | 14 | | FD450 | G1054 | 1 | DF800 | CW | | | FD165 | G1054 | DF790 | W | | |
| RC 125 | 125 | 14 | | FD450 | G1054 | 1 | DF789 | CW | | | FD165 | G1054 | DF790 | W | | |
| FREERIDE | EL | 12 | 14 | FD458 | G1054 | 1 | DF796 | W | | | FD441 | G1396 | DF797 | W | | |
| FREERIDE E-SX | EL | 15 | | FD458 | G1054 | 1 | DF796 | W | | | FD441 | G1396 | DF797 | W | | |
| FREERIDE E-XC | EL | 15 | | FD458 | G1054 | 1 | DF796 | W | | | FD441 | G1396 | DF797 | W | | |
| **KYMCO** | | | | | | | | | | | | | | | | |
| 50 SNIPER | 50 | 94 | | FD166 | G1050 | 1 | DF018 | | | | MF002 | G2165 | - | | | |
| ACTIV 50 | 50 | 04 | | FD145 | G1050 | 1 | | | | | MF | | - | | | |
| ACTIV SR 50 | 50 | 08 | | FD073 | G1050 | 1 | | | | | MF | | - | | | |
| AGILITY 50 | 50 | 05 | | FD187 | G1050 | 1 | | | | | MF740 | G2165 | - | | | |
| AGILITY CARRY 50 | 50 | 14 | | FD261 | G1050 | 1 | DF878 | W | | | MF | | - | | | |
| AGILITY RS 50 | 50 | 09 | | FD187 | G1050 | 1 | | | | | MF740 | G2165 | - | | | |
| BET & WIN 50 | 50 | 01 | | FD145 | G1050 | 1 | | | | | FD145 | G1050 | | | | |
| CURIO CX | 50 | 94 | | FD166 | G1050 | 1 | DF018 | | | | MF002 | G2165 | - | | | |
| DINK 50 | 50 | 00 | | FD145 | G1050 | 1 | DF878 | W | | | MF | | - | | | |
| FEVER ZX 50 | 50 | 97 | | FD144 | G1050 | 1 | | | | | MF001 | G2165 | - | | | |
| FILLY 50 | 50 | 00 | | FD144 | G1050 | 1 | DF018 | | | | MF002 | G2165 | - | | | |
| FILLY 50 ELEGANCE | 50 | 03 | | FD187 | G1050 | 1 | DF878 | W | | | MF002 | G2165 | - | | | |
| GRAND DINK 50 | 50 | 04 | | FD145 | G1050 | 1 | | | | | MF | | - | | | |
| HEROISM 50 | 50 | 95 | | FD175 | G1050 | 1 | DF018 | | | | MF002 | G2165 | - | | | |
| JETIX | 50 | 09 | | FD073 | G1050 | 1 | | | | | FD145 | G1050 | | | | |
| K - PIPE | 50 | 12 | | FD117 | G1050 | 1 | | | | | MF | | - | | | |
| KB 50 | 50 | 95 | | FD144 | G1050 | 1 | DF018 | | | | MF002 | G2165 | - | | | |
| KYMCOSENTO 50 | 50 | 13 | | FD145 | G1050 | 1 | | | | | MF002 | G2165 | - | | | |
| LIKE | 50 | 09 | | FD187 | G1050 | 1 | | | | | MF | | - | | | |
| NEWSENTO 50 | 50 | 13 | | FD145 | G1050 | 1 | | | | | MF002 | G2165 | - | | | |
| NEXXON 50 | 50 | 07 | 08 | FD063 | G1050 | 1 | | | | | FD145 | G1050 | | | | |
| NEXXON 50 | 50 | 09 | | FD073 | G1050 | 1 | | | | | FD073 | G1050 | | | | |
| PEOPLE | 50 | 99 | | FD261 | G1050 | 1 | | | | | MF740 | G2165 | - | | | |
| SCOUT 50 | 50 | 99 | | FD144 | G1050 | 1 | | | | | MF002 | G2165 | - | | | |
| SOONER | 50 | 03 | | FD144 | G1050 | 1 | | | | | MF | | - | | | |

| BRAND & MODEL • MARCA Y MODELO<br>MARCA E MODELLO • MARQUE ET MODÉLE | C.C. | YEAR | | FRONT FD MF | FRONT COMPOUND RECOMMENDED | FRONT N° | FRONT DF | FRONT OE | FRONT UPGRADE 1 | FRONT UPGRADE 2 | REAR FD MF | REAR COMPOUND RECOMMENDED | REAR DF | REAR OE | REAR UPGRADE | KITS KG |
|---|---|---|---|---|---|---|---|---|---|---|---|---|---|---|---|---|
| SUPER 8 2T | 50 | 14 | | FD261 | G1050 | 1 | | | | | MF | | - | | | |
| SUPER 8 4T | 50 | 14 | | FD261 | G1050 | 1 | | | | | MF | | - | | | |
| SUPER 9 | 50 | 00 | | FD145 | G1050 | 1 | | | | | FD261 | G1050 | | | | |
| TB 50 OFF | 50 | 99 | | FD144 | G1050 | 1 | | | | | MF | | - | | | |
| TOP BOY 50 | 50 | 97 | | FD144 | G1050 | 1 | DF018 | | | | MF | | - | | | |
| VISA R | 50 | 11 | | FD075 | G1050 | 1 | | | | | MF002 | G2165 | - | | | |
| VITALITY 2T | 50 | 04 | | FD187 | G1050 | 1 | | | | | MF | | - | | | |
| VITALITY 4T | 50 | 05 | | FD187 | G1050 | 1 | | | | | MF | | - | | | |
| YAGER | 50 | 07 | | FD145 | G1050 | 1 | | | | | MF | | - | | | |
| YUP | 50 | 02 | 03 | FD144 | G1050 | 1 | DF878 | W | | | MF | | - | | | |
| YUP | 50 | 04 | | FD187 | G1050 | 1 | | | | | MF | | - | | | |
| ZX 50 | 50 | 99 | | FD144 | G1050 | 1 | DF878 | W | | | MF | | - | | | |
| TOP BOY 100 | 100 | 98 | | FD144 | G1050 | 1 | DF878 | W | | | MF | | - | | | |
| ACTIV 110 | 110 | 04 | | FD145 | G1050 | 1 | | | | | MF | | - | | | |
| AXR 110 | 110 | 04 | | FD145 | G1050 | 1 | | | | | MF | | - | | | |
| VISA R | 110 | 11 | | FD075 | G1050 | 1 | | | | | MF002 | G2165 | - | | | |
| 125 FREEWY | 125 | 94 | | FD166 | G1050 | 1 | | | | | MF | | - | | | |
| ACTIV 125 | 125 | 04 | | FD145 | G1050 | 1 | | | | | MF | | - | | | |
| AGILITY 125 | 125 | 06 | 08 | FD187 | G1050 | 1 | | | | | MF740 | G2165 | - | | | |
| AGILITY CITY 125 | 125 | 09 | | FD261 | G1050 | 1 | | | | | FD075 | G1050 | | | | |
| AGILITY RS 125 | 125 | 09 | | FD187 | G1050 | 1 | | | | | MF740 | G2165 | - | | | |
| BET & WIN 125 | 125 | 00 | | FD145 | G1050 | 1 | | | | | FD145 | G1050 | | | | |
| DINK 125 | 125 | 97 | | FD145 | G1050 | 1 | DF878 | W | | | FD145 | G1050 | DF878 | W | | |
| DOWNTOWN | 125 | 09 | 14 | FD266 | G1050 | 1 | | | | | FD438 | G1054 | | | | |
| DOWNTOWN | 125 | 15 | | FD245 | G1050 | 1 | | | | | FD438 | G1054 | DF307 | | | |
| GRAND DINK 125 | 125 | 02 | | FD145 | G1050 | 1 | | | | | FD145 | G1050 | | | | |
| GS 125i | 125 | 10 | | FD399 | G1050 | 1 | | | | | FD399 | G1050 | | | | |
| HEROISM | 125 | 95 | | FD175 | G1050 | 1 | DF018 | | | | MF002 | G2165 | - | | | |
| HIPSER 125 | 125 | 00 | | FD145 | G1050 | 1 | | | | | MF | | - | | | |
| JETIX | 125 | 10 | | FD073 | G1050 | 1 | | | | | FD145 | G1050 | | | | |
| K-PIPE | 125 | 12 | | FD117 | G1050 | 1 | | | | | MF | | - | | | |
| K-XCT | 125 | 13 | | FD266 | G1050 | 1 | | | | | FD474 | G1054 | | | | |
| LIKE | 125 | 09 | | FD187 | G1050 | 1 | | | | | FD145 | G1050 | | | | |
| MOVIE | 125 | 97 | 08 | FD187 | G1050 | 1 | | | | | MF740 | G2165 | - | | | |
| MOVIE 125 S i | 125 | 09 | | FD399 | G1050 | 1 | | | | | MF740 | G2165 | - | | | |
| NEXXON 125 | 125 | 07 | 08 | FD063 | G1050 | 1 | | | | | FD145 | G1050 | | | | |
| NEXXON 125 | 125 | 09 | | FD073 | G1050 | 1 | | | | | FD073 | G1050 | | | | |
| PEOPLE | 125 | 99 | | FD261 | G1050 | 1 | | | | | MF740 | G2165 | - | | | |
| PEOPLE GTI 125 | 125 | 10 | | FD344 | G1050 | 1 | | | | | FD399 | G1050 | | | | |
| QUANNON 125 | 125 | 07 | | FD145 | G1050 | 1 | | | | | FD145 | G1050 | | | | |
| QUANNON NAKED 125 | 125 | 09 | | FD145 | G1050 | 1 | | | | | FD145 | G1050 | | | | |
| SPIKE | 125 | 04 | | FD145 | G1050 | 1 | | | | | FD145 | G1050 | | | | |
| STRAIGHT 125 | 125 | 05 | 06 | FD145 | G1050 | 1 | | | | | MF | | - | | | |
| STRAIGHT 125 | 125 | 07 | | FD063 | G1050 | 1 | | | | | FD145 | G1050 | | | | |
| STRYKER 125 | 125 | 99 | | FD187 | G1050 | 1 | | | | | MF | | - | | | |
| SUPER 8 | 125 | 14 | | FD261 | G1050 | 1 | | | | | MF | | - | | | |
| SUPER 9 | 125 | 00 | | FD145 | G1050 | 1 | | | | | FD261 | G1050 | | | | |
| SUPER DINK 125i | 125 | 09 | | FD266 | G1050 | 1 | | | | | FD438 | G1054 | | | | |
| VIVIO 125 | 125 | 99 | | FD187 | G1050 | 1 | | | | | MF740 | G2165 | - | | | |
| YAGER 125 | 125 | 07 | 08 | FD145 | G1050 | 1 | | | | | FD145 | G1050 | | | | |
| YAGER GT 125 | 125 | 09 | 12 | FD145 | G1050 | 1 | | | | | FD145 | G1050 | | | | |
| YAGER GT 125 | 125 | 13 | | FD266 | G1050 | 1 | | | | | FD438 | G1054 | | | | |
| ZING | 125 | 00 | | FD145 | G1050 | 1 | | | | | MF | | - | | | |
| **LAMBRETTA** | | | | | | | | | | | | | | | | |
| PATO 50 N | 50 | 09 | | FD073 | G1050 | 1 | | | | | FD073 | G1050 | | | | |
| 125 DL | 125 | 14 | | MF766 | G2165 | | - | | | | MF766 | G2165 | - | | | |
| 125 LI | 125 | 14 | | MF765 | G2165 | | - | | | | MF765 | G2165 | - | | | |
| LN 125 | 125 | 12 | | FD188 | G1050 | 1 | | | | | MF | | - | | | |
| PATO 125 N | 125 | 09 | | FD073 | G1050 | 1 | | | | | FD073 | G1050 | | | | |
| **LANVERTTI** | | | | | | | | | | | | | | | | |
| NEON 125 | 125 | 06 | | FD095 | G1050 | 1 | | | | | MF | | - | | | |
| **LAVERDA** | | | | | | | | | | | | | | | | |
| 50 GAUCHO | 50 | 90 | | FD012 | G1050 | 1 | | | | | FD012 | G1050 | | | | |
| 125 NAVARRO | 125 | 90 | | FD089 | G1054 | 1 | | | | | FD012 | G1050 | | | | |
| 125 TOLEDO | 125 | 90 | | FD089 | G1054 | 1 | | | | | MF684 | G2165 | - | | | |
| **LML** | | | | | | | | | | | | | | | | |
| STAR 2T (TODAS) | 125 | 10 | | FD200 | G1050 | 1 | DF650 | W | RW | | MF601 | G2165 | - | | | |
| STAR 4T (TODAS) | 125 | 10 | | FD200 | G1050 | 1 | DF650 | W | RW | | MF601 | G2165 | - | | | |
| STAR BICOLOR VINTAGE 4T | 125 | 10 | | FD200 | G1050 | 1 | DF650 | W | RW | | MF601 | G2165 | - | | | |
| STAR GT 2T | 125 | 10 | | FD200 | G1050 | 1 | DF650 | W | RW | | MF601 | G2165 | - | | | |
| STAR GT 4T | 125 | 10 | | FD200 | G1050 | 1 | DF650 | W | RW | | MF601 | G2165 | - | | | |
| STAR MAT SERIES 4T | 125 | 10 | | FD200 | G1050 | 1 | DF650 | W | RW | | MF601 | G2165 | - | | | |
| STAR RS 4T | 125 | 10 | | FD200 | G1050 | 1 | DF650 | W | RW | | MF601 | G2165 | - | | | |



**OE:** Original equipment (original replacement disc) • **OE:** Equipo original (disco de remplazo del original) For other models years previous to 1990 visit **www.galferonline.es** • Para otros modelos anteriores al año 1990 visitar **www.galferonline.es**
For consult TÜV (ABE) type approvals visit **www.galfermoto.com --> DOWNALOAD --> TÜV CERTIFICATIONS** • Para consultar las homologaciones TÜV (ABE) visitar **www.galfermoto.com --> DESCARGAS --> CERTIFICACIONES TÜV**

| BRAND & MODEL • MARCA Y MODELO<br>MARCA E MODELLO • MARQUE ET MODÉLE | C.C. | YEAR | | FRONT FD MF | FRONT COMPOUND RECOMMENDED | FRONT N° | FRONT DF | FRONT OE | FRONT UPGRADE 1 | FRONT UPGRADE 2 | REAR FD MF | REAR COMPOUND RECOMMENDED | REAR DF | REAR OE | REAR UPGRADE | KITS KG |
|---|---|---|---|---|---|---|---|---|---|---|---|---|---|---|---|---|
| **LONCIN** | | | | | | | | | | | | | | | | |
| LX 110 | 110 | 02 | | FD145 | G1050 | 1 | | | | | MF | | - | | | |
| LX 125 | 125 | 02 | | FD145 | G1050 | 1 | | | | | MF | | - | | | |
| **MACBOR** | | | | | | | | | | | | | | | | |
| 565 | 50 | 04 | | FD224 | G1050 | 1 | | | | | FD065 | G1050 | | | | |
| 510 RACING | 50 | 04 | | FD224 | G1050 | 1 | | | | | FD065 | G1050 | | | | |
| 512 RACING | 50 | 04 | | FD224 | G1050 | 1 | | | | | FD065 | G1050 | | | | |
| 515 RACING | 50 | 04 | | FD224 | G1050 | 1 | | | | | FD065 | G1050 | | | | |
| **MALAGUTI** | | | | | | | | | | | | | | | | |
| 50 CENTRO SL | 50 | 94 | | FD152 | G1050 | 1 | DF650 | W | RW | | MF630 | G2165 | - | | | |
| 50 CUSTOM FOX | 50 | 93 | | FD071 | G1054 | 1 | | | | | MF | | - | | | |
| 50 F10 | 50 | 96 | | FD153 | G1050 | 1 | DF642 | W | | | MF630 | G2165 | - | | | |
| 50 MGX | 50 | 94 | | FD135 | G1050 | 1 | | | | | MF | | - | | | |
| 50 RST | 50 | 90 | | FD071 | G1054 | 1 | | | | | FD071 | G1054 | | | | |
| CIAK | 50 | 99 | | FD153 | G1050 | 1 | | | | | FD200 | G1050 | | | | |
| CROSSER 50 | 50 | 99 | | FD071 | G1054 | 1 | DF649 | W | | | MF | | - | | | |
| DRAKON NKD | 50 | 05 | | FD220 | G1050 | 1 | | | | | FD065 | G1050 | | | | |
| F 15 FIRE FOX | 50 | 96 | 97 | FD071 | G1054 | 1 | DF649 | W | | | MF630 | G2165 | - | | | |
| F 15 FIRE FOX LC | 50 | 98 | | FD084 | G1050 | 1 | | | | | FD152 | G1050 | DF649 | W | | |
| F10 | 50 | 91 | | FD135 | G1050 | 1 | DF642 | W | | | MF630 | G2165 | - | | | |
| F12 PHANTOM | 50 | 98 | | FD084 | G1050 | 1 | DF649 | W | | | MF002 | G2165 | - | | | |
| F12 PHANTOM AIRE/AGUA 50 | 50 | 94 | 97 | FD071 | G1054 | 1 | DF649 | W | | | MF002 | G2165 | - | | | |
| XSM | 50 | 05 | | FD162 | G1054 | 1 | | | | | FD065 | G1050 | | | | |
| XTM | 50 | 04 | | FD065 | G1050 | 1 | | | | | FD065 | G1050 | | | | |
| YESTERDAY 50 | 50 | 98 | | FD153 | G1050 | 1 | DF642 | W | | | MF | | - | | | |
| 80 DUNE | 80 | 93 | | FD074 | G1050 | 1 | | | | | MF | | - | | | |
| 80 F10 | 80 | 92 | | FD135 | G1050 | 1 | | | | | MF | | - | | | |
| CIAK | 100 | 99 | | FD153 | G1050 | 1 | | | | | FD153 | G1050 | | | | |
| F12 PHANTOM | 100 | 00 | | FD153 | G1050 | 1 | | | | | FD153 | G1050 | DF649 | W | | |
| 125 RUNNER RALLY | 125 | 93 | | FD074 | G1050 | 1 | | | | | MF712 | G2165 | - | | | |
| CIAK | 125 | 03 | | FD153 | G1050 | 1 | | | | | FD153 | G1050 | | | | |
| F 18 WARRIOR | 125 | 00 | 03 | FD153 | G1050 | 1 | | | | | FD228 | G1050 | DF649 | W | | |
| MADISON 125 | 125 | 99 | 05 | FD162 | G1054 | 1 | DF622 | W | | | FD228 | G1050 | | | | |
| MADISON 125 R 125 | 125 | 06 | 06 | FD074 | G1050 | 1 | | | | | FD228 | G1050 | | | | |
| MADISON 3 125 | 125 | 07 | | FD162 | G1054 | 1 | | | | | FD220 | G1050 | | | | |
| PHANTOM MAX 125 | 125 | 04 | | FD162 | G1054 | 1 | DF622 | W | | | FD220 | G1050 | DF622 | W | | |
| **MBK MOTOBEKANE** | | | | | | | | | | | | | | | | |
| BOOSTER N.G. | 50 | 99 | | FD153 | G1050 | 1 | DF473 | W | RW | WS | MF750 | G2165 | - | | | |
| BOOSTER NAKED | 50 | 06 | | FD153 | G1050 | 1 | DF473 | W | RW | WS | MF750 | G2165 | - | | | KG473 |
| BOOSTER SPIRIT | 50 | 98 | | FD153 | G1050 | 1 | DF473 | W | RW | WS | MF750 | G2165 | - | | | |
| BOOSTER WHEEL 12" | 50 | 06 | | FD153 | G1050 | 1 | DF473 | W | RW | WS | MF750 | G2165 | - | | | KG473 |
| BOOSTER-R | 50 | 94 | | FD153 | G1050 | 1 | DF473 | W | RW | WS | MF750 | G2165 | - | | | |
| EVOLIS | 50 | 92 | | FD153 | G1050 | 1 | DF466 | W | | | MF458 | G2165 | - | | | |
| FIZZ | 50 | 94 | | FD153 | G1050 | 1 | DF466 | W | | | MF453 | G2165 | - | | | |
| FLIPPER | 50 | 99 | | FD153 | G1050 | 1 | DF015 | W | | | MF | | - | | | |
| MACH G/R | 50 | 02 | | FD171 | G1050 | 1 | DF629 | W | RW | FLS | MF | | - | | | |
| NITRO | 50 | 97 | | FD171 | G1050 | 1 | DF037 | W | RW | FLS | FD206 | G1050 | DF037 | W | RW | |
| OVETTO | 50 | 98 | | FD153 | G1050 | 1 | DF629 | W | RW | FLS | MF458 | G2165 | - | | | |
| STUNT | 50 | 00 | | FD206 | G1050 | 1 | DF037 | W | RW | FLS | MF | | - | | | |
| TARGET | 50 | 92 | | FD136 | G1050 | 1 | DF466 | W | | | MF458 | G2165 | - | | | |
| X-LIMIT | 50 | 04 | | FD162 | G1054 | 1 | | | | | FD065 | G1050 | | | | |
| X-POWER | 50 | 99 | 02 | FD117 | G1050 | 1 | DF470 | W | | | FD079 | G1050 | | | | |
| X-POWER | 50 | 03 | | FD162 | G1054 | 1 | | | | | FD065 | G1050 | | | | |
| BOOSTER | 100 | 99 | 99 | FD153 | G1050 | 1 | DF473 | W | RW | WS | MF750 | G2165 | - | | | |
| BOOSTER | 100 | 00 | | FD136 | G1050 | 1 | | | | | MF640 | G2165 | - | | | |
| CITYLINER | 125 | 09 | | FD355 | G1050 | 1 | | | | | FD220 | G1050 | | | | |
| DOODO | 125 | 00 | | FD153 | G1050 | 1 | DF492 | W | | | MF640 | G2165 | - | | | |
| FLAME | 125 | 00 | 03 | FD079 | G1050 | 1 | | | | | MF458 | G2165 | - | | | |
| FLAME X | 125 | 04 | | FD342 | G1050 | 1 | | | | | MF458 | G2165 | - | | | |
| SKYCRUISER | 125 | 06 | 09 | FD355 | G1050 | 1 | DF500 | W | | | FD220 | G1050 | DF524 | W | | KG500 |
| SKYCRUISER | 125 | 10 | | FD140 | G1050 | 1 | DF500 | W | | | FD220 | G1050 | DF524 | W | | |
| SKYCRUISER ABS | 125 | 11 | | FD140 | G1050 | 1 | DF500 | W | | | FD214 | G1050 | DF524 | W | | |
| SKYLINER | 125 | 99 | 00 | FD138 | G1050 | 1 | DF492 | W | | | MF640 | G2165 | - | | | |
| SKYLINER | 125 | 01 | | FD138 | G1050 | 1 | DF492 | W | | | FD220 | G1050 | | | | |
| THUNDER | 125 | 01 | | FD138 | G1050 | 1 | | | | | FD220 | G1050 | | | | |
| X - OVER | 125 | 10 | | FD473 | G1054 | 1 | | | | | MF458 | G2165 | - | | | |
| **MECATECNO** | | | | | | | | | | | | | | | | |
| 50 ALEVIN | 50 | 94 | | FD065 | G1050 | 1 | | | | | MF | | - | | | |
| 50 RACING CR-7 | 50 | 93 | | FD065 | G1050 | 1 | | | | | MF | | - | | | |
| 50 RACING CR-8 | 50 | 93 | | FD065 | G1050 | 1 | | | | | MF | | - | | | |
| 75 CR | 75 | 91 | | FD065 | G1050 | 1 | | | | | MF | | - | | | |
| **METRAKIT** | | | | | | | | | | | | | | | | |
| BIG FOOT | 50 | 08 | | FD265 | G1054 | 1 | | | | | FD230 | G1054 | | | | |

| BRAND & MODEL • MARCA Y MODELO<br>MARCA E MODELLO • MARQUE ET MODÉLE | C.C. | YEAR | | FRONT FD MF | FRONT COMPOUND RECOMMENDED | FRONT N° | FRONT DF | FRONT OE | FRONT UPGRADE 1 | FRONT UPGRADE 2 | REAR FD MF | REAR COMPOUND RECOMMENDED | REAR DF | REAR OE | REAR UPGRADE | KITS KG |
|---|---|---|---|---|---|---|---|---|---|---|---|---|---|---|---|---|
| FUN 2 STROKE | 50 | 05 | | FD065 | G1050 | 1 | | | | | FD224 | G1050 | | | | |
| FUN 4 STROKE | 50 | 05 | | FD065 | G1050 | 1 | | | | | FD224 | G1050 | | | | |
| MINI GP | 50 | 03 | | FD065 | G1050 | 1 | | | | | FD224 | G1050 | | | | |
| MINI GP 50 R | 50 | 08 | | FD360 | G1054 | 1 | | | | | FD224 | G1050 | | | | |
| MINI GP XL | 50 | 05 | | FD220 | G1050 | 1 | | | | | FD224 | G1050 | | | | |
| MONGOOSE | 50 | 08 | | FD265 | G1054 | 1 | | | | | FD230 | G1054 | | | | |
| PRO | 50 | 08 | | FD265 | G1054 | 1 | | | | | FD230 | G1054 | | | | |
| MINI GP 70 R | 70 | 08 | | FD360 | G1054 | 1 | | | | | FD224 | G1050 | | | | |
| MINI GP SP 70 | 70 | 08 | | FD200 | G1050 | 1 | | | | | FD224 | G1050 | | | | |
| MINI GP XL 80 PRO | 80 | 04 | | FD223 | G1054 | 1 | | | | | FD224 | G1050 | | | | |
| MINI GP XL 80 R | 80 | 08 | | FD341 | G1050 | 1 | | | | | FD224 | G1050 | | | | |
| XL 08 | 80 | 08 | | FD360 | G1054 | 1 | | | | | FD224 | G1050 | | | | |
| PRE GP 125 | 125 | 07 | | FD341 | G1050 | 1 | | | | | FD224 | G1050 | | | | |
| **MINELLI** | | | | | | | | | | | | | | | | |
| OMEGA 125 | 125 | 06 | | FD169 | G1050 | 1 | | | | | FD214 | G1050 | | | | |
| **MODENAS** | | | | | | | | | | | | | | | | |
| KRISS 115 | 115 | 99 | | FD145 | G1050 | 1 | | | | | MF | | - | | | |
| **MONKEY BIKE** | | | | | | | | | | | | | | | | |
| MB 50 D | 50 | 06 | | FD136 | G1050 | 1 | DF466 | W | | | MF | | - | | | |
| MB 50 G | 50 | 06 | | FD136 | G1050 | 1 | DF466 | W | | | MF | | - | | | |
| MB 50 R | 50 | 06 | | FD136 | G1050 | 1 | DF466 | W | | | MF | | - | | | |
| MB 90 R | 90 | 06 | | FD136 | G1050 | 1 | DF466 | W | | | MF | | - | | | |
| MB 110 D | 110 | 06 | | FD136 | G1050 | 1 | DF466 | W | | | MF | | - | | | |
| MB 110 G | 110 | 06 | | FD136 | G1050 | 1 | DF466 | W | | | MF | | - | | | |
| MB 110 M | 110 | 06 | | FD136 | G1050 | 1 | DF466 | W | | | MF | | - | | | |
| MB 125 SM | 125 | 06 | | FD162 | G1054 | 1 | | | | | FD065 | G1050 | | | | |
| MB 125 TR | 125 | 06 | | FD162 | G1054 | 1 | | | | | FD065 | G1050 | | | | |
| MB OCTOPUS 125 | 125 | 06 | | FD095 | G1050 | 1 | | | | | MF | | - | | | |
| **MOTO GUZZI** | | | | | | | | | | | | | | | | |
| 125 BX | 125 | 92 | | FD012 | G1050 | 1 | | | | | FD012 | G1050 | | | | |
| 125 C | 125 | 92 | | FD012 | G1050 | 1 | | | | | MF | | - | | | |
| MOTOM | | | | | | | | | | | | | | | | |
| GYPSY | 50 | 07 | | FD175 | G1050 | 1 | | | | | MF | | - | | | |
| DOLCEVITA | 125 | 07 | | FD175 | G1050 | 1 | | | | | FD073 | G1050 | | | | |
| LAMBRETTA | 125 | 08 | | FD175 | G1050 | 1 | | | | | MF | | - | | | |
| TRANSCITY | 125 | 07 | | FD169 | G1050 | 1 | | | | | FD073 | G1050 | | | | |
| **MOTORHISPANIA** | | | | | | | | | | | | | | | | |
| FURIA | 50 | 99 | | FD065 | G1050 | 1 | | | | | FD065 | G1050 | | | | |
| MH 10 50 LC | 50 | 12 | | FD075 | G1050 | 1 | DF888 | W | | | FD075 | G1050 | DF889 | W | | |
| MH 10 50 LC SM | 50 | 12 | | FD075 | G1050 | 1 | DF888 | W | | | FD075 | G1050 | DF861 | W | | |
| RX 50 R | 50 | 08 | | FD341 | G1050 | 1 | DF860 | W | | | FD252 | G1050 | DF861 | W | | |
| RX RACING | 50 | 99 | | FD133 | G1050 | 1 | | | | | FD065 | G1050 | | | | |
| RYZ ENDURO | 50 | 99 | | FD065 | G1050 | 1 | | | | | FD065 | G1050 | DF675 | W | | |
| RYZ PRO ENDURO | 50 | 09 | | FD133 | G1050 | 1 | DF674 | W | FLW | | FD065 | G1050 | | | | |
| RYZ PRO SM | 50 | 09 | | FD133 | G1050 | 1 | DF811 | W | | | FD065 | G1050 | | | | |
| RYZ SM | 50 | 99 | 04 | FD133 | G1050 | 1 | DF674 | W | FLW | | FD065 | G1050 | DF675 | W | | |
| RYZ SM | 50 | 05 | | FD133 | G1050 | 1 | DF888 | W | | | FD065 | G1050 | | | | |
| TRAIL 50 LASER AIRE, AGUA | 50 | 93 | | FD065 | G1050 | 1 | | | | | MF | | - | | | |
| URBAN BIKE | 50 | 04 | | FD133 | G1050 | 1 | DF811 | W | | | FD065 | G1050 | DF861 | W | | |
| XR G-30 | 50 | 93 | | FD065 | G1050 | 1 | | | | | MF | | - | | | |
| ARENA ENDURO | 125 | 05 | | FD065 | G1050 | 1 | | | | | FD065 | G1050 | | | | |
| ARENA MOTARD | 125 | 05 | | FD133 | G1050 | 1 | | | | | FD065 | G1050 | | | | |
| DUNA SPORT CITY | 125 | 09 | | FD162 | G1054 | 1 | | | | | FD252 | G1050 | | | | |
| KN 1 NAKED | 125 | 10 | | FD341 | G1050 | 1 | DF860 | W | | | FD252 | G1050 | DF861 | W | | |
| KN 2 NAKED | 125 | 14 | | FD341 | G1050 | 1 | DF860 | W | | | FD252 | G1050 | DF861 | W | | |
| MH 7 NAKED | 125 | 07 | | FD341 | G1050 | 1 | DF860 | W | | | FD252 | G1050 | DF861 | W | | |
| RX 125 R | 125 | 08 | | FD341 | G1050 | 1 | DF860 | W | | | FD252 | G1050 | DF861 | W | | |
| **MOTRON** | | | | | | | | | | | | | | | | |
| GTO MAX, WF, R | 50 | 94 | | FD071 | G1054 | 1 | | | | | MF | | - | | | |
| RZ | 50 | 94 | | FD135 | G1050 | 1 | | | | | MF | | - | | | |
| XLE | 50 | 94 | | FD084 | G1050 | 1 | | | | | MF | | - | | | |
| **MZ/MuZ** | | | | | | | | | | | | | | | | |
| MOSKITO | 50 | 00 | | FD094 | G1050 | 1 | | | | | MF | | - | | | |
| **P.G.O.** | | | | | | | | | | | | | | | | |
| BIG MAX 50 | 50 | 95 | | FD136 | G1050 | 1 | DF466 | W | | | MF641 | G2165 | - | | | |
| COMET | 50 | 92 | | FD094 | G1050 | 1 | | | | | MF641 | G2165 | - | | | |
| G-MAX | 50 | 05 | | FD188 | G1050 | 1 | | | | | MF | | - | | | |
| GALAXY | 50 | 93 | | FD094 | G1050 | 1 | | | | | MF641 | G2165 | - | | | |
| LIBRA 50 | 50 | 09 | | FD188 | G1050 | 1 | | | | | MF | | - | | | |
| LIGERO 50 | 50 | 08 | | FD188 | G1050 | 1 | | | | | MF | | - | | | |
| MEGA FIFTY | 50 | 99 | | FD094 | G1050 | 1 | DF466 | W | | | MF641 | G2165 | - | | | |
| PMS | 50 | 99 | | FD188 | G1050 | 1 | DF037 | W | RW | FLS | MF641 | G2165 | - | | | |
| PMX | 50 | 99 | | FD136 | G1050 | 1 | DF466 | W | | | MF641 | G2165 | - | | | |



**OE:** Original equipment (original replacement disc) • **OE:** Equipo original (disco de remplazo del original) For other models years previous to 1990 visit **www.galferonline.es** • Para otros modelos anteriores al año 1990 visitar **www.galferonline.es**
For consult TÜV (ABE) type approvals visit **www.galfermoto.com --> DOWNALOAD --> TÜV CERTIFICATIONS** • Para consultar las homologaciones TÜV (ABE) visitar **www.galfermoto.com --> DESCARGAS --> CERTIFICACIONES TÜV**

| BRAND & MODEL • MARCA Y MODELO<br>MARCA E MODELLO • MARQUE ET MODÉLE | C.C. | YEAR | | FRONT FD MF | FRONT COMPOUND RECOMMENDED | FRONT N° | FRONT DF | FRONT OE | FRONT UPGRADE 1 | FRONT UPGRADE 2 | REAR FD MF | REAR COMPOUND RECOMMENDED | REAR DF | REAR OE | REAR UPGRADE | KITS KG |
|---|---|---|---|---|---|---|---|---|---|---|---|---|---|---|---|---|
| STAR | 50 | 93 | | MF002 | G2165 | | - | | | | MF609 | G2165 | - | | | |
| STAR 50 | 50 | 95 | | FD094 | G1050 | 1 | | | | | MF609 | G2165 | - | | | |
| T-REX 50 | 50 | 99 | | FD188 | G1050 | 1 | DF037 | W | RW | FLS | MF641 | G2165 | - | | | |
| BIG MAX 80 | 80 | 95 | | FD136 | G1050 | 1 | | | | | MF609 | G2165 | - | | | |
| STAR 80 | 80 | 95 | | FD094 | G1050 | 1 | | | | | MF609 | G2165 | - | | | |
| BIG MAX 90 | 90 | 95 | | FD136 | G1050 | 1 | | | | | MF641 | G2165 | - | | | |
| PMS | 110 | 99 | | FD188 | G1050 | 1 | DF037 | W | RW | FLS | MF | | - | | | |
| T-REX 110 | 110 | 99 | | FD188 | G1050 | 1 | DF037 | W | RW | FLS | MF | | - | | | |
| G-MAX | 125 | 05 | | FD068 | G1050 | 1 | | | | | FD145 | G1050 | | | | |
| LIBRA 125 | 125 | 09 | | FD188 | G1050 | 1 | | | | | MF | | - | | | |
| LIGERO 125 | 125 | 06 | | FD188 | G1050 | 1 | | | | | MF | | - | | | |
| STAR 125 | 125 | 95 | | FD145 | G1050 | 1 | | | | | FD012 | G1050 | | | | |
| T-REX 125 4-T | 125 | 99 | | FD188 | G1050 | 1 | DF037 | W | RW | FLS | MF | | - | | | |
| **PEUGEOT** | | | | | | | | | | | | | | | | |
| BUXY 50 | 50 | 94 | | FD153 | G1050 | 1 | DF649 | W | | | MF002 | G2165 | - | | | |
| DJANGO EVASION | 50 | 15 | | FD187 | G1050 | 1 | | | | | MF | | - | | | |
| DJANGO HERITAGE | 50 | 15 | | FD187 | G1050 | 1 | | | | | MF | | - | | | |
| ELISTAR AVANTAGE 2 | 50 | 05 | | FD065 | G1050 | 1 | | | | | FD270 | G1050 | | | | |
| ELISTAR TSDI | 50 | 02 | | FD065 | G1050 | 1 | | | | | FD270 | G1050 | | | | |
| ELYSEO | 50 | 98 | | FD065 | G1050 | 1 | DF649 | W | | | MF002 | G2165 | - | | | |
| FOX | 50 | 95 | | FD065 | G1050 | 1 | | | | | MF760 | G2165 | - | | | |
| JET C TECH | 50 | 11 | | FD065 | G1050 | 1 | | | | | FD065 | G1050 | | | | |
| JET DARKSIDE | 50 | 11 | | FD065 | G1050 | 1 | | | | | FD065 | G1050 | | | | |
| JET FORCE | 50 | 03 | | FD065 | G1050 | 1 | | | | | FD065 | G1050 | | | | |
| JET H2i | 50 | 11 | | FD065 | G1050 | 1 | | | | | FD065 | G1050 | | | | |
| JET ICEBLADE | 50 | 11 | | FD065 | G1050 | 1 | | | | | FD065 | G1050 | | | | |
| KISBEE | 50 | 10 | | FD094 | G1050 | 1 | | | | | MF | | - | | | |
| LOOXOR | 50 | 01 | | FD065 | G1050 | 1 | | | | | MF002 | G2165 | - | | | |
| LUDIX 50 ELEGANCE/SNAKE/TREND | 50 | 04 | | FD065 | G1050 | 1 | | | | | MF002 | G2165 | - | | | |
| LXR 50 | 50 | 10 | | FD188 | G1050 | 1 | | | | | FD399 | G1050 | | | | |
| METROPOLIS 50 | 50 | 91 | | MF002 | G2165 | | - | | | | MF609 | G2165 | - | | | |
| NEW VIVACITY 50 | 50 | 08 | | FD095 | G1050 | 1 | | | | | MF | | - | | | |
| NK 7 | 50 | 10 | | FD341 | G1050 | 1 | | | | | FD252 | G1050 | | | | |
| SPEEDDAKE | 50 | 95 | | FD153 | G1050 | 1 | DF649 | W | | | MF002 | G2165 | - | | | |
| SPEEDFIGHT | 50 | 96 | | FD094 | G1050 | 1 | DF863 | W | RW | | MF002 | G2165 | - | | | |
| SPEEDFIGHT 2 | 50 | 00 | | FD094 | G1050 | 1 | DF863 | W | RW | | MF002 | G2165 | - | | | |
| SPEEDFIGHT 3 | 50 | 09 | | FD073 | G1050 | 1 | | | | | MF002 | G2165 | - | | | |
| SPEEDFIGHT 3 LC | 50 | 09 | | FD073 | G1050 | 1 | | | | | FD220 | G1050 | | | | |
| SPEEDFIGHT LC | 50 | 97 | | FD065 | G1050 | 1 | DF863 | W | RW | | FD065 | G1050 | DF863 | W | RW | |
| SQUAB | 50 | 95 | | FD065 | G1050 | 1 | DF629 | W | RW | FLS | MF002 | G2165 | - | | | |
| SV 50 APS, GEO | 50 | 91 | | MF002 | G2165 | | - | | | | MF002 | G2165 | - | | | |
| SV 50 D, SPORT, T | 50 | 94 | | FD147 | G1050 | 1 | DF649 | W | | | MF002 | G2165 | - | | | |
| SV 50 GEO | 50 | 92 | 92 | FD147 | G1050 | 1 | DF649 | W | | | MF002 | G2165 | - | | | |
| SV 50 GEO | 50 | 93 | | FD144 | G1050 | 1 | DF649 | W | | | MF002 | G2165 | - | | | |
| SV EXECUTIVE | 50 | 95 | | FD065 | G1050 | 1 | | | | | MF002 | G2165 | - | | | |
| SV GEO | 50 | 91 | | MF002 | G2165 | | - | | | | MF002 | G2165 | - | | | |
| TREKKER OFF ROAD | 50 | 97 | | FD094 | G1050 | 1 | DF649 | W | | | MF002 | G2165 | - | | | |
| TREKKER ROAD | 50 | 97 | | FD065 | G1050 | 1 | DF649 | W | | | MF002 | G2165 | - | | | |
| TWEET 50 | 50 | 10 | | FD188 | G1050 | 1 | | | | | MF | | - | | | |
| V-CLIC 50 | 50 | 08 | | FD136 | G1050 | 1 | | | | | MF002 | G2165 | - | | | |
| VIVACITY | 50 | 99 | | FD065 | G1050 | 1 | DF649 | W | | | MF002 | G2165 | - | | | |
| VIVACITY SIXTIES | 50 | 10 | | FD175 | G1050 | 1 | | | | | MF002 | G2165 | - | | | |
| XP 6 ENDURO | 50 | 05 | | FD065 | G1050 | 1 | | | | | FD065 | G1050 | | | | |
| XP 6 SM | 50 | 05 | | FD065 | G1050 | 1 | | | | | FD065 | G1050 | | | | |
| XP 6 TOP ROAD | 50 | 06 | | FD065 | G1050 | 1 | | | | | FD065 | G1050 | | | | |
| XPS ENDURO | 50 | 05 | | FD065 | G1050 | 1 | | | | | FD065 | G1050 | | | | |
| XPS SM | 50 | 05 | | FD162 | G1054 | 1 | DF892 | W | | | FD065 | G1050 | | | | |
| XPS STREET | 50 | 05 | | FD162 | G1054 | 1 | | | | | FD065 | G1050 | | | | |
| XR 6 | 50 | 05 | | FD133 | G1050 | 1 | | | | | FD065 | G1050 | | | | |
| XR 7 | 50 | 08 | 09 | FD341 | G1050 | 1 | | | | | FD065 | G1050 | | | | |
| XR 7 | 50 | 10 | | FD341 | G1050 | 1 | | | | | FD252 | G1050 | | | | |
| ZENITH | 50 | 94 | 94 | FD147 | G1050 | 1 | DF642 | W | | | MF002 | G2165 | - | | | |
| ZENITH 50 | 50 | 93 | 93 | FD147 | G1050 | 1 | DF642 | W | | | MF002 | G2165 | - | | | |
| ZENITH LM | 50 | 95 | | FD065 | G1050 | 1 | DF642 | W | | | MF002 | G2165 | - | | | |
| METROPOLIS 80 | 80 | 91 | | MF002 | G2165 | | - | | | | MF609 | G2165 | - | | | |
| SPEEDFIGHT 80 | 80 | 96 | | FD094 | G1050 | 1 | DF863 | W | RW | | MF002 | G2165 | - | | | |
| ELYSEO 100 | 100 | 98 | | FD065 | G1050 | 1 | DF864 | W | | | MF002 | G2165 | - | | | |
| LOOXOR | 100 | 01 | | FD065 | G1050 | 1 | | | | | FD065 | G1050 | DF649 | W | | |
| SPEEDFIGHT 100 | 100 | 97 | | FD065 | G1050 | 1 | DF863 | W | RW | | FD065 | G1050 | DF863 | W | RW | |
| SPEEDFIGHT 100 | 100 | 97 | | FD094 | G1050 | 1 | DF863 | W | RW | | FD065 | G1050 | DF863 | W | RW | |
| TREKKER ROAD | 100 | 98 | | FD065 | G1050 | 1 | DF649 | W | | | MF002 | G2165 | - | | | |
| VIVACITY | 100 | 99 | | FD065 | G1050 | 1 | DF649 | W | | | MF002 | G2165 | - | | | |
| CITY STAR 125 | 125 | 11 | | FD187 | G1050 | 1 | | | | | FD200 | G1050 | | | | |

| BRAND & MODEL • MARCA Y MODELO<br>MARCA E MODELLO • MARQUE ET MODÉLE | C.C. | YEAR | | FRONT FD MF | FRONT COMPOUND RECOMMENDED | FRONT N° | FRONT DF | FRONT OE | FRONT UPGRADE 1 | FRONT UPGRADE 2 | REAR FD MF | REAR COMPOUND RECOMMENDED | REAR DF | REAR OE | REAR UPGRADE | KITS KG |
|---|---|---|---|---|---|---|---|---|---|---|---|---|---|---|---|---|
| CITY STAR 125 ACTIVE | 125 | 13 | | FD187 | G1050 | 1 | | | | | FD200 | G1050 | | | | |
| DJANGO ALLURE | 125 | 14 | | FD086 | G1054 | 1 | | | | | FD220 | G1050 | | | | |
| DJANGO SPORT | 125 | 14 | | FD086 | G1054 | 1 | | | | | FD220 | G1050 | | | | |
| ELISTAR EFI | 125 | 02 | | FD162 | G1054 | 1 | | | | | FD270 | G1050 | | | | |
| ELYSEO 125 | 125 | 98 | 00 | FD065 | G1050 | 1 | DF864 | W | | | MF002 | G2165 | - | | | |
| ELYSEO 125 | 125 | 01 | | FD065 | G1050 | 1 | DF864 | W | | | FD065 | G1050 | DF864 | W | | |
| GEO 125 RS | 125 | 10 | | FD162 | G1054 | 1 | | | | | FD270 | G1050 | | | | |
| GEO SV | 125 | 92 | | FD147 | G1050 | 1 | DF649 | W | | | MF002 | G2165 | - | | | |
| GEOPOLIS 125 (AJP) | 125 | 06 | | FD162 | G1054 | 1 | | | | | FD270 | G1050 | | | | |
| GEOPOLIS 125 (NISSIN) | 125 | 06 | | FD187 | G1050 | 1 | | | | | FD187 | G1050 | | | | |
| JET FORCE | 125 | 03 | | FD162 | G1054 | 1 | | | | | FD270 | G1050 | | | | |
| LOOXOR | 125 | 01 | 04 | FD065 | G1050 | 1 | | | | | FD065 | G1050 | DF649 | W | | |
| LOOXOR | 125 | 05 | | FD245 | G1050 | 1 | | | | | FD270 | G1050 | | | | |
| LUDIX 125 | 125 | 04 | | FD065 | G1050 | 1 | | | | | MF002 | G2165 | - | | | |
| LXR 125 | 125 | 10 | | FD162 | G1054 | 1 | | | | | FD399 | G1050 | | | | |
| NEW VIVACITY 125 | 125 | 10 | | FD187 | G1050 | 1 | | | | | MF | | - | | | |
| NEW VIVACITY 125 SIXTIES | 125 | 10 | | FD095 | G1050 | 1 | | | | | MF | | - | | | |
| SATELIS 125 | 125 | 10 | | FD162 | G1054 | 1 | | | | | FD270 | G1050 | | | | |
| SATELIS 125 K15 (AJP) | 125 | 06 | | FD162 | G1054 | 1 | | | | | FD270 | G1050 | | | | |
| SATELIS 125 K15 (NISSIN) | 125 | 07 | | FD187 | G1050 | 1 | | | | | FD270 | G1050 | | | | |
| SATELIS 125 K15 COMPRESOR (AJP) | 125 | 06 | | FD162 | G1054 | 1 | | | | | FD270 | G1050 | | | | |
| SATELIS 125 K15 COMPRESOR (NISSIN) | 125 | 07 | | FD187 | G1050 | 1 | | | | | FD270 | G1050 | | | | |
| SATELIS 125 RS | 125 | 13 | | FD187 | G1050 | 1 | | | | | FD200 | G1050 | | | | |
| SUM-UP | 125 | 08 | | FD095 | G1050 | 1 | | | | | MF451 | G2165 | - | | | |
| SV EXECUTIVE/GEO | 125 | 91 | 94 | FD147 | G1050 | 1 | DF649 | W | | | MF002 | G2165 | - | | | |
| SV EXECUTIVE/GEO | 125 | 95 | | FD144 | G1050 | 1 | DF649 | W | | | MF002 | G2165 | - | | | |
| TWEET 125 | 125 | 10 | | FD188 | G1050 | 1 | | | | | | | | | | |
| VOX CITY | 125 | 10 | | FD073 | G1050 | 1 | | | | | MF | | - | | | |
| XPS CT 125 | 125 | 06 | | FD065 | G1050 | 1 | | | | | FD065 | G1050 | | | | |
| E-SATELIS | EL | 11 | | FD187 | G1050 | 1 | | | | | FD187 | G1050 | | | | |
| E-VIVACITY | EL | 10 | | FD187 | G1050 | 1 | | | | | MF002 | G2165 | - | | | |
| **PIAGGIO** | | | | | | | | | | | | | | | | |
| 50 VESPINO F9 FAST RIDER | 50 | 93 | | FD152 | G1050 | 1 | | | | | MF | | - | | | |
| DIESIS | 50 | 03 | | FD065 | G1050 | 1 | | | | | MF301 | G2165 | - | | | |
| FLY 50 2T | 50 | 05 | | FD277 | G1050 | 1 | DF650 | W | RW | | MF | | - | | | |
| FLY 50 4T | 50 | 05 | | FD277 | G1050 | 1 | DF650 | W | RW | | MF | | - | | | |
| FREE | 50 | 94 | 95 | MF618 | G2165 | | - | | | | MF631 | G2165 | - | | | |
| FREE 50 | 50 | 96 | | FD152 | G1050 | 1 | | | | | MF631 | G2165 | - | | | |
| LIBERTY 50 | 50 | 97 | 99 | FD200 | G1050 | 1 | DF704 | W | FLW | | MF | | - | | | |
| LIBERTY 50 4T | 50 | 00 | 08 | FD200 | G1050 | 1 | DF704 | W | FLW | | MF | | - | | | |
| LIBERTY 50 4T | 50 | 09 | | FD277 | G1050 | 1 | | | | | MF | | - | | | |
| NRG | 50 | 94 | 98 | FD153 | G1050 | 1 | DF629 | W | RW | FLS | MF621 | G2165 | - | | | |
| NRG EXTREME AGUA | 50 | 99 | | FD153 | G1050 | 1 | DF737 | W | | | FD200 | G1050 | DF705 | W | | |
| NRG EXTREME AIRE | 50 | 99 | | FD153 | G1050 | 1 | DF737 | W | | | MF621 | G2165 | - | | | |
| NRG POWER DD | 50 | 05 | | FD094 | G1050 | 1 | DF704 | W | FLW | | FD200 | G1050 | DF705 | W | | |
| NRG POWER PURE JET | 50 | 05 | | FD094 | G1050 | 1 | DF704 | W | FLW | | FD200 | G1050 | DF705 | W | | |
| NRG=MC2 | 50 | 98 | 03 | FD153 | G1050 | 1 | DF629 | W | RW | FLS | FD200 | G1050 | DF705 | W | | |
| NRG=MC3 PURE JET | 50 | 04 | | FD094 | G1050 | 1 | DF704 | W | FLW | | FD200 | G1050 | DF705 | W | | |
| NTT | 50 | 95 | | FD153 | G1050 | 1 | DF629 | W | RW | FLS | MF621 | G2165 | - | | | |
| QUARTZ | 50 | 92 | | FD152 | G1050 | 1 | DF650 | W | RW | | MF621 | G2165 | - | | | |
| S 50 4T | 50 | 09 | | FD200 | G1050 | 1 | | | | | MF | | - | | | |
| SCATTO | 50 | 90 | | MF637 | G2165 | | - | | | | MF637 | G2165 | - | | | |
| SFERA | 50 | 90 | 95 | MF620 | G2165 | | - | | | | MF621 | G2165 | - | | | |
| SFERA | 50 | 96 | | FD197 | G1054 | 1 | DF650 | W | RW | | MF621 | G2165 | - | | | |
| STORM | 50 | 94 | | FD153 | G1050 | 1 | DF629 | W | RW | FLS | MF621 | G2165 | - | | | |
| TYPHOON | 50 | 94 | 95 | FD153 | G1050 | 1 | DF629 | W | RW | FLS | MF621 | G2165 | - | | | |
| TYPHOON | 50 | 96 | 98 | FD153 | G1050 | 1 | DF629 | W | RW | FLS | MF717 | G2165 | - | | | |
| TYPHOON | 50 | 11 | | FD277 | G1050 | 1 | DF737 | W | | | MF | | - | | | |
| TYPHOON-X | 50 | 99 | 10 | FD153 | G1050 | 1 | DF629 | W | RW | FLS | MF717 | G2165 | - | | | |
| VESPA 50 ET2 | 50 | 00 | | FD200 | G1050 | 1 | DF650 | W | RW | | MF636 | G2165 | - | | | |
| VESPA 50 ET4 | 50 | 01 | | FD200 | G1050 | 1 | DF650 | W | RW | | MF636 | G2165 | - | | | |
| VESPA 50 S 4V | 50 | 09 | | FD200 | G1050 | 1 | DF650 | W | RW | | MF636 | G2165 | - | | | |
| ZIP | 50 | 92 | 92 | MF617 | G2165 | | - | | | | MF621 | G2165 | - | | | |
| ZIP 4T | 50 | 00 | | FD200 | G1050 | 1 | DF705 | W | | | MF631 | G2165 | - | | | |
| ZIP CATALIZADA | 50 | 00 | | FD200 | G1050 | 1 | DF704 | W | FLW | | MF631 | G2165 | - | | | |
| ZIP FAST-RIDER | 50 | 93 | 95 | FD153 | G1050 | 1 | DF466 | W | | | MF631 | G2165 | - | | | |
| ZIP SP LC | 50 | 96 | 99 | FD200 | G1050 | 1 | DF650 | W | RW | | MF631 | G2165 | - | | | |
| SFERA 75 | 75 | 90 | | MF620 | G2165 | | - | | | | MF621 | G2165 | - | | | |
| TYPHOON | 80 | 95 | 95 | FD153 | G1050 | 1 | DF629 | W | RW | FLS | MF621 | G2165 | - | | | |
| TYPHOON | 80 | 96 | | FD153 | G1050 | 1 | DF629 | W | RW | FLS | MF717 | G2165 | - | | | |
| FLY 100 | 100 | 07 | | FD277 | G1050 | 1 | DF650 | W | RW | | MF717 | G2165 | - | | | |
| FREE 100 | 100 | 02 | | FD153 | G1050 | 1 | DF704 | W | FLW | | MF717 | G2165 | - | | | |
| ZIP 100 | 100 | 07 | | FD200 | G1050 | 1 | DF704 | W | FLW | | MF636 | G2165 | - | | | |

**OE:** Original equipment (original replacement disc) • **OE:** Equipo original (disco de remplazo del original) For other models years previous to 1990 visit **www.galferonline.es** • Para otros modelos anteriores al año 1990 visitar **www.galferonline.es**
For consult TÜV (ABE) type approvals visit **www.galfermoto.com --> DOWNALOAD --> TÜV CERTIFICATIONS** • Para consultar las homologaciones TÜV (ABE) visitar **www.galfermoto.com --> DESCARGAS --> CERTIFICACIONES TÜV**

| BRAND & MODEL • MARCA Y MODELO<br>MARCA E MODELLO • MARQUE ET MODÉLE | C.C. | YEAR | | FRONT FD MF | FRONT COMPOUND RECOMMENDED | FRONT N° | FRONT DF | FRONT OE | FRONT UPGRADE 1 | FRONT UPGRADE 2 | REAR FD MF | REAR COMPOUND RECOMMENDED | REAR DF | REAR OE | REAR UPGRADE | KITS KG |
|---|---|---|---|---|---|---|---|---|---|---|---|---|---|---|---|---|
| BEVERLY 125 | 125 | 10 | | FD277 | G1050 | 1 | | | | | FD277 | G1050 | DF666 | W | | |
| BEVERLY 125 4T (G) | 125 | 02 | | FD162 | G1054 | 1 | DF667 | W | | | FD162 | G1054 | DF667 | W | | |
| BEVERLY 125 4T (H) | 125 | 02 | | FD277 | G1050 | 1 | DF667 | W | | | FD277 | G1050 | DF667 | W | | |
| CARNABY 125 | 125 | 07 | | FD277 | G1050 | 1 | DF667 | W | | | FD277 | G1050 | DF667 | W | | |
| FLY 125 4T | 125 | 05 | | FD277 | G1050 | 1 | DF650 | W | RW | | MF717 | G2165 | - | | | |
| HEXAGON | 125 | 94 | 97 | FD153 | G1050 | 1 | | | | | MF636 | G2165 | - | | | |
| HEXAGON GTX 125 (G) | 125 | 00 | 00 | FD162 | G1054 | 1 | DF650 | W | RW | | FD263 | G1054 | DF650 | W | RW | |
| HEXAGON GTX 125 (H) | 125 | 00 | 00 | FD277 | G1050 | 1 | DF650 | W | RW | | FD263 | G1054 | DF650 | W | RW | |
| HEXAGON LX 125 (G) | 125 | 98 | 99 | FD162 | G1054 | 1 | DF650 | W | RW | | MF | | - | | | |
| HEXAGON LX 125 (H) | 125 | 98 | 99 | FD277 | G1050 | 1 | DF650 | W | RW | | MF | | - | | | |
| LIBERTY 4-T | 125 | 98 | 08 | FD200 | G1050 | 1 | DF704 | W | FLW | | MF | | - | | | |
| LIBERTY 4-T | 125 | 09 | | FD277 | G1050 | 1 | | | | | MF | | - | | | |
| MP 3 125 | 125 | 06 | 08 | FD200 | G1050 | 2 | DF714 | W | | | FD343 | G1050 | DF666 | W | | |
| MP 3 125 LT | 125 | 09 | | FD200 | G1050 | 2 | DF714 | W | | | FD334 | G1050 | DF666 | W | | |
| MP 3 125 YOURBAN | 125 | 11 | | FD200 | G1050 | 2 | DF714 | W | | | FD334 | G1050 | DF666 | W | | |
| MP 3 HYBRID | 125 | 09 | | FD200 | G1050 | 2 | DF714 | W | | | FD334 | G1050 | DF666 | W | | |
| SFERA 4T | 125 | 96 | | FD200 | G1050 | 1 | DF650 | W | RW | | MF636 | G2165 | - | | | |
| SKIPPER | 125 | 93 | 97 | FD152 | G1050 | 1 | DF650 | W | RW | | MF636 | G2165 | - | | | |
| SKIPPER LX (G) | 125 | 98 | 99 | FD162 | G1054 | 1 | DF737 | W | | | MF | | - | | | |
| SKIPPER LX (H) | 125 | 98 | 99 | FD277 | G1050 | 1 | DF737 | W | | | MF | | - | | | |
| SKR 125 ST 4T (G) | 125 | 00 | | FD162 | G1054 | 1 | DF737 | W | | | MF | | - | | | |
| SKR 125 ST 4T (H) | 125 | 00 | | FD277 | G1050 | 1 | DF737 | W | | | MF | | - | | | |
| SUPER HEXAGON GTX 125 (G) | 125 | 01 | | FD162 | G1054 | 1 | | | | | FD263 | G1054 | DF704 | W | FLW | |
| SUPER HEXAGON GTX 125 (H) | 125 | 01 | | FD277 | G1050 | 1 | | | | | FD263 | G1054 | DF704 | W | FLW | |
| TYPHOON | 125 | 95 | 95 | FD153 | G1050 | 1 | DF629 | W | RW | FLS | MF621 | G2165 | - | | | |
| TYPHOON | 125 | 96 | 10 | FD153 | G1050 | 1 | DF629 | W | RW | FLS | MF717 | G2165 | - | | | |
| TYPHOON 4T | 125 | | | FD277 | G1050 | 1 | DF737 | W | | | MF | | - | | | |
| VESPA 946 | 125 | 13 | | FD277 | G1050 | 1 | | | | | FD263 | G1054 | | | | |
| VESPA ET4 | 125 | 96 | | FD200 | G1050 | 1 | DF650 | W | RW | | MF636 | G2165 | - | | | |
| VESPA GRAN TURISMO (G) | 125 | 03 | | FD162 | G1054 | 1 | DF704 | W | FLW | | FD263 | G1054 | DF704 | W | FLW | |
| VESPA GRAN TURISMO (H) | 125 | 03 | | FD277 | G1050 | 1 | DF704 | W | FLW | | FD263 | G1054 | DF704 | W | FLW | |
| VESPA GTS 125 SUPER | 125 | 09 | | FD277 | G1050 | 1 | DF704 | W | FLW | | FD200 | G1050 | | | | |
| VESPA GTV 125 | 125 | 06 | | FD277 | G1050 | 1 | DF704 | W | FLW | | FD263 | G1054 | DF704 | W | FLW | |
| VESPA LX 125 | 125 | 09 | | FD277 | G1050 | 1 | DF704 | W | FLW | | FD200 | G1050 | | | | |
| VESPA LXV 125ie | 125 | 10 | | FD277 | G1050 | 1 | DF704 | W | FLW | | MF | | - | | | |
| VESPA PRIMAVERA | 125 | 15 | | FD277 | G1050 | 1 | DF704 | W | FLW | | MF | | - | | | |
| VESPA SPRINT | 125 | 15 | | FD277 | G1050 | 1 | DF704 | W | FLW | | MF | | - | | | |
| X 10 LEFT/IZQ | 125 | 12 | | FD277 | G1050 | 2 | | | | | | | | | | |
| X 10 RIGHT/DER | 125 | 12 | | FD334 | G1050 | 2 | | | | | FD343 | G1050 | | | | |
| X 7 | 125 | 08 | | FD277 | G1050 | 1 | | | | | FD334 | G1050 | | | | |
| X 8 | 125 | 04 | 05 | FD277 | G1050 | 1 | DF667 | W | | | FD220 | G1050 | DF666 | W | | |
| X 8 | 125 | 06 | | FD277 | G1050 | 1 | DF667 | W | | | FD343 | G1050 | DF666 | W | | |
| X 9 | 125 | 01 | | FD220 | G1050 | 2 | DF666 | W | | | FD220 | G1050 | DF666 | W | | |
| X 9 EVOLUTION LEFT/IZQ. | 125 | 04 | 05 | FD277 | G1050 | 2 | DF667 | W | | | | | | | | |
| X 9 EVOLUTION LEFT/IZQ. | 125 | 06 | | FD277 | G1050 | 2 | DF667 | W | | | | | | | | |
| X 9 EVOLUTION RIGHT/DER. | 125 | 04 | 05 | FD334 | G1050 | 2 | DF667 | W | | | FD220 | G1050 | DF666 | W | | |
| X 9 EVOLUTION RIGHT/DER. | 125 | 06 | | FD334 | G1050 | 2 | DF667 | W | | | FD343 | G1050 | DF666 | W | | |
| X EVO 125 | 125 | 08 | | FD277 | G1050 | 1 | DF667 | W | | | FD334 | G1050 | DF666 | W | | |
| ZIP 125 | 125 | 00 | | FD200 | G1050 | 1 | | | | | MF | | - | | | |
| **POCKETBIKE** | | | | | | | | | | | | | | | | |
| CALIPER POLINI | | | | FD158 | G1054 | 1 | | | | | | | | | | |
| **POLINI** | | | | | | | | | | | | | | | | |
| XP 4 STREET 50 | 50 | 08 | | FD224 | G1050 | 1 | | | | | FD224 | G1050 | | | | |
| XP 4T MINIMOTARD | 100 | 08 | | FD224 | G1050 | 1 | | | | | FD224 | G1050 | | | | |
| XP 4 STREET 125 | 125 | 08 | | FD224 | G1050 | 1 | | | | | FD224 | G1050 | | | | |
| **RENAULT** | | | | | | | | | | | | | | | | |
| CAMPUS | 50 | 02 | | FD153 | G1050 | 1 | DF649 | W | | | MF | | - | | | |
| SPC 50 | 50 | 02 | | FD153 | G1050 | 1 | | | | | MF | | - | | | |
| FULLTIME | 125 | 02 | | FD153 | G1050 | 1 | | | | | FD200 | G1050 | | | | |
| KOURANOS | 125 | 02 | | FD153 | G1050 | 1 | | | | | FD200 | G1050 | | | | |
| **RIEJU** | | | | | | | | | | | | | | | | |
| CROSSER CR1 | 50 | 96 | | FD071 | G1054 | 1 | DF649 | W | | | MF002 | G2165 | - | | | |
| DRAC AIR, DL | 50 | 94 | | FD065 | G1050 | 1 | | | | | MF | | - | | | |
| EVASION | 50 | 09 | | FD085 | G1050 | 1 | | | | | MF | | - | | | |
| F 10 JET LINE | 50 | 95 | | FD153 | G1050 | 1 | DF649 | W | | | MF002 | G2165 | - | | | |
| FIRST | 50 | 95 | | FD071 | G1054 | 1 | DF649 | W | | | MF002 | G2165 | - | | | |
| MRT 50 | 50 | 09 | | FD252 | G1050 | 1 | | | | | FD252 | G1050 | | | | |
| MRT PRO 50 | 50 | 09 | | FD220 | G1050 | 1 | DF759 | W | | | FD252 | G1050 | DF758 | W | | |
| MRT SM 50 | 50 | 09 | | FD252 | G1050 | 1 | | | | | FD252 | G1050 | | | | |
| MRT SM PRO 50 | 50 | 09 | | FD220 | G1050 | 1 | DF759 | W | | | FD252 | G1050 | DF758 | W | | |
| MRX 50 | 50 | 03 | 07 | FD162 | G1054 | 1 | DF674 | W | FLW | | FD065 | G1050 | DF675 | W | | |
| MRX 50 PRO | 50 | 08 | | FD220 | G1050 | 1 | DF759 | W | | | FD065 | G1050 | DF758 | W | | |
| PACIFIC | 50 | 07 | | FD095 | G1050 | 1 | | | | | MF | | - | | | |

| BRAND & MODEL • MARCA Y MODELO<br>MARCA E MODELLO • MARQUE ET MODÉLE | C.C. | YEAR | | FRONT FD MF | FRONT COMPOUND RECOMMENDED | FRONT N° | FRONT DF | FRONT OE | FRONT UPGRADE 1 | FRONT UPGRADE 2 | REAR FD MF | REAR COMPOUND RECOMMENDED | REAR DF | REAR OE | REAR UPGRADE | KITS KG |
|---|---|---|---|---|---|---|---|---|---|---|---|---|---|---|---|---|
| RR 50 CASTROL | 50 | 99 | | FD133 | G1050 | 1 | DF674 | W | FLW | | FD065 | G1050 | DF675 | W | | |
| RR 50 GV | 50 | 96 | 98 | FD065 | G1050 | 1 | | | | | FD065 | G1050 | | | | |
| RR DL | 50 | 94 | 95 | FD065 | G1050 | 1 | | | | | MF | | - | | | |
| RR SPIKE | 50 | 99 | | FD065 | G1050 | 1 | | | | | FD065 | G1050 | | | | |
| RS-1 AGUA | 50 | 94 | 95 | FD065 | G1050 | 1 | | | | | MF | | - | | | |
| RS-1 EVOLUTION | 50 | 98 | 02 | FD065 | G1050 | 1 | | | | | FD065 | G1050 | | | | |
| RS-2 | 50 | 06 | | FD298 | G1050 | 1 | | | | | FD094 | G1050 | | | | |
| RS-2 MATRIX | 50 | 03 | 05 | FD297 | G1050 | 1 | DF683 | W | | | FD270 | G1050 | DF684 | W | | |
| RS-2 NKD | 50 | 04 | 05 | FD297 | G1050 | 1 | DF683 | W | | | FD270 | G1050 | DF684 | W | | |
| RS-2 NKD | 50 | 06 | | FD297 | G1050 | 1 | | | | | FD270 | G1050 | | | | |
| RS-3 | 50 | 11 | | FD297 | G1050 | 1 | | | | | FD252 | G1050 | | | | |
| SMX | 50 | 02 | | FD065 | G1050 | 1 | DF674 | W | FLW | | FD065 | G1050 | DF675 | W | | |
| SPIKE X 50 | 50 | 06 | | FD065 | G1050 | 1 | | | | | FD065 | G1050 | | | | |
| TANGO 50 | 50 | 07 | 08 | FD220 | G1050 | 1 | DF674 | W | FLW | | FD065 | G1050 | DF675 | W | | |
| TANGO 50 | 50 | 09 | | FD252 | G1050 | 1 | DF674 | W | FLW | | FD065 | G1050 | DF675 | W | | |
| TANGOO 50 | 50 | 08 | | FD220 | G1050 | 1 | DF674 | W | FLW | | FD065 | G1050 | DF675 | W | | |
| TOREO | 50 | 08 | | FD095 | G1050 | 1 | | | | | MF | | - | | | |
| WINDY | 50 | 94 | | FD065 | G1050 | 1 | | | | | MF630 | G2165 | - | | | |
| RST 80 | 80 | 90 | | FD071 | G1054 | 1 | | | | | FD065 | G1050 | | | | |
| MARATHON PRO 125 COMPETICION | 125 | 11 | | FD409 | G1054 | 1 | | | | | FD456 | G1054 | | | | |
| MARATHON PRO 125 SM | 125 | 09 | | FD220 | G1050 | 1 | | | | | FD252 | G1050 | | | | |
| MXR 125 4T | 125 | 03 | | FD133 | G1050 | 1 | DF674 | W | FLW | | FD065 | G1050 | DF675 | W | | |
| NKD 125 | 125 | 06 | | FD297 | G1050 | 1 | | | | | FD270 | G1050 | | | | |
| PACIFIC | 125 | 07 | | FD095 | G1050 | 1 | | | | | MF | | - | | | |
| RS-2 | 125 | 06 | | FD298 | G1050 | 1 | | | | | FD094 | G1050 | | | | |
| RS-2 NKD | 125 | 06 | | FD298 | G1050 | 1 | | | | | FD094 | G1050 | | | | |
| RS-3 | 125 | 10 | 12 | FD341 | G1050 | 1 | | | | | FD252 | G1050 | | | | |
| RS-3 | 125 | 13 | | FD341 | G1050 | 1 | | | | | FD075 | G1050 | | | | |
| RS-3 NKD | 125 | 13 | | FD341 | G1050 | 1 | | | | | FD075 | G1050 | | | | |
| SMX 125 | 125 | 08 | | FD220 | G1050 | 1 | | | | | FD065 | G1050 | | | | |
| SMX 125 4T | 125 | 03 | 07 | FD133 | G1050 | 1 | DF674 | W | FLW | | FD065 | G1050 | DF675 | W | | |
| TANGO 125 | 125 | 06 | 10 | FD220 | G1050 | 1 | DF674 | W | FLW | | FD065 | G1050 | DF675 | W | | |
| TANGO 125 | 125 | 11 | | FD409 | G1054 | 1 | | | | | FD065 | G1050 | | | | |
| TANGO 125 PRO | 125 | 07 | | FD220 | G1050 | 1 | DF677 | W | FLW | FLS | FD065 | G1050 | DF675 | W | | |
| **ROXON** | | | | | | | | | | | | | | | | |
| DUEL SM | 50 | 06 | | FD065 | G1050 | 1 | | | | | FD065 | G1050 | | | | |
| DUEL TT | 50 | 06 | | FD065 | G1050 | 1 | | | | | FD065 | G1050 | | | | |
| **SACHS** | | | | | | | | | | | | | | | | |
| 49 ER 12º | 50 | 08 | | FD175 | G1050 | 1 | | | | | MF | | - | | | |
| BEE 50 | 50 | 08 | | FD079 | G1050 | 1 | | | | | MF | | - | | | |
| MAD ASS 50 | 50 | 05 | | FD133 | G1050 | 1 | | | | | | | | | | |
| SPEEDFORCE 50 | 50 | 08 | | FD175 | G1050 | 1 | | | | | MF | | - | | | |
| SPEEDJET 50 | 50 | 08 | | FD175 | G1050 | 1 | | | | | MF | | - | | | |
| SX-1 50 | 50 | 08 | | FD175 | G1050 | 1 | | | | | MF | | - | | | |
| BEE 125 | 125 | 08 | | FD079 | G1050 | 1 | | | | | MF | | - | | | |
| MAD ASS 125 | 125 | 05 | | FD133 | G1050 | 1 | | | | | FD095 | G1050 | | | | |
| X ROAD 125 | 125 | 04 | | FD068 | G1050 | 1 | | | | | FD135 | G1050 | | | | |
| **SANYANG** | | | | | | | | | | | | | | | | |
| DUKE 125 | 125 | 94 | | FD188 | G1050 | 1 | | | | | MF | | - | | | |
| **SCARABEO** | | | | | | | | | | | | | | | | |
| 50 2T | 50 | 14 | | FD135 | G1050 | 1 | DF612 | W | | | MF630 | G2165 | - | | | |
| 50 4T | 50 | 14 | | FD135 | G1050 | 1 | DF612 | W | | | MF630 | G2165 | - | | | |
| 100 4T | 100 | 14 | | FD135 | G1050 | 1 | DF612 | W | | | MF630 | G2165 | - | | | |
| 125 ie | 125 | 15 | | FD245 | G1050 | 1 | DF671 | W | FLW | | FD228 | G1050 | DF612 | W | | |
| **SHERCO** | | | | | | | | | | | | | | | | |
| 50 IPONE LIMITED | 50 | 05 | | FD133 | G1050 | 1 | | | | | FD065 | G1050 | | | | |
| CITYCORP 125 | 125 | 03 | | FD133 | G1050 | 1 | | | | | FD065 | G1050 | | | | |
| CITYCORP 125 SM | 125 | 03 | | FD133 | G1050 | 1 | | | | | FD065 | G1050 | | | | |
| SM 1.25 F | 125 | 10 | | FD162 | G1054 | 1 | | | | | FD270 | G1050 | | | | |
| **SIAMOTO** | | | | | | | | | | | | | | | | |
| BIRDIE | 50 | 99 | | FD094 | G1050 | 1 | DF466 | W | | | MF | | - | | | |
| CAPRI | 50 | 99 | | FD065 | G1050 | 1 | | | | | FD065 | G1050 | | | | |
| FALKON | 50 | 99 | | FD065 | G1050 | 1 | | | | | FD065 | G1050 | | | | |
| MAT | 50 | 99 | | FD136 | G1050 | 1 | DF466 | W | | | MF | | - | | | |
| SCROSS | 50 | 99 | | FD084 | G1050 | 1 | | | | | MF | | - | | | |
| TOP RACING | 50 | 99 | | FD094 | G1050 | 1 | DF037 | W | RW | FLS | MF | | - | | | |
| MAT | 100 | 99 | | FD094 | G1050 | 1 | DF037 | W | RW | FLS | MF | | - | | | |
| TOP RACING | 100 | 99 | | FD094 | G1050 | 1 | DF037 | W | RW | FLS | MF | | - | | | |
| CAPRI | 125 | 99 | | FD065 | G1050 | 1 | | | | | FD065 | G1050 | | | | |
| FALKON | 125 | 99 | | FD065 | G1050 | 1 | | | | | FD065 | G1050 | | | | |
| **SIMSON** | | | | | | | | | | | | | | | | |
| 50 SR XCE | 50 | 94 | | FD071 | G1054 | 1 | | | | | MF | | - | | | |
| 53 S OR, B, N | 53 | 94 | | FD071 | G1054 | 1 | | | | | MF | | - | | | |



**OE:** Original equipment (original replacement disc) • **OE:** Equipo original (disco de remplazo del original) For other models years previous to 1990 visit **www.galferonline.es** • Para otros modelos anteriores al año 1990 visitar **www.galferonline.es**
For consult TÜV (ABE) type approvals visit **www.galfermoto.com --> DOWNALOAD --> TÜV CERTIFICATIONS** • Para consultar las homologaciones TÜV (ABE) visitar **www.galfermoto.com --> DESCARGAS --> CERTIFICACIONES TÜV**

| BRAND & MODEL • MARCA Y MODELO<br>MARCA E MODELLO • MARQUE ET MODÉLE | C.C. | YEAR | | FRONT FD MF | FRONT COMPOUND RECOMMENDED | FRONT N° | FRONT DF | FRONT OE | FRONT UPGRADE 1 | FRONT UPGRADE 2 | REAR FD MF | REAR COMPOUND RECOMMENDED | REAR DF | REAR OE | REAR UPGRADE | KITS KG |
|---|---|---|---|---|---|---|---|---|---|---|---|---|---|---|---|---|
| 80 XC, XCE | 80 | 94 | | FD071 | G1054 | 1 | | | | | MF | | - | | | |
| ALL MODELS | 80 | 95 | | FD071 | G1054 | 1 | | | | | MF | | - | | | |
| 83 S OR, B | 83 | 94 | | FD071 | G1054 | 1 | | | | | MF | | - | | | |
| **SUMCO** | | | | | | | | | | | | | | | | |
| DINGO DG 110 | 110 | 06 | | FD094 | G1050 | 1 | | | | | MF | | - | | | |
| 125 KR | 125 | 05 | | FD162 | G1054 | 1 | | | | | FD065 | G1050 | | | | |
| 125 ST | 125 | 05 | | FD266 | G1050 | 1 | | | | | MF | | - | | | |
| KIRA KR 125 SM | 125 | 06 | | FD162 | G1054 | 1 | | | | | FD065 | G1050 | | | | |
| KIRA KR 125 TR | 125 | 06 | | FD162 | G1054 | 1 | | | | | FD065 | G1050 | | | | |
| MS 125 | 125 | 06 | | FD169 | G1050 | 1 | | | | | FD214 | G1050 | | | | |
| **SUZUKI** | | | | | | | | | | | | | | | | |
| ADDRESS | 50 | 92 | 94 | MF301 | G2165 | | - | | | | MF301 | G2165 | - | | | |
| ADDRESS | 50 | 95 | | FD153 | G1050 | 1 | DF308 | | | | MF301 | G2165 | - | | | |
| AH 50 ADDRESS | 50 | 94 | | FD094 | G1050 | 1 | DF308 | | | | MF301 | G2165 | - | | | |
| AJ ZZ SEPIA | 50 | 93 | | FD094 | G1050 | 1 | | | | | MF301 | G2165 | - | | | |
| AP 50 | 50 | 94 | | FD153 | G1050 | 1 | DF308 | | | | MF301 | G2165 | - | | | |
| DR 50 LC | 50 | 94 | | FD065 | G1050 | 1 | | | | | MF608 | G2165 | - | | | |
| ESTILLETE UF 50 | 50 | 00 | | FD153 | G1050 | 1 | | | | | MF | | - | | | |
| KATANA 50 | 50 | 97 | 98 | FD153 | G1050 | 1 | DF308 | | | | MF301 | G2165 | - | | | |
| KATANA 50 DD | 50 | 99 | | FD153 | G1050 | 1 | DF308 | | | | FD065 | G1050 | | | | |
| R7 ADDRESS 50 | 50 | 96 | | FD153 | G1050 | 1 | DF308 | | | | MF301 | G2165 | - | | | |
| RF 50 | 50 | 95 | | FD153 | G1050 | 1 | DF308 | | | | MF301 | G2165 | - | | | |
| RMX 50 | 50 | 96 | | FD065 | G1050 | 1 | | | | | FD065 | G1050 | | | | |
| SMX 50 | 50 | 00 | | FD065 | G1050 | 1 | | | | | FD065 | G1050 | | | | |
| TR 50 STREET MAGIC | 50 | 98 | | FD177 | G1050 | 1 | DF308 | | | | MF641 | G2165 | - | | | |
| ZILLION 50 | 50 | 99 | | FD065 | G1050 | 1 | DF308 | | | | MF301 | G2165 | - | | | |
| ZZ 50 | 50 | 94 | | FD094 | G1050 | 1 | | | | | MF301 | G2165 | - | | | |
| AH 75 | 75 | 92 | | MF302 | G2165 | | - | | | | MF302 | G2165 | - | | | |
| AH 80 ADDRESS | 80 | 92 | | FD094 | G1050 | 1 | | | | | MF301 | G2165 | - | | | |
| CP ADRRESS | 80 | 92 | | FD094 | G1050 | 1 | | | | | MF301 | G2165 | - | | | |
| DR 80 BIG | 80 | 91 | | FD090 | G1054 | 1 | | | | | FD114 | G1054 | | | | |
| ADDRESS | 100 | 95 | | FD153 | G1050 | 1 | | | | | MF641 | G2165 | - | | | |
| AH 100 ADDRESS | 100 | 94 | 94 | FD094 | G1050 | 1 | | | | | MF641 | G2165 | - | | | |
| ADDRESS 110 | 110 | 15 | | FD094 | G1050 | 1 | | | | | MF | | - | | | |
| HOKUTO UG 110 | 110 | 00 | | FD177 | G1050 | 1 | | | | | MF641 | G2165 | - | | | |
| ADDRESS 125 | 125 | 09 | | FD117 | G1050 | 1 | | | | | MF | | - | | | |
| AN VECSTAR | 125 | 95 | | FD177 | G1050 | 1 | | | | | MF301 | G2165 | - | | | |
| DR 125 S | 125 | 93 | 97 | FD076 | G1054 | 1 | | | | | MF151 | G2165 | - | | | |
| DR 125 SE | 125 | 94 | | FD076 | G1054 | 1 | | | | | MF151 | G2165 | - | | | |
| DR 125 SM | 125 | 08 | | FD164 | G1054 | 1 | | | | | FD093 | G1054 | | | | |
| DR-Z 125 L | 125 | 03 | | FD177 | G1050 | 1 | | | | | MF | | - | | | |
| EN 125 | 125 | 05 | | FD086 | G1054 | 1 | | | | | MF151 | G2165 | - | | | |
| EPICURO 125 | 125 | 99 | | FD177 | G1050 | 1 | | | | | MF | | - | | | |
| GN 125 | 125 | 93 | | FD075 | G1050 | 1 | | | | | MF151 | G2165 | - | | | |
| GZ 125 MARAUDER | 125 | 98 | | FD209 | G1050 | 1 | | | | | MF | | - | | | |
| RG 125 F | 125 | 93 | 97 | FD107 | G1054 | 1 | DF321 | CW | CRW | | FD120 | G1054 | DF312 | W | | |
| RGV 125 AIR COOLED | 125 | 98 | | FD075 | G1050 | 1 | | | | | MF | | - | | | |
| RGV 125 WATER COOLED | 125 | 98 | | FD117 | G1050 | 1 | | | | | MF | | - | | | |
| RV 125 VAN VAN | 125 | 03 | | FD179 | G1054 | 1 | | | | | MF | | - | | | |
| SHOGUN R | 125 | 05 | | FD145 | G1050 | 1 | | | | | MF | | - | | | |
| SIXTEEN | 125 | 08 | | FD344 | G1050 | 1 | DF365 | W | | | FD315 | G1050 | DF365 | W | | |
| TS 125 R | 125 | 90 | | FD086 | G1054 | 1 | | | | | FD114 | G1054 | | | | |
| TU 125 | 125 | 00 | | FD209 | G1050 | 1 | | | | | MF151 | G2165 | - | | | |
| UE 125 | 125 | 01 | | FD094 | G1050 | 1 | | | | | MF | | - | | | |
| UH 125 BURGMAN | 125 | 02 | 06 | FD138 | G1050 | 1 | DF318 | W | | | FD220 | G1050 | DF319 | W | | |
| UH 125 BURGMAN | 125 | 07 | 13 | FD344 | G1050 | 1 | DF364 | W | | | FD315 | G1050 | DF364 | W | | |
| UH 125 BURGMAN | 125 | 14 | | FD117 | G1050 | 1 | DF364 | W | | | FD315 | G1050 | DF364 | W | | |
| UH 125 BURGMAN ABS | 125 | 14 | | FD117 | G1050 | 1 | DF364 | W | | | FD315 | G1050 | DF364 | W | | |
| UH 125 BURGMAN R | 125 | 11 | | FD344 | G1050 | 1 | DF364 | W | | | FD315 | G1050 | DF364 | W | | |
| VL 125 MARAUDER | 125 | 00 | | FD209 | G1050 | 1 | | | | | MF | | - | | | |
| **SUZUKI INDONESIA** | | | | | | | | | | | | | | | | |
| LETS 110 | 110 | 12 | | FD177 | G1050 | 1 | | | | | MF | | - | | | |
| NEX 110 | 110 | 11 | | FD177 | G1050 | 1 | | | | | MF | | - | | | |
| NEX FI 110 | 110 | 11 | | FD177 | G1050 | 1 | | | | | MF | | - | | | |
| SMASH 110 | 110 | 10 | | FD117 | G1050 | 1 | | | | | MF | | - | | | |
| TITAN 115 R | 115 | 11 | | FD362 | G1054 | 1 | | | | | MF | | - | | | |
| TITAN 115 SR | 115 | 11 | | FD362 | G1054 | 1 | | | | | MF | | - | | | |
| ARASHI 125 | 125 | 10 | | FD117 | G1050 | 1 | | | | | MF | | - | | | |
| SHOGUN 125 | 125 | 09 | | FD117 | G1050 | 1 | | | | | MF | | - | | | |
| SHOGUN AXELO 125 | 125 | 12 | | | | 1 | | | | | FD259 | G1050 | | | | |
| SHOGUN AXELO R 125 | 125 | 12 | | | | 1 | | | | | FD259 | G1050 | | | | |
| SHOGUN AXELO S 125 | 125 | 12 | | | | 1 | | | | | FD259 | G1050 | | | | |
| SHOGUN AXELO SE 125 | 125 | 12 | | | | 1 | | | | | FD259 | G1050 | | | | |

| BRAND & MODEL • MARCA Y MODELO<br>MARCA E MODELLO • MARQUE ET MODÉLE | C.C. | YEAR | | FRONT FD MF | FRONT COMPOUND RECOMMENDED | FRONT N° | FRONT DF | FRONT OE | FRONT UPGRADE 1 | FRONT UPGRADE 2 | REAR FD MF | REAR COMPOUND RECOMMENDED | REAR DF | REAR OE | REAR UPGRADE | KITS KG |
|---|---|---|---|---|---|---|---|---|---|---|---|---|---|---|---|---|
| SHOGUN FD 125 | 125 | 09 | | FD117 | G1050 | 1 | | | | | FD259 | G1050 | | | | |
| SHOGUN FI 125 | 125 | 09 | | FD117 | G1050 | 1 | | | | | FD259 | G1050 | | | | |
| SHOGUN RR 125 | 125 | 09 | | FD117 | G1050 | 1 | | | | | FD259 | G1050 | | | | |
| SHOGUN SP125 | 125 | 09 | | FD117 | G1050 | 1 | | | | | FD259 | G1050 | | | | |
| SKYDRIVE DYNAMIC | 125 | 12 | | FD259 | G1050 | 1 | | | | | MF | | - | | | |
| SKYDRIVE SPECIAL EDITION | 125 | 12 | | FD259 | G1050 | 1 | | | | | MF | | - | | | |
| SKYWAVE 125 | 125 | 10 | | FD117 | G1050 | 1 | | | | | MF | | - | | | |
| SPIN 125 | 125 | 10 | | FD259 | G1050 | 1 | | | | | MF | | - | | | |
| THUNDER 125 | 125 | 10 | | FD086 | G1054 | 1 | | | | | MF | | - | | | |
| **SUZUKI MALASIA** | | | | | | | | | | | | | | | | |
| NEX 110 | 110 | 11 | | FD177 | G1050 | 1 | | | | | MF | | - | | | |
| SMASH REVO 110 | 110 | 10 | | FD117 | G1050 | 1 | | | | | MF | | - | | | |
| SMASH V 125 | 115 | 11 | | FD362 | G1054 | 1 | | | | | MF | | - | | | |
| SHOGUN AXELO 125 | 125 | 12 | | | | 1 | | | | | FD259 | G1050 | | | | |
| SHOGUN RR 125 | 125 | 09 | | FD117 | G1050 | 1 | | | | | FD259 | G1050 | | | | |
| SHOGUN SP125 | 125 | 09 | | FD117 | G1050 | 1 | | | | | FD259 | G1050 | | | | |
| SKYDRIVE | 125 | 12 | | FD259 | G1050 | 1 | | | | | MF | | - | | | |
| SKYDRIVE SPECIAL EDITION | 125 | 12 | | FD259 | G1050 | 1 | | | | | MF | | - | | | |
| **SYM** | | | | | | | | | | | | | | | | |
| CHA CHA | 50 | 99 | | FD149 | G1050 | 1 | | | | | MF | | - | | | |
| CINDERELLA | 50 | 99 | | FD113 | G1050 | 1 | | | | | MF | | - | | | |
| DD 50 | 50 | 04 | | FD113 | G1050 | 1 | | | | | MF | | - | | | |
| FIDDLE 50 | 50 | 08 | | FD188 | G1050 | 1 | | | | | MF | | - | | | |
| JET | 50 | 99 | 05 | FD188 | G1050 | 1 | | | | | MF | | - | | | |
| JET 4 | 50 | 10 | | FD188 | G1050 | 1 | | | | | MF | | - | | | |
| JET 4 R | 50 | 11 | | FD188 | G1050 | 1 | | | | | MF | | - | | | |
| JET BASI X | 50 | 07 | | FD188 | G1050 | 1 | | | | | MF | | - | | | |
| JET EURO X | 50 | 05 | | FD188 | G1050 | 1 | | | | | MF | | - | | | |
| JET SPORT X | 50 | 06 | | FD188 | G1050 | 1 | | | | | FD166 | G1050 | | | | |
| JUNGLE | 50 | 99 | | FD188 | G1050 | 1 | | | | | MF630 | G2165 | - | | | |
| MASK /LC | 50 | 00 | | FD188 | G1050 | 1 | | | | | MF630 | G2165 | - | | | |
| MIO 50 | 50 | 06 | | FD113 | G1050 | 1 | | | | | MF | | - | | | |
| SHARK 50 | 50 | 00 | | FD412 | G1054 | 1 | | | | | MF | | - | | | |
| SUPER FANCY | 50 | 99 | | FD149 | G1050 | 1 | | | | | MF | | - | | | |
| SYMPLY 50 | 50 | 07 | | FD188 | G1050 | 1 | | | | | MF | | - | | | |
| X PRO 50 | 50 | 13 | | FD145 | G1050 | 1 | | | | | MF002 | G2165 | - | | | |
| DD 100 | 100 | 04 | | FD113 | G1050 | 1 | | | | | MF | | - | | | |
| JET EURO X 100 | 100 | 05 | | FD188 | G1050 | 1 | | | | | MF | | - | | | |
| JET SPORT X 100 SR | 100 | 06 | | FD188 | G1050 | 1 | | | | | MF | | - | | | |
| MIO 100 | 100 | 06 | | FD113 | G1050 | 1 | | | | | MF | | - | | | |
| ATTILA | 125 | 99 | | FD188 | G1050 | 1 | | | | | MF | | - | | | |
| B9A 125 | 125 | 10 | | FD399 | G1050 | 1 | | | | | MF | | - | | | |
| CEVALO 125 | 125 | 10 | | FD399 | G1050 | 1 | | | | | MF | | - | | | |
| CITYCOM 125 | 125 | 09 | | FD188 | G1050 | 1 | | | | | FD399 | G1050 | | | | |
| EURO MX | 125 | 02 | | FD412 | G1054 | 1 | | | | | MF | | - | | | |
| EURO MX DD | 125 | 06 | | FD412 | G1054 | 1 | | | | | MF | | - | | | |
| FIDDLE 125 | 125 | 08 | | FD188 | G1050 | 1 | | | | | MF | | - | | | |
| GTS 125 | 125 | 07 | | FD399 | G1050 | 1 | | | | | FD399 | G1050 | | | | |
| HD 125 EVO | 125 | 06 | | FD188 | G1050 | 1 | | | | | FD399 | G1050 | | | | |
| HD 2 125 CBS | 125 | 15 | | FD188 | G1050 | 1 | | | | | FD399 | G1050 | | | | |
| HUSKY | 125 | 99 | | FD412 | G1054 | 1 | | | | | MF641 | G2165 | - | | | |
| JET 4 | 125 | 10 | | FD188 | G1050 | 1 | | | | | MF | | - | | | |
| JOYRIDE | 125 | 01 | | FD412 | G1054 | 1 | | | | | FD261 | G1050 | | | | |
| MEGALO | 125 | 02 | | FD188 | G1050 | 1 | | | | | MF | | - | | | |
| NEW DUKE | 125 | 02 | | FD188 | G1050 | 1 | | | | | MF | | - | | | |
| RS 125 | 125 | 04 | | FD412 | G1054 | 1 | | | | | FD145 | G1050 | | | | |
| SB 125 WOLF | 125 | 11 | | FD399 | G1050 | 1 | | | | | FD336 | G1054 | | | | |
| SHARK 125 | 125 | 99 | | FD412 | G1054 | 1 | | | | | MF | | - | | | |
| SUPER DUKE | 125 | 99 | | FD188 | G1050 | 1 | | | | | MF641 | G2165 | - | | | |
| SYMPHONY 125 | 125 | 09 | | FD188 | G1050 | 1 | | | | | MF | | - | | | |
| SYMPHONY 125 S | 125 | 10 | | FD188 | G1050 | 1 | | | | | FD200 | G1050 | | | | |
| SYMPHONY 125 SR | 125 | 10 | | FD188 | G1050 | 1 | | | | | FD200 | G1050 | | | | |
| SYMPLY 125 | 125 | 07 | | FD188 | G1050 | 1 | | | | | MF | | - | | | |
| VOYAGER 125 | 125 | 05 | | FD092 | G1054 | 1 | | | | | FD092 | G1054 | | | | |
| VS 125 | 125 | 06 | | FD412 | G1054 | 1 | | | | | MF | | - | | | |
| WOLF LEGEND | 125 | 02 | | FD073 | G1050 | 1 | | | | | MF | | - | | | |
| WOLF SB 125 Ni | 125 | 15 | | FD399 | G1050 | 1 | | | | | FD336 | G1054 | | | | |
| X PRO 125 | 125 | 13 | | FD145 | G1050 | 1 | | | | | MF002 | G2165 | - | | | |
| XS 125 K | 125 | 07 | | FD145 | G1050 | 1 | | | | | MF | | - | | | |
| EVIE | EL | 10 | | MF002 | G2165 | | - | | | | MF002 | G2165 | - | | | |
| SYMMETRY | EL | 11 | | MF002 | G2165 | | - | | | | MF002 | G2165 | - | | | |
| WOO | EL | 11 | | FD113 | G1050 | 1 | | | | | MF002 | G2165 | - | | | |



**OE:** Original equipment (original replacement disc) • **OE:** Equipo original (disco de remplazo del original) For other models years previous to 1990 visit **www.galferonline.es** • Para otros modelos anteriores al año 1990 visitar **www.galferonline.es**
For consult TÜV (ABE) type approvals visit **www.galfermoto.com --> DOWNALOAD --> TÜV CERTIFICATIONS** • Para consultar las homologaciones TÜV (ABE) visitar **www.galfermoto.com --> DESCARGAS --> CERTIFICACIONES TÜV**

| BRAND & MODEL • MARCA Y MODELO<br>MARCA E MODELLO • MARQUE ET MODÉLE | C.C. | YEAR | | FRONT FD MF | FRONT COMPOUND RECOMMENDED | FRONT N° | FRONT DF | FRONT OE | FRONT UPGRADE 1 | FRONT UPGRADE 2 | REAR FD MF | REAR COMPOUND RECOMMENDED | REAR DF | REAR OE | REAR UPGRADE | KITS KG |
|---|---|---|---|---|---|---|---|---|---|---|---|---|---|---|---|---|
| **T-RACE** | | | | | | | | | | | | | | | | |
| T-RACE C | EL | 15 | | FD138 | G1050 | 1 | | | | | FD286 | G1396 | | | | |
| T-RACE DIABOLICA | EL | 15 | | FD138 | G1050 | 1 | | | | | FD291 | G1396 | | | | |
| T-RACE E | EL | 15 | | FD138 | G1050 | 1 | | | | | FD286 | G1396 | | | | |
| T-RACE R | EL | 15 | | FD138 | G1050 | 1 | | | | | FD286 | G1396 | | | | |
| **TGB** | | | | | | | | | | | | | | | | |
| 101 | 50 | 05 | | FD188 | G1050 | 1 | | | | | MF453 | G2165 | - | | | |
| 303 R | 50 | 99 | | FD094 | G1050 | 1 | | | | | MF641 | G2165 | - | | | |
| 409 F | 50 | 00 | 05 | FD094 | G1050 | 1 | | | | | MF641 | G2165 | - | | | |
| 409 F | 50 | 06 | | FD252 | G1050 | 1 | | | | | MF641 | G2165 | - | | | |
| 42 RACING 50 | 50 | 06 | | FD252 | G1050 | 1 | | | | | MF453 | G2165 | - | | | |
| AKROS 50 | 50 | 95 | 98 | FD094 | G1050 | 1 | | | | | MF | | - | | | |
| AKROS 50 | 50 | 99 | | FD188 | G1050 | 1 | | | | | MF | | - | | | |
| DELIVERY | 50 | 04 | | FD188 | G1050 | 1 | | | | | MF | | - | | | |
| ERGON | 50 | 94 | | FD094 | G1050 | 1 | | | | | MF | | - | | | |
| PLATFORM 50 | 50 | 06 | | FD188 | G1050 | 1 | | | | | MF | | - | | | |
| R 50 X | 50 | 06 | | FD252 | G1050 | 1 | | | | | MF | | - | | | |
| SUNSET 50 | 50 | 07 | | FD094 | G1050 | 1 | | | | | MF | | - | | | |
| 101 | 125 | 05 | | FD188 | G1050 | 1 | | | | | MF453 | G2165 | - | | | |
| 303 R | 125 | 99 | | FD094 | G1050 | 1 | | | | | MF | | - | | | |
| 409 F | 125 | 02 | 05 | FD094 | G1050 | 1 | | | | | MF | | - | | | |
| 409 F | 125 | 06 | | FD252 | G1050 | 1 | | | | | MF453 | G2165 | - | | | |
| 42 RACING 125 | 125 | 06 | | FD252 | G1050 | 1 | | | | | MF453 | G2165 | - | | | |
| PLATFORM 125 | 125 | 06 | | FD188 | G1050 | 1 | | | | | MF | | - | | | |
| X - MOTION 125 | 125 | 08 | | | | 1 | | | | | FD399 | G1050 | | | | |
| **TM** | | | | | | | | | | | | | | | | |
| SMM 125 | 125 | 14 | | FD262 | G1054 | 1 | | | | | FD012 | G1050 | DF829 | W | WLL | |
| SMR 125 | 125 | 14 | | FD262 | G1054 | 1 | | | | | FD286 | G1054 | DF829 | W | WLL | |
| **TOMOS** | | | | | | | | | | | | | | | | |
| 50 SE | 50 | 04 | | FD133 | G1050 | 1 | | | | | FD065 | G1050 | | | | |
| STEERMATE | 50 | 04 | | FD065 | G1050 | 1 | | | | | MF | | - | | | |
| YOUNGSTR RACING | 50 | 04 | | FD065 | G1050 | 1 | DF037 | W | RW | FLS | MF | | - | | | |
| 125 SE | 125 | 04 | | FD133 | G1050 | 1 | | | | | FD065 | G1050 | | | | |
| 125 SM | 125 | 05 | | FD220 | G1050 | 1 | | | | | FD065 | G1050 | | | | |
| **UVM** | | | | | | | | | | | | | | | | |
| BINGO 50 | 50 | 99 | | FD136 | G1050 | 1 | DF466 | W | | | MF | | - | | | |
| BINGO 125 | 125 | 99 | | FD136 | G1050 | 1 | DF466 | W | | | MF | | - | | | |
| **VECTRIX** | | | | | | | | | | | | | | | | |
| VECTRIX ELECTRIC 3W | EL | 07 | | FD065 | G1050 | 2 | | | | | FD138 | G1050 | | | | |
| VECTRIX ELECTRICA | EL | 06 | | FD138 | G1050 | 1 | | | | | FD138 | G1050 | | | | |
| **VENTO** | | | | | | | | | | | | | | | | |
| TRITON r4 | 100 | 06 | | FD095 | G1050 | 1 | | | | | MF | | - | | | |
| WORKMAN | 110 | 06 | | FD073 | G1050 | 1 | | | | | MF | | - | | | |
| WORKMAN | 125 | 06 | | FD095 | G1050 | 1 | | | | | MF | | - | | | |
| **VILLA** | | | | | | | | | | | | | | | | |
| 50 AX | 50 | 93 | | FD136 | G1050 | 1 | DF466 | W | | | MF | | - | | | |
| 50 GZ | 50 | 93 | | FD153 | G1050 | 1 | DF466 | W | | | MF | | - | | | |
| **YAMAHA** | | | | | | | | | | | | | | | | |
| AEROX 50 | 50 | 97 | | FD171 | G1050 | 1 | DF037 | W | RW | FLS | FD206 | G1050 | DF037 | W | RW | |
| AEROX 50 NAKED | 50 | 13 | | FD171 | G1050 | 1 | DF037 | W | RW | FLS | FD206 | G1050 | DF037 | W | RW | |
| AXIS 50 (I) | 50 | 93 | | FD170 | G1050 | 1 | DF466 | W | | | MF630 | G2165 | - | | | |
| AXIS COSMO | 50 | 95 | | FD153 | G1050 | 1 | DF466 | W | | | MF630 | G2165 | - | | | |
| AXIS PLUS | 50 | 95 | | FD153 | G1050 | 1 | DF466 | W | | | MF630 | G2165 | - | | | |
| BELUGA 50 | 50 | 90 | | MF453 | G2165 | | - | | | | MF460 | G2165 | - | | | |
| BREEZE 50 | 50 | 95 | | FD153 | G1050 | 1 | DF466 | W | | | MF453 | G2165 | - | | | |
| BW'S 50 | 50 | 91 | 92 | MF453 | G2165 | | - | | | | MF453 | G2165 | - | | | |
| BW'S 50 R | 50 | 95 | 95 | FD170 | G1050 | 1 | DF473 | W | RW | WS | MF453 | G2165 | - | | | |
| BW'S BUMP | 50 | 96 | | FD171 | G1050 | 1 | DF473 | W | RW | WS | MF453 | G2165 | - | | | |
| BW'S NAKED | 50 | 06 | | FD153 | G1050 | 1 | DF473 | W | RW | WS | MF453 | G2165 | - | | | KG473 |
| BW'S NEXT GENERATION 50 | 50 | 96 | | FD153 | G1050 | 1 | DF473 | W | RW | WS | MF453 | G2165 | - | | | |
| BW'S SPY 50 | 50 | 95 | 95 | FD153 | G1050 | 1 | DF473 | W | RW | WS | MF453 | G2165 | - | | | |
| BW'S WHEEL12" | 50 | 06 | | FD153 | G1050 | 1 | DF473 | W | RW | WS | MF453 | G2165 | - | | | KG473 |
| CR 50 TARGET | 50 | 91 | | FD136 | G1050 | 1 | DF466 | W | | | MF458 | G2165 | - | | | |
| CR 50 Z | 50 | 92 | 93 | FD079 | G1050 | 1 | DF466 | W | | | MF458 | G2165 | - | | | |
| CR 50 Z | 50 | 94 | | FD136 | G1050 | 1 | DF466 | W | | | MF458 | G2165 | - | | | |
| CT 50 SUPER SPORT | 50 | 90 | | MF458 | G2165 | | - | | | | MF458 | G2165 | - | | | |
| DT 50 LCD | 50 | 96 | 03 | FD084 | G1050 | 1 | DF486 | W | | | MF453 | G2165 | - | | | |
| DT 50 LCD | 50 | 04 | 04 | FD162 | G1054 | 1 | | | | | FD065 | G1050 | | | | |
| DT 50 R | 50 | 94 | 95 | FD079 | G1050 | 1 | DF486 | W | | | MF453 | G2165 | - | | | |
| DT 50 R | 50 | 05 | | FD065 | G1050 | 1 | DF658 | W | | | FD270 | G1050 | DF698 | W | | |
| DT 50 SUPERMOTARD | 50 | 03 | 04 | FD084 | G1050 | 1 | | | | | FD075 | G1050 | | | | |
| DT 50 SUPERMOTARD | 50 | 05 | | FD162 | G1054 | 1 | DF674 | W | FLW | | FD065 | G1050 | DF698 | W | | |
| JOG | 50 | 92 | 93 | FD136 | G1050 | 1 | DF466 | W | | | MF630 | G2165 | - | | | |

| BRAND & MODEL • MARCA Y MODELO<br>MARCA E MODELLO • MARQUE ET MODÉLE | C.C. | YEAR | | FRONT FD MF | FRONT COMPOUND RECOMMENDED | FRONT N° | FRONT DF | FRONT OE | FRONT UPGRADE 1 | FRONT UPGRADE 2 | REAR FD MF | REAR COMPOUND RECOMMENDED | REAR DF | REAR OE | REAR UPGRADE | KITS KG |
|---|---|---|---|---|---|---|---|---|---|---|---|---|---|---|---|---|
| JOG R | 50 | 94 | 01 | FD136 | G1050 | 1 | DF466 | W | | | MF630 | G2165 | - | | | |
| JOG R | 50 | 02 | | FD171 | G1050 | 1 | DF629 | W | RW | FLS | MF | | - | | | |
| JOG RR LC | 50 | 02 | | FD171 | G1050 | 1 | DF629 | W | RW | FLS | MF | | - | | | |
| NEO´S | 50 | 97 | | FD171 | G1050 | 1 | DF629 | W | RW | FLS | MF458 | G2165 | - | | | |
| NEO´S 50 4T | 50 | 09 | | FD171 | G1050 | 1 | DF629 | W | RW | FLS | MF458 | G2165 | - | | | |
| RZ 50 | 50 | 02 | | FD214 | G1050 | 1 | | | | | MF | | - | | | |
| SLIDER | 50 | 99 | | FD206 | G1050 | 1 | DF037 | W | RW | FLS | MF453 | G2165 | - | | | |
| TARGET | 50 | 94 | | FD136 | G1050 | 1 | DF466 | W | | | MF458 | G2165 | - | | | |
| TT R 50 | 50 | 06 | | MF460 | G2165 | | - | | | | MF630 | G2165 | - | | | |
| TZR 50 RR | 50 | 97 | 02 | FD117 | G1050 | 1 | DF470 | W | | | FD079 | G1050 | DF487 | W | | |
| TZR 50 RR | 50 | 03 | | FD162 | G1054 | 1 | | | | | FD065 | G1050 | | | | |
| WHY YH 50 | 50 | 98 | | FD153 | G1050 | 1 | DF015 | W | | | MF453 | G2165 | - | | | |
| ZEST 50 | 50 | 93 | | FD170 | G1050 | 1 | DF466 | W | | | MF460 | G2165 | - | | | |
| BW'S 65 | 65 | 95 | | FD170 | G1050 | 1 | DF473 | W | RW | WS | MF453 | G2165 | - | | | |
| BELUGA 80 | 80 | 90 | | MF453 | G2165 | | - | | | | MF460 | G2165 | - | | | |
| DT 80 LC | 80 | 93 | | FD079 | G1050 | 1 | | | | | MF461 | G2165 | - | | | |
| TZR 80 RR | 80 | 92 | | FD117 | G1050 | 1 | DF470 | W | | | FD079 | G1050 | DF487 | W | | |
| ZEST 80 | 80 | 94 | | FD171 | G1050 | 1 | DF466 | W | | | MF460 | G2165 | - | | | |
| CR 90 TARGET | 90 | 91 | | FD136 | G1050 | 1 | DF466 | W | | | MF458 | G2165 | - | | | |
| JOG 90 | 90 | 90 | | FD136 | G1050 | 1 | DF466 | W | | | MF453 | G2165 | - | | | |
| TT R 90 | 90 | 00 | | MF460 | G2165 | | - | | | | MF630 | G2165 | - | | | |
| AEROX 100 | 100 | 00 | | FD153 | G1050 | 1 | DF037 | W | RW | FLS | FD206 | G1050 | DF037 | W | RW | |
| BW'S 100 | 100 | 00 | | FD153 | G1050 | 1 | DF473 | W | RW | WS | MF640 | G2165 | - | | | |
| NEO´S 100 | 100 | 00 | | FD171 | G1050 | 1 | DF629 | W | RW | FLS | MF640 | G2165 | - | | | |
| BELUGA 125 XC | 125 | 93 | | MF475 | G2165 | | - | | | | MF640 | G2165 | - | | | |
| BW'S 125 | 125 | 10 | | FD473 | G1054 | 1 | | | | | MF458 | G2165 | - | | | |
| CIGNUS 125 | 125 | 95 | 95 | MF640 | G2165 | | - | | | | MF458 | G2165 | - | | | |
| CIGNUS 125 / R | 125 | 96 | 02 | FD079 | G1050 | 1 | | | | | MF458 | G2165 | - | | | |
| CIGNUS 125 X | 125 | 03 | 06 | FD342 | G1050 | 1 | | | | | MF458 | G2165 | - | | | |
| CIGNUS 125 X i | 125 | 07 | | FD342 | G1050 | 1 | | | | | MF458 | G2165 | - | | | |
| D'ELIGHT | 125 | 14 | | FD393 | G1050 | 1 | | | | | MF | | - | | | |
| DT 125 | 125 | 99 | | FD079 | G1050 | 1 | | | | | FD079 | G1050 | | | | |
| DT 125 R | 125 | 05 | | FD079 | G1050 | 1 | DF457 | W | | | FD114 | G1054 | | | | |
| DT 125 X | 125 | 05 | | FD172 | G1054 | 1 | | | | | FD114 | G1054 | | | | |
| MAJESTY S | 125 | 15 | | FD355 | G1050 | 1 | | | | | | | | | | |
| MAXTER 125 | 125 | 01 | | FD138 | G1050 | 1 | | | | | FD220 | G1050 | | | | |
| MT 125 | 125 | 14 | | FD367 | G1054 | 1 | DF526 | W | | | FD336 | G1054 | DF527 | W | | |
| SP 125 MAGESTY | 125 | 98 | 00 | FD138 | G1050 | 1 | DF492 | W | | | MF640 | G2165 | - | | | |
| SP 125 MAGESTY | 125 | 01 | | FD138 | G1050 | 1 | DF492 | W | | | FD220 | G1050 | | | | |
| SP 125 MAGESTY (TAIWAN) | 125 | 99 | | FD140 | G1050 | 1 | DF502 | W | | | MF | | - | | | |
| SR 125 | 125 | 98 | | FD169 | G1050 | 1 | DF459 | W | | | MF458 | G2165 | - | | | |
| TDR 125 R | 125 | 91 | 92 | FD068 | G1050 | 1 | DF660 | CW | CRW | | FD069 | G1054 | DF451 | W | | |
| TDR 125 R | 125 | 93 | | FD169 | G1050 | 1 | DF660 | CW | CRW | | FD079 | G1050 | DF451 | W | | |
| TEO´S 125 | 125 | 00 | | FD153 | G1050 | 1 | DF492 | W | | | MF640 | G2165 | - | | | |
| TRICITY | 125 | 14 | | | | 2 | | | | | FD259 | G1050 | | | | |
| TT R 125 | 125 | 00 | | FD097 | G1050 | 1 | | | | | MF630 | G2165 | - | | | |
| TW 125 | 125 | 98 | | FD214 | G1050 | 1 | DF467 | W | | | MF | | - | | | |
| TZ 125 GP | 125 | 94 | | FD099 | G1054 | 1 | | | | | FD163 | G1054 | | | | |
| TZR 125 | 125 | 90 | 91 | FD057 | G1054 | 1 | DF660 | CW | CRW | | FD069 | G1054 | DF468 | W | | |
| TZR 125 | 125 | 92 | | FD099 | G1054 | 1 | DF660 | CW | CRW | | FD069 | G1054 | DF468 | W | | |
| TZR 125, MARLBORO RED ROCKET | 125 | 93 | | FD068 | G1050 | 1 | | | | | FD012 | G1050 | | | | |
| VINO 125 | 125 | 03 | | FD079 | G1050 | 1 | | | | | MF458 | G2165 | - | | | |
| VITY 125 | 125 | 08 | | FD393 | G1050 | 1 | | | | | MF | | - | | | |
| WR 125 X | 125 | 09 | | FD266 | G1050 | 1 | | | | | FD165 | G1054 | | | | |
| X - CITY | 125 | 09 | | FD140 | G1050 | 1 | | | | | FD220 | G1050 | DF524 | W | | |
| X - ENTER | 125 | 12 | | FD473 | G1054 | 1 | | | | | MF | | - | | | |
| X - MAX 125 | 125 | 06 | 09 | FD355 | G1050 | 1 | DF500 | W | | | FD220 | G1050 | DF524 | W | | |
| X - MAX 125 | 125 | 10 | | FD266 | G1050 | 1 | DF500 | W | | | FD214 | G1050 | DF524 | W | | KG500 |
| X - MAX 125 ABS | 125 | 10 | | FD266 | G1050 | 1 | DF500 | W | | | FD214 | G1050 | DF524 | W | | KG500 |
| XT 125 R | 125 | 05 | | FD270 | G1050 | 1 | | | | | FD270 | G1050 | | | | |
| XT 125 X | 125 | 05 | | FD162 | G1054 | 1 | DF674 | W | FLW | | FD270 | G1050 | | | | |
| XV 125 VIRAGO | 125 | 97 | 99 | FD169 | G1050 | 1 | DF459 | W | | | MF640 | G2165 | - | | | |
| XVS 125 DRAG STAR | 125 | 00 | | FD169 | G1050 | 1 | DF459 | W | | | MF640 | G2165 | - | | | |
| YBR 125 | 125 | 05 | 06 | FD079 | G1050 | 1 | | | | | MF640 | G2165 | - | | | |
| YBR 125 | 125 | 07 | | FD393 | G1050 | 1 | | | | | MF640 | G2165 | - | | | |
| YBR 125 CUSTOM | 125 | 08 | | FD393 | G1050 | 1 | | | | | MF640 | G2165 | - | | | |
| YZF 125 R | 125 | 08 | | FD138 | G1050 | 1 | DF526 | W | | | FD336 | G1054 | DF527 | W | | KG526 |
| **YAMAHA BRASIL** | | | | | | | | | | | | | | | | |
| NEO AT 115 | 115 | 05 | | FD214 | G1050 | 1 | | | | | MF | | - | | | |
| TT R 125 | 125 | 08 | | FD097 | G1050 | 1 | | | | | MF | | - | | | |
| XTZ 125 | 125 | 03 | | FD086 | G1054 | 1 | DF467 | W | | | MF | | - | | | |
| XTZ 125 X | 125 | 08 | | FD086 | G1054 | 1 | DF467 | W | | | MF | | - | | | |
| YBR 125 | 125 | 02 | 08 | FD086 | G1054 | 1 | | | | | MF | | - | | | |

**OE:** Original equipment (original replacement disc) • **OE:** Equipo original (disco de remplazo del original) For other models years previous to 1990 visit **www.galferonline.es** • Para otros modelos anteriores al año 1990 visitar **www.galferonline.es**
For consult TÜV (ABE) type approvals visit **www.galfermoto.com --> DOWNALOAD --> TÜV CERTIFICATIONS** • Para consultar las homologaciones TÜV (ABE) visitar **www.galfermoto.com --> DESCARGAS --> CERTIFICACIONES TÜV**

| BRAND & MODEL • MARCA Y MODELO<br>MARCA E MODELLO • MARQUE ET MODÉLE | C.C. | YEAR | | FRONT FD MF | FRONT COMPOUND RECOMMENDED | FRONT N° | FRONT DF | FRONT OE | FRONT UPGRADE 1 | FRONT UPGRADE 2 | REAR FD MF | REAR COMPOUND RECOMMENDED | REAR DF | REAR OE | REAR UPGRADE | KITS KG |
|---|---|---|---|---|---|---|---|---|---|---|---|---|---|---|---|---|
| YBR 125 | 125 | 09 | | FD393 | G1050 | 1 | | | | | MF | | - | | | |
| **YAMAHA INDONESIA** | | | | | | | | | | | | | | | | |
| JUPITER - T 105 SE | 105 | 01 | 04 | FD214 | G1050 | 1 | | | | | MF | | - | | | |
| VEGA R - T 105 SE | 105 | 04 | | FD214 | G1050 | 1 | | | | | MF | | - | | | |
| F1 - Z - V 110 E | 110 | 97 | | FD214 | G1050 | 1 | | | | | MF | | - | | | |
| F1 - ZR - V 110 | 110 | 97 | | FD214 | G1050 | 1 | | | | | MF | | - | | | |
| F1 - ZR - V 110 E | 110 | 97 | | FD214 | G1050 | 1 | | | | | MF | | - | | | |
| JUPITER Z - T 110 C | 110 | 05 | | FD214 | G1050 | 1 | | | | | MF | | - | | | |
| JUPITER Z - T 110 SE | 110 | 03 | | FD214 | G1050 | 1 | | | | | MF | | - | | | |
| JUPITER Z - T 110 SEC | 110 | 06 | | FD214 | G1050 | 1 | | | | | MF | | - | | | |
| VEGA R - T 110 LSE | 110 | 06 | | FD393 | G1050 | 1 | | | | | MF | | - | | | |
| JUPITER Z - T 115 SE | 115 | 10 | | FD393 | G1050 | 1 | | | | | MF | | - | | | |
| JUPITER Z - T 115 SEC | 115 | 10 | | FD393 | G1050 | 1 | | | | | MF | | - | | | |
| LEXAN - TK 115 C | 115 | 10 | | FD393 | G1050 | 1 | | | | | MF | | - | | | |
| MIO AL 115 C | 115 | 08 | | FD393 | G1050 | 1 | | | | | MF | | - | | | |
| MIO AL 115 J | 115 | 08 | | FD393 | G1050 | 1 | | | | | MF | | - | | | |
| MIO AL 115 S | 115 | 08 | | FD393 | G1050 | 1 | | | | | MF | | - | | | |
| MIO SOUL AL 115 C | 115 | 08 | | FD393 | G1050 | 1 | | | | | MF | | - | | | |
| MIO SPORTY AL 115 C | 115 | 09 | | FD393 | G1050 | 1 | | | | | MF | | - | | | |
| NOUVO AT 115 | 115 | 03 | | FD214 | G1050 | 1 | | | | | MF | | - | | | |
| NOUVO Z AT 115 C | 115 | 05 | | FD214 | G1050 | 1 | | | | | MF | | - | | | |
| VEGA ZR T 115 | 115 | 09 | | FD393 | G1050 | 1 | | | | | MF | | - | | | |
| VEGA ZR T 115 LE | 115 | 10 | | FD393 | G1050 | 1 | | | | | MF | | - | | | |
| VEGA ZR T 115 LSE | 115 | 10 | | FD393 | G1050 | 1 | | | | | MF | | - | | | |
| BYSON FZ 16 | 125 | 10 | | FD393 | G1050 | 1 | | | | | MF | | - | | | |
| XENON AL 125 | 125 | 10 | | FD393 | G1050 | 1 | | | | | MF | | - | | | |
| XENON AL 125 C | 125 | 11 | | FD393 | G1050 | 1 | | | | | MF | | - | | | |
| **YAMAHA MALASIA** | | | | | | | | | | | | | | | | |
| 125 ZR | 125 | 12 | | FD393 | G1050 | 1 | | | | | MF | | - | | | |
| **ZANELLA** | | | | | | | | | | | | | | | | |
| ARGENTO | 50 | 94 | | FD170 | G1050 | 1 | | | | | MF | | - | | | |
| PATAGONIA | 50 | 94 | | FD089 | G1054 | 1 | | | | | MF | | - | | | |
| RM3 | 50 | 94 | | FD084 | G1050 | 1 | | | | | MF | | - | | | |
| SUDAMERICA | 50 | 94 | | FD170 | G1050 | 1 | | | | | MF | | - | | | |
| **ZERO** | | | | | | | | | | | | | | | | |
| ZERO DS | EL | 10 | 12 | FD188 | G1050 | 1 | | | | | FD094 | G1050 | | | | |
| ZERO DS DUAL SPORT | EL | 13 | | FD164 | G1054 | 1 | | | | | FD286 | G1054 | | | | |
| ZERO FX STEALTHFIGHTER | EL | 13 | | FD164 | G1054 | 1 | | | | | FD286 | G1054 | | | | |
| ZERO MX | EL | 10 | 12 | FD188 | G1050 | 1 | | | | | FD094 | G1050 | | | | |
| ZERO MX | EL | 13 | | FD164 | G1054 | 1 | | | | | FD286 | G1054 | | | | |
| ZERO S | EL | 10 | 12 | FD188 | G1050 | 1 | | | | | FD094 | G1050 | | | | |
| ZERO S STREETFIGHTER | EL | 13 | | FD164 | G1054 | 1 | | | | | FD286 | G1054 | | | | |
| ZERO X | EL | 10 | | FD188 | G1050 | 1 | | | | | FD094 | G1050 | | | | |
| ZERO XU | EL | 10 | 12 | FD188 | G1050 | 1 | | | | | FD094 | G1050 | | | | |
| ZERO XU URBAN CROSSER | EL | 13 | | FD164 | G1054 | 1 | | | | | FD286 | G1054 | | | | |

## FD 012

mm: 39,8 x 56,3 | 7,0 | A | A

G1054 | G1050 | G1805 | G1371 |

| BRAND MARCA | MODEL MODELO | C.C. | YEAR | FRONT | REAR |
|---|---|---|---|---|---|
| **APRILIA** | | | | | |
| | AF 1 125 FUTURA | 125 | 90- | FD118 | FD012 |
| | EUROPA 125 | 125 | 91- | FD118 | FD012 |
| | RED ROSE 125 AE | 125 | 91- | FD133 | FD012 |
| **CAGIVA** | | | | | |
| | K3 50 | 50 | 92- | FD012 | FD048 |
| | W4-50 PRO ACTION | 50 | 92- | FD012 | FD048 |
| | MITO 125 EDDY | 125 | 93- | FD068 | FD012 |
| | MITO 125 SP 525 | 125 | 08- | FD068 | FD012 |
| | PLANET 125 | 125 | 98- | FD068 | FD012 |
| | RAPTOR 125 | 125 | 03- | FD068 | FD012 |
| | SUPER CITY 125 | 125 | 91- | FD119 | FD012 |
| **FANTIC** | | | | | |
| | CABALLERO 50 RS, RC | 50 | 92-93 | FD012 | FD048 |
| **GILERA-PIAGGIO** | | | | | |
| | 125 CRONO AE | 125 | 91- | FD118 | FD012 |
| | 125 CX, AE | 125 | 91- | FD118 | FD012 |
| | 125 FREESTYLE | 125 | 92- | FD118 | FD012 |
| | 125 GFR | 125 | 93-94 | FD118 | FD012 |
| | 125 RC | 125 | 90- | FD089 | FD012 |
| | 125 SPO2 | 125 | 90- | FD118 | FD012 |
| **HONDA** | | | | | |
| | CRM 125, R | 125 | 90- | FD074 | FD012 |
| **KEEWAY** | | | | | |
| | ARN 50 | 50 | 10- | FD012 | MF |
| | HACKER 125 | 125 | 08- | FD012 | MF |
| **LAVERDA** | | | | | |
| | 50 GAUCHO | 50 | 90- | FD012 | FD012 |
| | 125 NAVARRO | 125 | 90- | FD089 | FD012 |
| **MOTO GUZZI** | | | | | |
| | 125 BX | 125 | 92- | FD012 | FD012 |
| | 125 C | 125 | 92- | FD012 | MF |
| **P.G.O.** | | | | | |
| | STAR 125 | 125 | 95- | FD145 | FD012 |
| **TM** | | | | | |
| | SMM 125 | 125 | 14- | FD262 | FD012 |
| **YAMAHA** | | | | | |
| | TZR 125, MARLBORO RED ROCKET | 125 | 93- | FD068 | FD012 |

## FD 048

mm: 35,9 x 51,5 | 6,0 | A | A

G1054 | G1050 | G1805 |

| BRAND MARCA | MODEL MODELO | C.C. | YEAR | FRONT | REAR |
|---|---|---|---|---|---|
| **APRILIA** | | | | | |
| | AF1 50 FUTURA | 50 | 90- | FD084 | FD048 |
| | EUROPA 50 | 50 | 91- | FD084 | FD048 |
| | MX SUPERMOTARD | 50 | 02- | FD162 | FD048 |
| | RS 50 | 50 | 96-98 | FD153 | FD048 |
| | RS 50 EXTREMA | 50 | 94-95 | FD171 | FD048 |
| | RS 50 REPLICA | 50 | 99-06 | FD162 | FD048 |
| | RS 50, ROSSI REPLICA | 50 | 98-98 | FD153 | FD048 |
| | RX 50 | 50 | 90-91 | FD071 | FD048 |
| | RX 50 | 50 | 92-92 | FD133 | FD048 |
| | RX 50 | 50 | 93- | FD162 | FD048 |
| | TUAREG RALLY 50 | 50 | 90- | FD071 | FD048 |
| | TUONO 50 | 50 | 03- | FD162 | FD048 |
| **CAGIVA** | | | | | |
| | K3 50 | 50 | 92- | FD012 | FD048 |
| | STRADA PRIMA 50 | 50 | 92- | FD118 | FD048 |
| | W4-50 PRO ACTION | 50 | 92- | FD012 | FD048 |
| | BLUS 125 | 125 | 93- | FD074 | FD048 |
| **CONTI** | | | | | |
| | PROMO CUP | 50 | 00-03 | FD048 | FD153 |
| **DERBI** | | | | | |
| | GPR 50 SPORT | 50 | 93-96 | FD084 | FD048 |
| | GPR 75 SPORT | 75 | 90- | FD084 | FD048 |
| **FANTIC** | | | | | |
| | CABALLERO 50 RC | 50 | 94- | FD162 | FD048 |
| | CABALLERO 50 RS, RC | 50 | 92-93 | FD012 | FD048 |
| | CABALLERO 80 RC | 50 | 94- | FD074 | FD048 |
| **GARELLI** | | | | | |
| | 50 KOALA | 50 | 94- | FD048 | FD048 |
| **GENERIC** | | | | | |
| | TOXIC 50 | 50 | 07- | FD162 | FD048 |
| | TRIGGER SM 50 | 50 | 06- | FD162 | FD048 |
| | TRIGGER X 50 | 50 | 06- | FD162 | FD048 |
| **KEEWAY** | | | | | |
| | TX 50 | 50 | 10- | FD162 | FD048 |
| | X-RAY | 50 | 07- | FD162 | FD048 |
| | X-RAY SC SUPERMOTO | 50 | 07- | FD162 | FD048 |
| | TX 125 | 125 | 10- | FD162 | FD048 |

## FD 057

mm: 63,9 x 55,2 | 9,0 | A | A

G1054 | G1050 | G1371 |

| BRAND MARCA | MODEL MODELO | C.C. | YEAR | FRONT | REAR |
|---|---|---|---|---|---|
| **YAMAHA** | | | | | |
| | TZR 125 | 125 | 90-91 | FD057 | FD069 |

## FD 063

mm: 81,8 x 42,3 | 7,2 | A | A

G1054 | G1805 | G1397 |

| BRAND MARCA | MODEL MODELO | C.C. | YEAR | FRONT | REAR |
|---|---|---|---|---|---|
| **HONDA** | | | | | |
| | SCV 110 LEAD | 110 | 08- | FD063 | MF051 |
| **HONDA BRAZIL** | | | | | |
| | LEAD 110 | 100 | 08- | FD063 | MF051 |
| **KYMCO** | | | | | |
| | NEXXON 50 | 50 | 07-08 | FD063 | FD145 |
| | NEXXON 125 | 125 | 07-08 | FD063 | FD145 |
| | STRAIGHT 125 | 125 | 07- | FD063 | FD145 |

## FD 065

mm: 36,0 x 45,0 | 6,0 | A | A

G1054 | G1050 | G1805 | G1380 |

| BRAND MARCA | MODEL MODELO | C.C. | YEAR | FRONT | REAR |
|---|---|---|---|---|---|
| **APRILIA** | | | | | |
| | RS 50 | 50 | 07- | FD220 | FD065 |
| **BETA** | | | | | |
| | ALP 50 | 50 | 94- | FD065 | FD102 |
| | AR-T | 50 | 03-04 | FD162 | FD065 |
| | EIKON | 50 | 99- | FD065 | FD065 |
| | MX 50 ENDURO | 50 | 92- | FD065 | FD065 |
| | RK6 50 | 50 | 94-98 | FD133 | FD065 |
| | RK6T 50 | 50 | 99-01 | FD065 | FD065 |
| | RK6T 50 SUPERMOTARD | 50 | 99-01 | FD065 | FD065 |
| | RR-T | 50 | 99-01 | FD133 | FD065 |
| | RR-T | 50 | 02-04 | FD065 | FD065 |
| | RR-T | 50 | 05- | FD065 | FD065 |
| | ST 50 | 50 | 94- | FD065 | FD102 |
| | ZERO 50 | 50 | 94- | FD065 | FD102 |
| **BLATA** | | | | | |
| | ENDURO 125 | 125 | 07- | FD341 | FD065 |
| **BULTACO** | | | | | |
| | ASTRO | 50 | 00- | FD133 | FD065 |
| | LOBITO | 50 | 99- | FD133 | FD065 |
| **CH RACING** | | | | | |
| | WSM 50 MOTARD | 50 | 05- | FD133 | FD065 |
| | WXE 50 ENDURO | 50 | 05- | FD133 | FD065 |
| | WXE 125 ENDURO | 125 | 05- | FD133 | FD065 |
| **CLIPIC** | | | | | |
| | CJ 50 E | 50 | 99- | FD065 | FD065 |
| | CJ 50 R | 50 | 99- | FD065 | FD065 |
| | CJ RACING | 50 | 99- | FD065 | FD065 |
| | CJ 80 R | 80 | 99- | FD065 | FD065 |
| **CONTI** | | | | | |
| | RX 356 V3 | 80 | 05- | FD341 | FD065 |
| **CPI** | | | | | |
| | SM POWER | 50 | 06- | FD065 | FD065 |
| | SUPERCROSS 50 | 50 | 06- | FD065 | FD065 |
| | SUPERCROSS 50 ULTIMATE | 50 | 06- | FD065 | FD065 |
| | SX POWER | 50 | 06- | FD065 | FD065 |
| **DERBI** | | | | | |
| | ATLANTIS | 50 | 99- | FD065 | MF301 |
| | AVENTURA | 50 | 96- | FD065 | MF625 |
| | BLACK DEVIL | 50 | 04- | FD162 | FD065 |
| | DRD 50 PRO R | 50 | 06- | FD220 | FD065 |
| | DRD 50 R RACING | 50 | 06- | FD162 | FD065 |
| | DRD 50 R RACING PRO | 50 | 06- | FD220 | FD065 |
| | DRD 50 SM EDITION / RACING | 50 | 06- | FD220 | FD065 |
| | FENIX | 50 | 93- | FD065 | MF625 |
| | FURAX 50 | 50 | 96- | FD065 | MF625 |
| | GP 1 | 50 | 01-04 | FD065 | FD065 |
| | GP 1 | 50 | 05- | FD220 | FD065 |
| | GP 1 OPEN | 50 | 06- | FD162 | FD065 |
| | GPR 50 NUDE | 50 | 04- | FD220 | FD065 |
| | GPR 50 R | 50 | 97-03 | FD133 | FD065 |
| | GPR 50 R | 50 | 04-09 | FD220 | FD065 |
| | GPX 1 | 50 | 06- | FD220 | FD065 |
| | HUNTER 50 | 50 | 96- | FD065 | MF301 |
| | PADDOCK 50 | 50 | 96- | FD065 | MF301 |
| | PREDATOR | 50 | 98-98 | FD065 | FD065 |
| | PREDATOR 0.2 | 50 | 99- | FD065 | MF301 |
| | PROGRESS 50 | 50 | 97- | FD065 | MF301 |
| | RECORD 50 | 50 | 98- | FD065 | MF301 |
| | SABANA 50 | 50 | 90- | FD065 | FD065 |
| | SENDA | 50 | 93-95 | FD065 | MF625 |
| | SENDA | 50 | 97- | FD065 | FD065 |
| | SENDA R DRD | 50 | 02-04 | FD162 | FD065 |
| | SENDA SM DRD | 50 | 02-04 | FD065 | FD065 |
| | SENDA SM DRD 50 EVO | 50 | 09- | FD220 | FD065 |
| | SENDA SM DRD LIMITED | 50 | 05- | FD065 | FD065 |
| | SENDA X-TREM R | 50 | 03- | FD065 | FD065 |
| | SUPERMOTARD | 50 | 98- | FD065 | FD065 |
| | VAMOS | 50 | 94-94 | FD065 | MF625 |
| | VAMOS R | 50 | 96- | FD065 | MF625 |
| | VARIANT SPORT R | 50 | 94- | FD065 | MF625 |
| | WAVE | 50 | 00- | FD065 | MF301 |
| | X RACE 50 | 50 | 06- | FD065 | FD065 |
| | GPR 80 R CUP | 80 | 04- | FD341 | FD065 |
| | ATLANTIS 100 | 100 | 01- | FD065 | MF301 |
| | ATLANTIS 100 4T | 100 | 01- | FD065 | MF301 |
| | GPR 125 NUDE | 125 | 04- | FD341 | FD065 |
| | GPR 125 R | 125 | 04-08 | FD341 | FD065 |
| | SENDA DRD 125 R RACING | 125 | 06- | FD162 | FD065 |
| | SENDA R 4T | 125 | 04- | FD162 | FD065 |
| | SENDA SM 4T | 125 | 04- | FD162 | FD065 |
| **FACTORY** | | | | | |
| | CHRONO SM 50 | 50 | 02- | FD162 | FD065 |
| | PHANTHOM R 12 | 50 | 03- | FD224 | FD065 |
| | PHANTHOM R 14 | 50 | 03- | FD224 | FD065 |
| | YR 50 DESERT | 50 | 01- | FD162 | FD065 |
| **FANTIC** | | | | | |
| | 50 K-ROO | 50 | 92- | FD065 | FD065 |
| | 50 TRIAL | 50 | 92- | FD065 | FD065 |
| | CLUBMAN 50 | 50 | 95- | FD065 | FD065 |
| | KET ROO | 50 | 93- | FD065 | FD065 |
| **GAS GAS** | | | | | |
| | 125 PAMPERA | 125 | 96-98 | FD065 | FD065 |
| | 125 PAMPERA 4T | 125 | 99-02 | FD065 | FD065 |
| **GILERA-PIAGGIO** | | | | | |
| | GP 50 | 50 | 02- | FD133 | FD065 |
| | GPR 50 POGGIALI REPLICA | 50 | 03- | FD133 | FD065 |



For other models years previous to 1990 visit **www.galferonline.es** · Para otros modelos anteriores al año 1990 visitar **www.galferonline.es**
For consult TÜV (ABE) type approvals visit **www.galfermoto.com --> DOWNLOAD --> TÜV CERTIFICATIONS** · Para consultar las homologaciones TÜV (ABE) visitar **www.galfermoto.com --> DESCARGAS --> CERTIFICACIONES TÜV**

| | | | | |
|---|---|---|---|---|
| GSM 50 | 50 | 00- | FD065 | FD065 |
| H@K 50 | 50 | 01- | FD065 | FD065 |
| OFF ROAD R SIX SPEED 50 | 50 | 97- | FD065 | FD065 |
| RCR 50 | 50 | 04- | FD065 | FD065 |
| SURFER 50 | 50 | 00- | FD065 | MF |
| ZULU 50 | 50 | 01- | FD065 | FD065 |
| 125 SATURNO PIUMA | 125 | 90- | FD068 | FD065 |
| SC 125 | 125 | 06- | FD341 | FD065 |
| **GOVECS** | | | | |
| GO ! S1.2 | EL | 10- | FD065 | MF |
| **HM** | | | | |
| CRE BAJA | 50 | 03-08 | FD162 | FD065 |
| CRE SIX | 50 | 03- | FD162 | FD065 |
| DERAPAGE | 50 | 03-08 | FD162 | FD065 |
| **ITALJET** | | | | |
| DRAGSTER | 50 | 98- | FD065 | FD065 |
| TORPEDO 50 | 50 | 00- | FD065 | MF |
| DRAGSTER | 125 | 00- | FD065 | FD065 |
| FORMULA 125 | 125 | 97- | FD065 | FD065 |
| TORPEDO 125 | 125 | 99-06 | FD065 | MF |
| **MACBOR** | | | | |
| 565 | 50 | 04- | FD224 | FD065 |
| 510 RACING | 50 | 04- | FD224 | FD065 |
| 512 RACING | 50 | 04- | FD224 | FD065 |
| 515 RACING | 50 | 04- | FD224 | FD065 |
| **MALAGUTI** | | | | |
| DRAKON NKD | 50 | 05- | FD220 | FD065 |
| XSM | 50 | 05- | FD162 | FD065 |
| XTM | 50 | 04- | FD065 | FD065 |
| **MBK MOTOBEKANE** | | | | |
| X-LIMIT | 50 | 04- | FD162 | FD065 |
| X-POWER | 50 | 03- | FD162 | FD065 |
| **MECATECNO** | | | | |
| 50 ALEVIN | 50 | 94- | FD065 | MF |
| 50 RACING CR-7 | 50 | 93- | FD065 | MF |
| 50 RACING CR-8 | 50 | 93- | FD065 | MF |
| 75 CR | 75 | 91- | FD065 | MF |
| **METRAKIT** | | | | |
| FUN 2 STROKE | 50 | 05- | FD065 | FD224 |
| FUN 4 STROKE | 50 | 05- | FD065 | FD224 |
| MINI GP | 50 | 03- | FD065 | FD224 |
| **MONKEY BIKE** | | | | |
| MB 125 SM | 125 | 06- | FD162 | FD065 |
| MB 125 TR | 125 | 06- | FD162 | FD065 |
| **MOTORHISPANIA** | | | | |
| FURIA | 50 | 99- | FD065 | FD065 |
| RX RACING | 50 | 99- | FD133 | FD065 |
| RYZ ENDURO | 50 | 99- | FD065 | FD065 |
| RYZ PRO ENDURO | 50 | 09- | FD133 | FD065 |
| RYZ PRO SM | 50 | 09- | FD133 | FD065 |
| RYZ SM | 50 | 99-04 | FD133 | FD065 |
| RYZ SM | 50 | 05- | FD133 | FD065 |
| TRAIL 50 LASER AIRE, AGUA | 50 | 93- | FD065 | MF |
| URBAN BIKE | 50 | 04- | FD133 | FD065 |
| XR G-30 | 50 | 93- | FD065 | MF |
| ARENA ENDURO | 125 | 05- | FD065 | FD065 |
| ARENA MOTARD | 125 | 05- | FD133 | FD065 |
| **PEUGEOT** | | | | |
| ELISTAR AVANTAGE 2 | 50 | 05- | FD065 | FD270 |
| ELISTAR TSDI | 50 | 02- | FD065 | FD270 |
| ELYSEO | 50 | 98- | FD065 | MF002 |
| FOX | 50 | 95- | FD065 | MF760 |
| JET C TECH | 50 | 11- | FD065 | FD065 |
| JET DARKSIDE | 50 | 11- | FD065 | FD065 |
| JET FORCE | 50 | 03- | FD065 | FD065 |
| JET H2i | 50 | 11- | FD065 | FD065 |
| JET ICEBLADE | 50 | 11- | FD065 | FD065 |
| LOOXOR | 50 | 01- | FD065 | MF002 |
| LUDIX 50 ELEGANCE/SNAKE/TREND | 50 | 04- | FD065 | MF002 |
| SPEEDFIGHT LC | 50 | 97- | FD065 | FD065 |
| SQUAB | 50 | 95- | FD065 | MF002 |
| SV EXECUTIVE | 50 | 95- | FD065 | MF002 |
| TREKKER ROAD | 50 | 97- | FD065 | MF002 |
| VIVACITY | 50 | 99- | FD065 | MF002 |
| XP 6 ENDURO | 50 | 05- | FD065 | FD065 |
| XP 6 SM | 50 | 05- | FD065 | FD065 |
| XP 6 TOP ROAD | 50 | 06- | FD065 | FD065 |
| XPS ENDURO | 50 | 05- | FD065 | FD065 |

| | | | | |
|---|---|---|---|---|
| XPS SM | 50 | 05- | FD162 | FD065 |
| XPS STREET | 50 | 05- | FD162 | FD065 |
| XR 6 | 50 | 05- | FD133 | FD065 |
| XR 7 | 50 | 08-09 | FD341 | FD065 |
| ZENITH LM | 50 | 95- | FD065 | MF002 |
| ELYSEO 100 | 100 | 98- | FD065 | MF002 |
| LOOXOR | 100 | 01- | FD065 | FD065 |
| SPEEDFIGHT 100 | 100 | 97- | FD065 | FD065 |
| SPEEDFIGHT 100 | 100 | 97- | FD094 | FD065 |
| TREKKER ROAD | 100 | 98- | FD065 | MF002 |
| VIVACITY | 100 | 99- | FD065 | MF002 |
| ELYSEO 125 | 125 | 98-00 | FD065 | MF002 |
| ELYSEO 125 | 125 | 01- | FD065 | FD065 |
| LOOXOR | 125 | 01-04 | FD065 | FD065 |
| LUDIX 125 | 125 | 04- | FD065 | MF002 |
| XPS CT 125 | 125 | 06- | FD065 | FD065 |
| **PIAGGIO** | | | | |
| DIESIS | 50 | 03- | FD065 | MF301 |
| **RIEJU** | | | | |
| DRAC AIR, DL | 50 | 94- | FD065 | MF |
| MRX 50 | 50 | 03-07 | FD162 | FD065 |
| MRX 50 PRO | 50 | 08- | FD220 | FD065 |
| RR 50 CASTROL | 50 | 99- | FD133 | FD065 |
| RR 50 GV | 50 | 96-98 | FD065 | FD065 |
| RR DL | 50 | 94-95 | FD065 | MF |
| RR SPIKE | 50 | 99- | FD065 | FD065 |
| RS-1 AGUA | 50 | 94-95 | FD065 | MF |
| RS-1 EVOLUTION | 50 | 98-02 | FD065 | FD065 |
| SMX | 50 | 02- | FD065 | FD065 |
| SPIKE X 50 | 50 | 06- | FD065 | FD065 |
| TANGO 50 | 50 | 07-08 | FD220 | FD065 |
| TANGO 50 | 50 | 09- | FD252 | FD065 |
| TANGOO 50 | 50 | 08- | FD220 | FD065 |
| WINDY | 50 | 94- | FD065 | MF630 |
| RST 80 | 80 | 90- | FD071 | FD065 |
| MXR 125 4T | 125 | 03- | FD133 | FD065 |
| SMX 125 | 125 | 08- | FD220 | FD065 |
| SMX 125 4T | 125 | 03-07 | FD133 | FD065 |
| TANGO 125 | 125 | 06-10 | FD220 | FD065 |
| TANGO 125 | 125 | 11- | FD409 | FD065 |
| TANGO 125 PRO | 125 | 07- | FD220 | FD065 |
| **ROXON** | | | | |
| DUEL SM | 50 | 06- | FD065 | FD065 |
| DUEL TT | 50 | 06- | FD065 | FD065 |
| **SHERCO** | | | | |
| 50 IPONE LIMITED | 50 | 05- | FD133 | FD065 |
| CITYCORP 125 | 125 | 03- | FD133 | FD065 |
| CITYCORP 125 SM | 125 | 03- | FD133 | FD065 |
| **SIAMOTO** | | | | |
| CAPRI | 50 | 99- | FD065 | FD065 |
| FALKON | 50 | 99- | FD065 | FD065 |
| CAPRI | 125 | 99- | FD065 | FD065 |
| FALKON | 125 | 99- | FD065 | FD065 |
| **SUMCO** | | | | |
| 125 KR | 125 | 05- | FD162 | FD065 |
| KIRA KR 125 SM | 125 | 06- | FD162 | FD065 |
| KIRA KR 125 TR | 125 | 06- | FD162 | FD065 |
| **SUZUKI** | | | | |
| DR 50 LC | 50 | 94- | FD065 | MF608 |
| KATANA 50 DD | 50 | 99- | FD153 | FD065 |
| RMX 50 | 50 | 96- | FD065 | FD065 |
| SMX 50 | 50 | 00- | FD065 | FD065 |
| ZILLION 50 | 50 | 99- | FD065 | MF301 |
| **TOMOS** | | | | |
| 50 SE | 50 | 04- | FD133 | FD065 |
| STEERMATE | 50 | 04- | FD065 | MF |
| YOUNGSTR RACING | 50 | 04- | FD065 | MF |
| 125 SE | 125 | 04- | FD133 | FD065 |
| 125 SM | 125 | 05- | FD220 | FD065 |
| **VECTRIX** | | | | |
| VECTRIX ELECTRIC 3W | EL | 07- | FD065 | FD138 |
| **YAMAHA** | | | | |
| DT 50 LCD | 50 | 04-04 | FD162 | FD065 |
| DT 50 R | 50 | 05- | FD065 | FD270 |
| DT 50 SUPERMOTARD | 50 | 05- | FD162 | FD065 |
| TZR 50 RR | 50 | 03- | FD162 | FD065 |

## FD 068

mm: 69,6 x 51,0 | 8,2 | A | A

G1054 | G1050 | G1370 | G1375 | G1003-1300

| BRAND MARCA | MODEL MODELO | C.C. | YEAR | FRONT | REAR |
|---|---|---|---|---|---|
| **BENELLI** | | | | | |
| 666 | | 125 | 98- | FD068 | FD220 |
| **BETA** | | | | | |
| JONATHAN | | 125 | 00- | FD068 | FD165 |
| **CAGIVA** | | | | | |
| MITO 125 EDDY | | 125 | 93- | FD068 | FD012 |
| MITO 125 SP 525 | | 125 | 08- | FD068 | FD012 |
| PLANET 125 | | 125 | 98- | FD068 | FD012 |
| RAPTOR 125 | | 125 | 03- | FD068 | FD012 |
| **GILERA-PIAGGIO** | | | | | |
| 125 SATURNO PIUMA | | 125 | 90- | FD068 | FD065 |
| **HONDA** | | | | | |
| RS 125 R | | 125 | 93- | FD068 | FD113 |
| **P.G.O.** | | | | | |
| G-MAX | | 125 | 05- | FD068 | FD145 |
| **SACHS** | | | | | |
| X ROAD 125 | | 125 | 04- | FD068 | FD135 |
| **YAMAHA** | | | | | |
| TDR 125 R | | 125 | 91-92 | FD068 | FD069 |
| TZR 125, MARLBORO RED ROCKET | | 125 | 93- | FD068 | FD012 |

## FD 069

mm: 68,1 x 56,0 | 9,0 | A | A

G1054 | G1370 | | |

| BRAND MARCA | MODEL MODELO | C.C. | YEAR | FRONT | REAR |
|---|---|---|---|---|---|
| **YAMAHA** | | | | | |
| TDR 125 R | | 125 | 91-92 | FD068 | FD069 |
| TZR 125 | | 125 | 90-91 | FD057 | FD069 |
| TZR 125 | | 125 | 92- | FD099 | FD069 |

## FD 071

mm: 31,6 x 52,1 | 5,5 | A | A

G1054 | G1805 | | |

| BRAND MARCA | MODEL MODELO | C.C. | YEAR | FRONT | REAR |
|---|---|---|---|---|---|
| **APRILIA** | | | | | |
| PEGASO 50 | | 50 | 94- | FD084 | FD071 |
| RX 50 | | 50 | 90-91 | FD071 | FD048 |
| TUAREG RALLY 50 | | 50 | 90- | FD071 | FD048 |
| TUAREG WIND 50 | | 50 | 90- | FD071 | MF |
| **ATALA** | | | | | |
| MASTER 4 | | 50 | 94- | FD071 | MF |
| **BENELLI** | | | | | |
| DEVIL 50 | | 50 | 95- | FD085 | FD071 |
| MASTER 4 50 | | 50 | 95- | FD071 | MF |
| SPRING 50 | | 50 | 95- | FD085 | FD071 |
| DEVIL 80 | | 80 | 95- | FD085 | FD071 |
| **FANTIC** | | | | | |
| CICLONE | | 50 | 94- | FD071 | MF |
| **GARELLI** | | | | | |
| 50 BIG WHEELS | | 50 | 94- | FD136 | FD071 |
| 50 PONY, SR | | 50 | 94- | FD136 | FD071 |
| 50 SUPER CICLONE AC | | 50 | 91- | FD071 | MF722 |
| **MALAGUTI** | | | | | |
| 50 CUSTOM FOX | | 50 | 93- | FD071 | MF |
| 50 RST | | 50 | 90- | FD071 | FD071 |
| CROSSER 50 | | 50 | 99- | FD071 | MF |
| F 15 FIRE FOX | | 50 | 96-97 | FD071 | MF630 |
| F12 PHANTOM AIRE/AGUA 50 | | 50 | 94-97 | FD071 | MF002 |

| | | | | |
|---|---|---|---|---|
| **MOTRON** | | | | |
| GTO MAX, WF, R | 50 | 94- | FD071 | MF |
| **RIEJU** | | | | |
| CROSSER CR1 | 50 | 96- | FD071 | MF002 |
| FIRST | 50 | 95- | FD071 | MF002 |
| RST 80 | 80 | 90- | FD071 | FD065 |
| **SIMSON** | | | | |
| 50 SR XCE | 50 | 94- | FD071 | MF |
| 53 S OR, B, N | 53 | 94- | FD071 | MF |
| 80 XC, XCE | 80 | 94- | FD071 | MF |
| ALL MODELS | 80 | 95- | FD071 | MF |
| 83 S OR, B | 83 | 94- | FD071 | MF |

## FD 073

mm: 77,4 x 42,3 | 7,0 | A | A

G1054 | G1050 | G1805 |

| BRAND MARCA | MODEL MODELO | C.C. | YEAR | FRONT | REAR |
|---|---|---|---|---|---|
| **CCM** | | | | | |
| C-XR 125 E | | 125 | 08- | FD073 | FD095 |
| TL 125 | | 125 | 08- | FD073 | FD145 |
| **HONDA** | | | | | |
| NSR 50 | | 50 | 94-95 | FD073 | FD093 |
| CHA 125 SPACY | | 125 | 98- | FD073 | MF |
| **HYOSUNG** | | | | | |
| COMET GT 125 | | 125 | 02- | FD073 | FD073 |
| COMET GT 125 R | | 125 | 06- | FD073 | FD073 |
| GT 125 Pi | | 125 | 13- | FD073 | FD073 |
| GV 125 AQUILA | | 125 | 05- | FD073 | MF |
| KARION | | 125 | 02- | FD073 | MF |
| XRX 125 | | 125 | 00- | FD073 | MF |
| **KYMCO** | | | | | |
| ACTIV SR 50 | | 50 | 08- | FD073 | MF |
| JETIX | | 50 | 09- | FD073 | FD145 |
| NEXXON 50 | | 50 | 09- | FD073 | FD073 |
| JETIX | | 125 | 10- | FD073 | FD145 |
| NEXXON 125 | | 125 | 09- | FD073 | FD073 |
| **LAMBRETTA** | | | | | |
| PATO 50 N | | 50 | 09- | FD073 | FD073 |
| PATO 125 N | | 125 | 09- | FD073 | FD073 |
| **MOTOM** | | | | | |
| DOLCEVITA | | 125 | 07- | FD175 | FD073 |
| TRANSCITY | | 125 | 07- | FD169 | FD073 |
| **PEUGEOT** | | | | | |
| SPEEDFIGHT 3 | | 50 | 09- | FD073 | MF002 |
| SPEEDFIGHT 3 LC | | 50 | 09- | FD073 | FD220 |
| VOX CITY | | 125 | 10- | FD073 | MF |
| **SYM** | | | | | |
| WOLF LEGEND | | 125 | 02- | FD073 | MF |
| **VENTO** | | | | | |
| WORKMAN | | 110 | 06- | FD073 | MF |

## FD 074

mm: 79,0 x 47,8 | 7,0 | A | A

G1054 | G1050 | G1805 | G1370 |

| BRAND MARCA | MODEL MODELO | C.C. | YEAR | FRONT | REAR |
|---|---|---|---|---|---|
| **APRILIA** | | | | | |
| SPORT CITY ONE 50 | | 50 | 08- | FD074 | MF |
| SCARABEO 125 4T | | 125 | 98-04 | FD074 | FD228 |
| SPORT CITY 125 | | 125 | 04- | FD074 | FD228 |
| SPORT CITY ONE 125 | | 125 | 08- | FD074 | MF |
| **CAGIVA** | | | | | |
| BLUS 125 | | 125 | 93- | FD074 | FD048 |
| ROADSTER 125 | | 125 | 93- | FD074 | MF |
| **DERBI** | | | | | |
| BOULERVARD S | | 125 | 07- | FD074 | FD228 |
| RAMBLA 125 | | 125 | 07- | FD074 | FD228 |

| | | | | |
|---|---|---|---|---|
| **FANTIC** | | | | |
| CABALLERO 80 RC | 50 | 94- | FD074 | FD048 |
| **GILERA-PIAGGIO** | | | | |
| COUGAR 125 | 125 | 01- | FD074 | MF |
| **HONDA** | | | | |
| CRM 75, R | 75 | 93- | FD074 | MF002 |
| CRM 125, R | 125 | 90- | FD074 | FD012 |
| MTX 125 R2HI | 125 | 91- | FD074 | MF002 |
| NSR 125 F ( I ) | 125 | 90- | FD074 | FD190 |
| NSR 125 R ( I ) | 125 | 90- | FD074 | FD190 |
| NX 125 ( I ) | 125 | 90-92 | FD074 | MF003 |
| NX 125 ( I ) TRANSCITY | 125 | 93- | FD074 | MF003 |
| XL 125 P3 ( I ) | 125 | 91-97 | FD074 | MF003 |
| **MALAGUTI** | | | | |
| 80 DUNE | 80 | 93- | FD074 | MF |
| 125 RUNNER RALLY | 125 | 93- | FD074 | MF712 |
| MADISON 125 R 125 | 125 | 06-06 | FD074 | FD228 |

## FD 075

mm: 55,8 x 37,2 | 10,0 | A | B

mm: 85,0 x 42,1 | 8,0 | A | B

G1054 | G1050 | G1805 | G1396 |

| BRAND MARCA | MODEL MODELO | C.C. | YEAR | FRONT | REAR |
|---|---|---|---|---|---|
| **APRILIA** | | | | | |
| RX 125 | | 125 | 92-92 | FD133 | FD075 |
| **CAGIVA** | | | | | |
| K7 125 N90 | | 125 | 91- | FD089 | FD075 |
| **FACTORY** | | | | | |
| CHRONO SM 50 | | 50 | 99-01 | FD075 | FD075 |
| YR 50 | | 50 | 98-00 | FD075 | FD075 |
| **FANTIC** | | | | | |
| REGOLARITA CASA | | 50 | 07- | FD162 | FD075 |
| SUPERSEI MOTARD | | 50 | 07- | FD162 | FD075 |
| REGOLARITA CASA | | 125 | 07- | FD162 | FD075 |
| **GILERA-PIAGGIO** | | | | | |
| 50 VX 10 | | 50 | 92- | FD075 | FD075 |
| **HM** | | | | | |
| CRE BAJA | | 50 | 99-02 | FD075 | FD075 |
| CRE SIX | | 50 | 99-02 | FD162 | FD075 |
| DERAPAGE | | 50 | 99-02 | FD075 | FD075 |
| **ITALJET** | | | | | |
| MILLENNIUM 125 | | 125 | 00-01 | FD075 | MF |
| **KAWASAKI** | | | | | |
| KMX 125 | | 125 | 99- | FD177 | FD075 |
| **KYMCO** | | | | | |
| VISA R | | 50 | 11- | FD075 | MF002 |
| VISA R | | 110 | 11- | FD075 | MF002 |
| AGILITY CITY 125 | | 125 | 09- | FD261 | FD075 |
| **MOTORHISPANIA** | | | | | |
| MH 10 50 LC | | 50 | 12- | FD075 | FD075 |
| MH 10 50 LC SM | | 50 | 12- | FD075 | FD075 |
| **RIEJU** | | | | | |
| RS-3 | | 125 | 13- | FD341 | FD075 |
| RS-3 NKD | | 125 | 13- | FD341 | FD075 |
| **SUZUKI** | | | | | |
| GN 125 | | 125 | 93- | FD075 | MF151 |
| RGV 125 AIR COOLED | | 125 | 98- | FD075 | MF |
| **YAMAHA** | | | | | |
| DT 50 SUPERMOTARD | | 50 | 03-04 | FD084 | FD075 |

## FD 076

mm: 46,4 x 45,3 | 7,8 | A | A

G1054 | G1805 | G1396 | G1397 |

| BRAND MARCA | MODEL MODELO | C.C. | YEAR | FRONT | REAR |
|---|---|---|---|---|---|
| **SUZUKI** | | | | | |
| DR 125 S | | 125 | 93-97 | FD076 | MF151 |
| DR 125 SE | | 125 | 94- | FD076 | MF151 |

## FD 079

mm: 71,3 x 36,2 | 8,5 | A | A

G1050 | G1050 | G1805 | G1370 |

| BRAND MARCA | MODEL MODELO | C.C. | YEAR | FRONT | REAR |
|---|---|---|---|---|---|
| **BENELLI** | | | | | |
| BUNNY 50 | | 50 | 95- | FD079 | MF |
| **CFMOTO** | | | | | |
| E-CHARM | | 125 | 10- | FD187 | FD079 |
| **GILERA-PIAGGIO** | | | | | |
| 125 APACHE | | 125 | 92- | FD089 | FD079 |
| **MBK MOTOBEKANE** | | | | | |
| X-POWER | | 50 | 99-02 | FD117 | FD079 |
| FLAME | | 125 | 00-03 | FD079 | MF458 |
| **SACHS** | | | | | |
| BEE 50 | | 50 | 08- | FD079 | MF |
| BEE 125 | | 125 | 08- | FD079 | MF |
| **YAMAHA** | | | | | |
| CR 50 Z | | 50 | 92-93 | FD079 | MF458 |
| DT 50 R | | 50 | 94-95 | FD079 | MF453 |
| TZR 50 RR | | 50 | 97-02 | FD117 | FD079 |
| DT 80 LC | | 80 | 93- | FD079 | MF461 |
| TZR 80 RR | | 80 | 92- | FD117 | FD079 |
| CIGNUS 125 / R | | 125 | 96-02 | FD079 | MF458 |
| DT 125 | | 125 | 99- | FD079 | FD079 |
| DT 125 R | | 125 | 05- | FD079 | FD114 |
| TDR 125 R | | 125 | 93- | FD169 | FD079 |
| VINO 125 | | 125 | 03- | FD079 | MF458 |
| YBR 125 | | 125 | 05-06 | FD079 | MF640 |

## FD 084

mm: 31,6 x 57,0 | 5,5 | A | A

G1054 | G1050 | G1805 |

| BRAND MARCA | MODEL MODELO | C.C. | YEAR | FRONT | REAR |
|---|---|---|---|---|---|
| **APRILIA** | | | | | |
| AF1 50 FUTURA | | 50 | 90- | FD084 | FD048 |
| CLASSIC 50 | | 50 | 93- | FD084 | MF721 |
| EUROPA 50 | | 50 | 91- | FD084 | FD048 |
| PEGASO 50 | | 50 | 94- | FD084 | FD071 |
| RED ROSE 50 | | 50 | 92- | FD084 | MF721 |
| CLASSIC 80 | | 80 | 93- | FD084 | MF721 |
| **ATALA** | | | | | |
| CAROSELLO | | 50 | 99- | FD084 | MF |
| **BETA** | | | | | |
| MX 50 | | 50 | 92- | FD084 | FD084 |
| TEMPO 50 | | 50 | 94- | FD084 | MF630 |
| **DERBI** | | | | | |
| GPR 50 SPORT | | 50 | 93-96 | FD084 | FD048 |
| GPR 75 SPORT | | 75 | 90- | FD084 | FD048 |
| **MALAGUTI** | | | | | |
| F 15 FIRE FOX LC | | 50 | 98- | FD084 | FD152 |
| F12 PHANTOM | | 50 | 98- | FD084 | MF002 |
| **MOTRON** | | | | | |
| XLE | | 50 | 94- | FD084 | MF |
| **SIAMOTO** | | | | | |



For other models years previous to 1990 visit **www.galferonline.es** - Para otros modelos anteriores al año 1990 visitar **www.galferonline.es**
For consult TÜV (ABE) type approvals visit **www.galfermoto.com --> DOWNLOAD --> TÜV CERTIFICATIONS** - Para consultar las homologaciones TÜV (ABE) visitar **www.galfermoto.com --> DESCARGAS --> CERTIFICACIONES TÜV**

| | | | | |
|---|---|---|---|---|
| SCROSS | 50 | 99- | FD084 | MF |
| **YAMAHA** | | | | |
| DT 50 LCD | 50 | 96-03 | FD084 | MF453 |
| DT 50 SUPERMOTARD | 50 | 03-04 | FD084 | FD075 |
| **ZANELLA** | | | | |
| RM3 | 50 | 94- | FD084 | MF |

## FD 085

mm: 67,5 x 50,7 | 7,5 | A | A

G1054 | G1050

| BRAND MARCA | MODEL MODELO | C.C. | YEAR | FRONT | REAR |
|---|---|---|---|---|---|
| **BENELLI** | | | | | |
| DEVIL 50 | | 50 | 95- | FD085 | FD071 |
| SPRING 50 | | 50 | 95- | FD085 | FD071 |
| DEVIL 80 | | 80 | 95- | FD085 | FD071 |
| **RIEJU** | | | | | |
| EVASION | | 50 | 09- | FD085 | MF |

## FD 086

mm: 77,4 x 42,3 | 7,7 | A | B

mm: 98,8 x 42,3 | 7,5 | A | B

G1054 | G1805 | G1370 | G1396 | G1397

| BRAND MARCA | MODEL MODELO | C.C. | YEAR | FRONT | REAR |
|---|---|---|---|---|---|
| **ATK** | | | | | |
| BULL 50 | | 50 | 94- | FD086 | FD086 |
| BULLET 50 CN N | | 50 | 94- | FD086 | FD086 |
| COBRA 50 | | 50 | 94- | FD086 | FD086 |
| **HYOSUNG** | | | | | |
| GV 125 | | 125 | 00-04 | FD086 | MF |
| **KAWASAKI** | | | | | |
| KLX 125 D-TRACKER | | 125 | 10- | FD086 | FD095 |
| **KEEWAY** | | | | | |
| VIVA II 125 | | 125 | 05- | FD086 | FD175 |
| **KREIDLER** | | | | | |
| E 50 FLORETT | | 50 | 08- | FD086 | MF |
| G 50 FLORETT | | 50 | 08- | FD086 | MF |
| ENDURO 125 DD | | 125 | 08- | FD086 | FD095 |
| NAKED 125 DD RIGHT/DER. | | 125 | 08- | FD086 | |
| SUPERMOTO 125 DD | | 125 | 08- | FD086 | FD095 |
| **PEUGEOT** | | | | | |
| DJANGO ALLURE | | 125 | 14- | FD086 | FD220 |
| DJANGO SPORT | | 125 | 14- | FD086 | FD220 |
| **SUZUKI** | | | | | |
| EN 125 | | 125 | 05- | FD086 | MF151 |
| TS 125 R | | 125 | 90- | FD086 | FD114 |
| **SUZUKI INDONESIA** | | | | | |
| THUNDER 125 | | 125 | 10- | FD086 | MF |
| **YAMAHA BRASIL** | | | | | |
| XTZ 125 | | 125 | 03- | FD086 | MF |
| XTZ 125 X | | 125 | 08- | FD086 | MF |
| YBR 125 | | 125 | 02-08 | FD086 | MF |

## FD 089

mm: 99,8 x 46,2 | 8,3 | A | A

G1054

| BRAND MARCA | MODEL MODELO | C.C. | YEAR | FRONT | REAR |
|---|---|---|---|---|---|
| **APRILIA** | | | | | |
| RX 125 | | 125 | 91-91 | FD089 | FD135 |
| **CAGIVA** | | | | | |
| K7 125 N90 | | 125 | 91- | FD089 | FD075 |
| **GILERA-PIAGGIO** | | | | | |
| 125 APACHE | | 125 | 92- | FD089 | FD079 |
| 125 RC | | 125 | 90- | FD089 | FD012 |
| **LAVERDA** | | | | | |
| 125 NAVARRO | | 125 | 90- | FD089 | FD012 |
| 125 TOLEDO | | 125 | 90- | FD089 | MF684 |
| **ZANELLA** | | | | | |
| PATAGONIA | | 50 | 94- | FD089 | MF |

## FD 090

mm: 95,2 x 34,4 | 8,8 | A | B

mm: 141,0 x 42,4 | 8,3 | A | B

G1054 | G1370

| BRAND MARCA | MODEL MODELO | C.C. | YEAR | FRONT | REAR |
|---|---|---|---|---|---|
| **SUZUKI** | | | | | |
| DR 80 BIG | | 80 | 91- | FD090 | FD114 |

## FD 092

mm: 94,2 x 31,8 | 7,4 | A | A[1]

G1054 | G1805 | G1396

| BRAND MARCA | MODEL MODELO | C.C. | YEAR | FRONT | REAR |
|---|---|---|---|---|---|
| **SYM** | | | | | |
| VOYAGER 125 | | 125 | 05- | FD092 | FD092 |

## FD 093

mm: 75,0 x 36,0 | 10,0 | A | A[1]

G1054 | G1805 | G1396

| BRAND MARCA | MODEL MODELO | C.C. | YEAR | FRONT | REAR |
|---|---|---|---|---|---|
| **BETA** | | | | | |
| ALP 125 | | 125 | 06-07 | FD162 | FD093 |
| **FANTIC** | | | | | |
| REGOLARITA COMPETICION | | 50 | 07- | FD164 | FD093 |
| REGOLARITA COMPETICION | | 125 | 07- | FD164 | FD093 |
| X RIDER 125 | | 125 | 07- | FD164 | FD093 |
| **GAS GAS** | | | | | |
| HALLEY 125 | | 125 | 09- | FD164 | FD093 |
| **HONDA** | | | | | |
| NSR 50 | | 50 | 94-95 | FD073 | FD093 |
| NSF 100 | | 100 | 07- | FD145 | FD093 |
| **HONDA MALASIA** | | | | | |
| SPACY 110 | | 110 | 12- | FD093 | MF |
| **SUZUKI** | | | | | |
| DR 125 SM | | 125 | 08- | FD164 | FD093 |

## FD 094

mm: 47,4 x 37,0 | 10,0 | A | B

mm: 85,0 x 42,1 | 7,8 | A | B

G1054 | G1050 | G1805 | G1396

| BRAND MARCA | MODEL MODELO | C.C. | YEAR | FRONT | REAR |
|---|---|---|---|---|---|
| **ADLY** | | | | | |
| MOTO FOX PLUS | | 50 | 02- | FD094 | MF453 |
| MOTO SILVER FOX | | 50 | 02- | FD094 | MF453 |
| NOBLE 50 | | 50 | 05- | FD094 | MF453 |
| PANTHER 50 | | 50 | 02- | FD094 | MF453 |
| RS SUPERSONIC 50 | | 50 | 06- | FD094 | FD094 |
| SILVER FOX 50 | | 50 | 06- | FD094 | MF453 |
| THUNDER BIKE 50 | | 50 | 06- | FD094 | MF453 |
| NOBLE 100 | | 100 | 05- | FD094 | MF453 |
| PANTHER 100 | | 100 | 02- | FD094 | MF453 |
| SILVER FOX 100 | | 100 | 06- | FD094 | MF453 |
| THUNDER BIKE 100 | | 100 | 06- | FD094 | MF453 |
| NOBLE 125 | | 125 | 05- | FD094 | MF453 |
| SUPER SONIC 125 B | | 125 | 03- | FD094 | FD094 |
| THUNDER BIKE 125 | | 125 | 06- | FD094 | FD094 |
| **AEON** | | | | | |
| AERO 50 | | 50 | 06- | FD094 | MF |
| NOX 50 | | 50 | 06- | FD094 | MF |
| REGAL 50 | | 50 | 06- | FD094 | MF |
| AERO 100 | | 100 | 06- | FD094 | MF |
| NOX 100 | | 100 | 06- | FD094 | MF |
| PULSAR 100 | | 100 | 06- | FD094 | MF |
| NOX 125 | | 125 | 06- | FD094 | MF |
| PULSAR 125 | | 125 | 06- | FD094 | MF |
| URBAN 125 | | 125 | 11- | FD187 | FD094 |
| **CPI** | | | | | |
| HUSSAR | | 50 | 01- | FD094 | MF458 |
| **GARELLI** | | | | | |
| 50 QUEENIE | | 50 | 95- | FD094 | MF |
| **HYOSUNG** | | | | | |
| FAST SF 50 | | 50 | 00- | FD094 | MF |
| SENSE 50 | | 50 | 98- | FD094 | MF |
| SF 50 RALLY | | 50 | 03- | FD094 | MF |
| SUPER CAB PLUS 50 | | 50 | 98- | FD094 | MF |
| EZ 100 | | 100 | 98- | FD094 | MF |
| EXIV 125 | | 125 | 12- | FD176 | FD094 |
| GEN 2.0 | | EL | 10- | FD094 | MF |
| **KAWASAKI** | | | | | |
| KDX 125 SR | | 125 | 90- | FD094 | FD114 |
| **KEEWAY** | | | | | |
| HURRICANE 50 | | 50 | 05- | FD094 | MF |
| PIXEL 50 | | 50 | 08- | FD094 | MF |
| SWAN 50 | | 50 | 05- | FD094 | MF |
| FOCUS 125 | | 125 | 07- | FD094 | MF |
| MATRIX 125 | | 125 | 06-06 | FD094 | MF |
| **MZ/MuZ** | | | | | |
| MOSKITO | | 50 | 00- | FD094 | MF |
| **P.G.O.** | | | | | |
| COMET | | 50 | 92- | FD094 | MF641 |
| GALAXY | | 50 | 93- | FD094 | MF641 |
| MEGA FIFTY | | 50 | 99- | FD094 | MF641 |
| STAR 50 | | 50 | 95- | FD094 | MF609 |
| STAR 80 | | 80 | 95- | FD094 | MF609 |
| **PEUGEOT** | | | | | |
| KISBEE | | 50 | 10- | FD094 | MF |
| SPEEDFIGHT | | 50 | 96- | FD094 | MF002 |
| SPEEDFIGHT 2 | | 50 | 00- | FD094 | MF002 |
| TREKKER OFF ROAD | | 50 | 97- | FD094 | MF002 |
| SPEEDFIGHT 80 | | 80 | 96- | FD094 | MF002 |
| SPEEDFIGHT 100 | | 100 | 97- | FD094 | FD065 |
| **PIAGGIO** | | | | | |
| NRG POWER DD | | 50 | 05- | FD094 | FD200 |
| NRG POWER PURE JET | | 50 | 05- | FD094 | FD200 |
| NRG=MC3 PURE JET | | 50 | 04- | FD094 | FD200 |
| **RIEJU** | | | | | |

| | | | | |
|---|---|---|---|---|
| RS-2 | 50 | 06- | FD298 | FD094 |
| RS-2 | 125 | 06- | FD298 | FD094 |
| RS-2 NKD | 125 | 06- | FD298 | FD094 |
| **SIAMOTO** | | | | |
| BIRDIE | 50 | 99- | FD094 | MF |
| TOP RACING | 50 | 99- | FD094 | MF |
| MAT | 100 | 99- | FD094 | MF |
| TOP RACING | 100 | 99- | FD094 | MF |
| **SUMCO** | | | | |
| DINGO DG 110 | 110 | 06- | FD094 | MF |
| **SUZUKI** | | | | |
| AH 50 ADDRESS | 50 | 94- | FD094 | MF301 |
| AJ ZZ SEPIA | 50 | 93- | FD094 | MF301 |
| ZZ 50 | 50 | 94- | FD094 | MF301 |
| AH 80 ADDRESS | 80 | 92- | FD094 | MF301 |
| CP ADRRESS | 80 | 92- | FD094 | MF301 |
| AH 100 ADDRESS | 100 | 94-94 | FD094 | MF641 |
| ADDRESS 110 | 110 | 15- | FD094 | MF |
| UE 125 | 125 | 01- | FD094 | MF |
| **TGB** | | | | |
| 303 R | 50 | 99- | FD094 | MF641 |
| 409 F | 50 | 00-05 | FD094 | MF641 |
| AKROS 50 | 50 | 95-98 | FD094 | MF |
| ERGON | 50 | 94- | FD094 | MF |
| SUNSET 50 | 50 | 07- | FD094 | MF |
| 303 R | 125 | 99- | FD094 | MF |
| 409 F | 125 | 02-05 | FD094 | MF |
| **ZERO** | | | | |
| ZERO DS | EL | 10-12 | FD188 | FD094 |
| ZERO MX | EL | 10-12 | FD188 | FD094 |
| ZERO S | EL | 10-12 | FD188 | FD094 |
| ZERO X | EL | 10- | FD188 | FD094 |
| ZERO XU | EL | 10-12 | FD188 | FD094 |

## FD 095

mm: 41,5 x 45,3 | A | A | 7,7

G1054 | G1050 | G1805 | G1396 | G1397

| BRAND MARCA | MODEL MODELO | C.C. | YEAR | FRONT | REAR |
|---|---|---|---|---|---|
| **BENELLI** | | | | | |
| QUATTRO NOVE X | | 50 | 09- | FD095 | MF |
| **CCM** | | | | | |
| C-XR 125 E | | 125 | 08- | FD073 | FD095 |
| **DAELIM** | | | | | |
| DELFINO | | 100 | 03- | FD095 | MF |
| AVANCE II | | 125 | 98- | FD095 | MF |
| B-BONE | | 125 | 08- | FD222 | FD095 |
| HISTORY | | 125 | 02- | FD095 | FD095 |
| NS 125 | | 125 | 98-99 | FD095 | MF |
| NS 125 DXL | | 125 | 02- | FD095 | FD095 |
| NS 125 II | | 125 | 00-00 | FD095 | MF |
| NS 125 III | | 125 | 01-01 | FD095 | MF |
| OTELO f.i. | | 125 | 08- | FD222 | FD095 |
| S2 125 FREEWING | | 125 | 06-07 | FD140 | FD095 |
| S2 125 FREEWING f.i. | | 125 | 08- | FD222 | FD095 |
| VS 125 | | 125 | 98- | FD095 | MF |
| **DORTON** | | | | | |
| MAXI URBAN 125 | | 125 | 06- | FD095 | MF |
| **HONDA** | | | | | |
| MG 50 MAGNA | | 50 | 02- | FD095 | MF003 |
| CRM 75 R | | 75 | 90-92 | FD095 | MF002 |
| CG 125 | | 125 | 04- | FD095 | MF |
| **KAWASAKI** | | | | | |
| KSR 110 | | 110 | 03- | FD095 | FD095 |
| ELIMINATOR | | 125 | 98-99 | FD095 | MF151 |
| KLX 125 D-TRACKER | | 125 | 10- | FD086 | FD095 |
| **KAWASAKI INDONESIA** | | | | | |
| KSR 110 | | 110 | 11- | FD095 | FD095 |
| **KAWASAKI MALASIA** | | | | | |
| KSR 110 | | 110 | 11- | FD095 | FD095 |
| **KREIDLER** | | | | | |
| ENDURO 125 DD | | 125 | 08- | FD086 | FD095 |
| G 125 FLORETT | | 125 | 08- | FD095 | MF |

| | | | | |
|---|---|---|---|---|
| SUPERMOTO 125 DD | 125 | 08- | FD086 | FD095 |
| **LANVERTTI** | | | | |
| NEON 125 | 125 | 06- | FD095 | MF |
| **MONKEY BIKE** | | | | |
| MB OCTOPUS 125 | 125 | 06- | FD095 | MF |
| **PEUGEOT** | | | | |
| NEW VIVACITY 50 | 50 | 08- | FD095 | MF |
| NEW VIVACITY 125 SIXTIES | 125 | 10- | FD095 | MF |
| SUM-UP | 125 | 08- | FD095 | MF451 |
| **RIEJU** | | | | |
| PACIFIC | 50 | 07- | FD095 | MF |
| TOREO | 50 | 08- | FD095 | MF |
| PACIFIC | 125 | 07- | FD095 | MF |
| **SACHS** | | | | |
| MAD ASS 125 | 125 | 05- | FD133 | FD095 |
| **VENTO** | | | | |
| TRITON r4 | 100 | 06- | FD095 | MF |
| WORKMAN | 125 | 06- | FD095 | MF |

## FD 097

mm: 82,7 x 21,9 | A | A | 7,3

G1054 | G1050 | G1805 |

| BRAND MARCA | MODEL MODELO | C.C. | YEAR | FRONT | REAR |
|---|---|---|---|---|---|
| **YAMAHA** | | | | | |
| TT R 125 | | 125 | 00- | FD097 | MF630 |
| **YAMAHA BRASIL** | | | | | |
| TT R 125 | | 125 | 08- | FD097 | MF |

## FD 099

mm: 69,9 x 54,4 | A | A | 8,5

G1054 | G1370 | G1375 |

| BRAND MARCA | MODEL MODELO | C.C. | YEAR | FRONT | REAR |
|---|---|---|---|---|---|
| **YAMAHA** | | | | | |
| TZ 125 GP | | 125 | 94- | FD099 | FD163 |
| TZR 125 | | 125 | 92- | FD099 | FD069 |

## FD 102

mm: 75,0 x 40,0 | A | A | 6,3

G1054 | G1805 |

| BRAND MARCA | MODEL MODELO | C.C. | YEAR | FRONT | REAR |
|---|---|---|---|---|---|
| **BETA** | | | | | |
| ALP 50 | | 50 | 94- | FD065 | FD102 |
| ST 50 | | 50 | 94- | FD065 | FD102 |
| ZERO 50 | | 50 | 94- | FD065 | FD102 |

## FD 103

mm: 86,0 x 36,7 | A | A[1] | 10,6

G1054 | G1805 | G1371 |

| BRAND MARCA | MODEL MODELO | C.C. | YEAR | FRONT | REAR |
|---|---|---|---|---|---|
| **HONDA** | | | | | |
| MSX 125 | | 125 | 13- | FD298 | FD103 |
| PANTHEON 125 | | 125 | 03- | FD207 | FD103 |
| **KREIDLER** | | | | | |
| NAKED 125 DD LEFT/IZQ. | | 125 | 08- | FD117 | FD103 |

## FD 107

mm: 69,7 x 46,0 | A | A | 8,5

G1054 | G1370 | G1375 | G1003 | G1300

| BRAND MARCA | MODEL MODELO | C.C. | YEAR | FRONT | REAR |
|---|---|---|---|---|---|
| **SUZUKI** | | | | | |
| RG 125 F | | 125 | 93-97 | FD107 | FD120 |

## FD 113

mm: 52,0 x 36,6 | A | A | 8,3

G1054 | G1050 |

| BRAND MARCA | MODEL MODELO | C.C. | YEAR | FRONT | REAR |
|---|---|---|---|---|---|
| **HONDA** | | | | | |
| RS 125 R | | 125 | 90-92 | FD266 | FD113 |
| RS 125 R | | 125 | 93- | FD068 | FD113 |
| **SYM** | | | | | |
| CINDERELLA | | 50 | 99- | FD113 | MF |
| DD 50 | | 50 | 04- | FD113 | MF |
| MIO 50 | | 50 | 06- | FD113 | MF |
| DD 100 | | 100 | 04- | FD113 | MF |
| MIO 100 | | 100 | 06- | FD113 | MF |
| WOO | | EL | 11- | FD113 | MF002 |

## FD 114

mm: 62,0 x 40,6 | A | A | 9,5

G1054 | G1805 | G1396 |

| BRAND MARCA | MODEL MODELO | C.C. | YEAR | FRONT | REAR |
|---|---|---|---|---|---|
| **KAWASAKI** | | | | | |
| KDX 125 SR | | 125 | 90- | FD094 | FD114 |
| **SUZUKI** | | | | | |
| DR 80 BIG | | 80 | 91- | FD090 | FD114 |
| TS 125 R | | 125 | 90- | FD086 | FD114 |
| **YAMAHA** | | | | | |
| DT 125 R | | 125 | 05- | FD079 | FD114 |
| DT 125 X | | 125 | 05- | FD172 | FD114 |

## FD 117

mm: 77,4 x 42,3 | A | B | 7,7

mm: 98,8 x 42,4 | A | B | 7,5

G1054 | G1050 | G1805 | G1370 | G1397

| BRAND MARCA | MODEL MODELO | C.C. | YEAR | FRONT | REAR |
|---|---|---|---|---|---|
| **DAELIM** | | | | | |
| DELFINO 125 | | 125 | 08- | FD117 | MF |
| **KAWASAKI** | | | | | |
| ELIMINATOR | | 125 | 00- | FD117 | MF151 |
| **KAWASAKI INDONESIA** | | | | | |
| EDGE R | | 110 | 12- | FD117 | MF |
| EDGE VR | | 110 | 12- | FD117 | MF |
| ATHLETE | | 125 | 12- | FD117 | FD117 |
| **KREIDLER** | | | | | |
| NAKED 125 DD LEFT/IZQ. | | 125 | 08- | FD117 | FD103 |
| **KYMCO** | | | | | |



For other models years previous to 1990 visit **www.galferonline.es** · Para otros modelos anteriores al año 1990 visitar **www.galferonline.es**
For consult TÜV (ABE) type approvals visit **www.galfermoto.com --> DOWNLOAD --> TÜV CERTIFICATIONS** · Para consultar las homologaciones TÜV (ABE) visitar **www.galfermoto.com --> DESCARGAS --> CERTIFICACIONES TÜV**

| | | | | |
|---|---|---|---|---|
| K - PIPE | 50 | 12- | FD117 | MF |
| K-PIPE | 125 | 12- | FD117 | MF |
| **MBK MOTOBEKANE** | | | | |
| X-POWER | 50 | 99-02 | FD117 | FD079 |
| **SUZUKI** | | | | |
| ADDRESS 125 | 125 | 09- | FD117 | MF |
| RGV 125 WATER COOLED | 125 | 98- | FD117 | MF |
| UH 125 BURGMAN | 125 | 14- | FD117 | FD315 |
| UH 125 BURGMAN ABS | 125 | 14- | FD117 | FD315 |
| **SUZUKI INDONESIA** | | | | |
| SMASH 110 | 110 | 10- | FD117 | MF |
| ARASHI 125 | 125 | 10- | FD117 | MF |
| SHOGUN 125 | 125 | 09- | FD117 | MF |
| SHOGUN FD 125 | 125 | 09- | FD117 | FD259 |
| SHOGUN FI 125 | 125 | 09- | FD117 | FD259 |
| SHOGUN RR 125 | 125 | 09- | FD117 | FD259 |
| SHOGUN SP125 | 125 | 09- | FD117 | FD259 |
| SKYWAVE 125 | 125 | 10- | FD117 | MF |
| **SUZUKI MALASIA** | | | | |
| SMASH REVO 110 | 110 | 10- | FD117 | MF |
| SHOGUN RR 125 | 125 | 09- | FD117 | FD259 |
| SHOGUN SP125 | 125 | 09- | FD117 | FD259 |
| **YAMAHA** | | | | |
| TZR 50 RR | 50 | 97-02 | FD117 | FD079 |
| TZR 80 RR | 80 | 92- | FD117 | FD079 |

## FD 118

mm: 67,4 x 50,7 | 7,0 | A | A

G1054 | G1050 | G1370

| BRAND MARCA | MODEL MODELO | C.C. | YEAR | FRONT | REAR |
|---|---|---|---|---|---|
| **APRILIA** | | | | | |
| AF 1 125 FUTURA | | 125 | 90- | FD118 | FD012 |
| EUROPA 125 | | 125 | 91- | FD118 | FD012 |
| PEGASO 125 KAT | | 125 | 93- | FD118 | FD170 |
| RS 125 EXTREMA, REPLICA | | 125 | 92-05 | FD118 | FD170 |
| SPORT PROT 125 | | 125 | 92-94 | FD118 | FD170 |
| TUONO 125 | | 125 | 03- | FD118 | FD153 |
| **CAGIVA** | | | | | |
| STRADA PRIMA 50 | | 50 | 92- | FD118 | FD048 |
| **GILERA-PIAGGIO** | | | | | |
| 125 CRONO AE | | 125 | 91- | FD118 | FD012 |
| 125 CX, AE | | 125 | 91- | FD118 | FD012 |
| 125 FREESTYLE | | 125 | 92- | FD118 | FD012 |
| 125 GFR | | 125 | 93-94 | FD118 | FD012 |
| 125 SPO2 | | 125 | 90- | FD118 | FD012 |

## FD 119

mm: 99,6 x 52,0 | 8,0 | A | A

G1054

| BRAND MARCA | MODEL MODELO | C.C. | YEAR | FRONT | REAR |
|---|---|---|---|---|---|
| **CAGIVA** | | | | | |
| SUPER CITY 125 | | 125 | 91- | FD119 | FD012 |

## FD 120

mm: 83,0 x 47,6 | 9,6 | A | B

mm: 99,1 x 44,0 | 7,4 | A | B

G1054 | G1805

| BRAND MARCA | MODEL MODELO | C.C. | YEAR | FRONT | REAR |
|---|---|---|---|---|---|
| **SUZUKI** | | | | | |
| RG 125 F | | 125 | 93-97 | FD107 | FD120 |

## FD 133

mm: 76,8 x 41,8 | 7,4 | A | A

G1054 | G1050 | G1805 | G1380

| BRAND MARCA | MODEL MODELO | C.C. | YEAR | FRONT | REAR |
|---|---|---|---|---|---|
| **APRILIA** | | | | | |
| RX 50 | | 50 | 92-92 | FD133 | FD048 |
| PEGASO 125 | | 125 | 91-92 | FD133 | FD135 |
| RED ROSE 125 AE | | 125 | 91- | FD133 | FD012 |
| RX 125 | | 125 | 92-92 | FD133 | FD075 |
| TUAREG RALLY 125 | | 125 | 91- | FD133 | FD135 |
| **BETA** | | | | | |
| RK6 50 | | 50 | 94-98 | FD133 | FD065 |
| RR-T | | 50 | 99-01 | FD133 | FD065 |
| **BULTACO** | | | | | |
| ASTRO | | 50 | 00- | FD133 | FD065 |
| LOBITO | | 50 | 99- | FD133 | FD065 |
| **CH RACING** | | | | | |
| WSM 50 MOTARD | | 50 | 05- | FD133 | FD065 |
| WXE 50 ENDURO | | 50 | 05- | FD133 | FD065 |
| WXE 125 ENDURO | | 125 | 05- | FD133 | FD065 |
| **DERBI** | | | | | |
| GPR 50 R | | 50 | 97-03 | FD133 | FD065 |
| **GAS GAS** | | | | | |
| EC ROOKIE | | 50 | 01- | FD133 | FD225 |
| SM ROOKIE | | 50 | 01-04 | FD133 | FD225 |
| **GILERA-PIAGGIO** | | | | | |
| GP 50 | | 50 | 02- | FD133 | FD065 |
| GPR 50 POGGIALI REPLICA | | 50 | 03- | FD133 | FD065 |
| **JINCHENG** | | | | | |
| VELOS | | 50 | 05- | FD133 | MF |
| **MOTORHISPANIA** | | | | | |
| RX RACING | | 50 | 99- | FD133 | FD065 |
| RYZ PRO ENDURO | | 50 | 09- | FD133 | FD065 |
| RYZ PRO SM | | 50 | 09- | FD133 | FD065 |
| RYZ SM | | 50 | 99-04 | FD133 | FD065 |
| RYZ SM | | 50 | 05- | FD133 | FD065 |
| URBAN BIKE | | 50 | 04- | FD133 | FD065 |
| ARENA MOTARD | | 125 | 05- | FD133 | FD065 |
| **PEUGEOT** | | | | | |
| XR 6 | | 50 | 05- | FD133 | FD065 |
| **RIEJU** | | | | | |
| RR 50 CASTROL | | 50 | 99- | FD133 | FD065 |
| MXR 125 4T | | 125 | 03- | FD133 | FD065 |
| SMX 125 4T | | 125 | 03-07 | FD133 | FD065 |
| **SACHS** | | | | | |
| MAD ASS 50 | | 50 | 05- | FD133 | |
| MAD ASS 125 | | 125 | 05- | FD133 | FD095 |
| **SHERCO** | | | | | |
| 50 IPONE LIMITED | | 50 | 05- | FD133 | FD065 |
| CITYCORP 125 | | 125 | 03- | FD133 | FD065 |
| CITYCORP 125 SM | | 125 | 03- | FD133 | FD065 |
| **TOMOS** | | | | | |
| 50 SE | | 50 | 04- | FD133 | FD065 |
| 125 SE | | 125 | 04- | FD133 | FD065 |

## FD 135

mm: 56,3 x 34,7 | 10,5 | A | B

mm: 85,0 x 42,1 | 7,8 | A | B

G1054 | G1050

| BRAND MARCA | MODEL MODELO | C.C. | YEAR | FRONT | REAR |
|---|---|---|---|---|---|
| **APRILIA** | | | | | |
| PEGASO 125 | | 125 | 91-92 | FD133 | FD135 |
| RX 125 | | 125 | 91-91 | FD089 | FD135 |
| RX 125 | | 125 | 95- | FD162 | FD135 |
| RX 125 | | 125 | 08- | FD138 | FD135 |
| TUAREG RALLY 125 | | 125 | 91- | FD133 | FD135 |
| **FANTIC** | | | | | |
| GRINTA | | 50 | 97- | FD136 | FD135 |
| LEADER 50 | | 50 | 95- | FD136 | FD135 |
| **GILERA-PIAGGIO** | | | | | |
| EAGLET, 6V | | 50 | 96- | FD152 | FD135 |
| RUNNER 50 SP | | 50 | 05-05 | FD135 | FD200 |
| **MALAGUTI** | | | | | |
| 50 MGX | | 50 | 94- | FD135 | MF |
| F10 | | 50 | 91- | FD135 | MF630 |
| 80 F10 | | 80 | 92- | FD135 | MF |
| **MOTRON** | | | | | |
| RZ | | 50 | 94- | FD135 | MF |
| **SACHS** | | | | | |
| X ROAD 125 | | 125 | 04- | FD068 | FD135 |
| **SCARABEO** | | | | | |
| 50 2T | | 50 | 14- | FD135 | MF630 |
| 50 4T | | 50 | 14- | FD135 | MF630 |
| 100 4T | | 100 | 14- | FD135 | MF630 |

## FD 136

mm: 61,0 x 27,3 | 7,3 | A | A

G1054 | G1050

| BRAND MARCA | MODEL MODELO | C.C. | YEAR | FRONT | REAR |
|---|---|---|---|---|---|
| **ADLY** | | | | | |
| CAT 50 | | 50 | 06- | FD136 | MF453 |
| JET 50 | | 50 | 06- | FD136 | MF453 |
| PISTA 50 | | 50 | 05- | FD136 | MF453 |
| ROAD RACER 50 | | 50 | 04- | FD136 | MF453 |
| PISTA 70 | | 70 | 05- | FD136 | MF453 |
| ROAD RACER 90 | | 90 | 04- | FD136 | MF453 |
| CAT 100 | | 100 | 06- | FD136 | MF453 |
| JET 100 | | 100 | 06- | FD136 | MF453 |
| ROAD RACER 100 | | 100 | 04- | FD136 | MF453 |
| CAT 125 | | 125 | 06- | FD136 | MF453 |
| **AEON** | | | | | |
| X FAST | | 50 | 04- | FD136 | MF |
| X FAST | | 110 | 04- | FD136 | MF |
| **FANTIC** | | | | | |
| GRINTA | | 50 | 97- | FD136 | FD135 |
| LEADER 50 | | 50 | 95- | FD136 | FD135 |
| **GARELLI** | | | | | |
| 50 BIG RACING | | 50 | 94- | FD136 | MF |
| 50 BIG WHEELS | | 50 | 94- | FD136 | FD071 |
| 50 PONY, SR | | 50 | 94- | FD136 | FD071 |
| **ITALJET** | | | | | |
| 50 CRUISE | | 50 | 94- | FD136 | MF732 |
| 50 PISTA | | 50 | 94- | FD136 | MF732 |
| 50 SCOOP | | 50 | 94- | FD136 | MF732 |
| BAZOOKA | | 50 | 94- | FD136 | MF732 |
| PISTA 2 | | 50 | 92- | FD136 | MF732 |
| YANKEE | | 50 | 94- | FD136 | MF |
| **JINCHENG** | | | | | |
| JC 50 Q 5 | | 50 | 05- | FD136 | MF |

| | | | | |
|---|---|---|---|---|
| JC 50 Q 9 | 50 | 05- | FD136 | MF |
| JC 70 Q 5 | 70 | 05- | FD136 | MF |
| JC 90-7 GORILLA | 90 | 05- | FD136 | MF |
| **MBK MOTOBEKANE** | | | | |
| TARGET | 50 | 92- | FD136 | MF458 |
| BOOSTER | 100 | 00- | FD136 | MF640 |
| **MONKEY BIKE** | | | | |
| MB 50 D | 50 | 06- | FD136 | MF |
| MB 50 G | 50 | 06- | FD136 | MF |
| MB 50 R | 50 | 06- | FD136 | MF |
| MB 90 R | 90 | 06- | FD136 | MF |
| MB 110 D | 110 | 06- | FD136 | MF |
| MB 110 G | 110 | 06- | FD136 | MF |
| MB 110 M | 110 | 06- | FD136 | MF |
| **P.G.O.** | | | | |
| BIG MAX 50 | 50 | 95- | FD136 | MF641 |
| PMX | 50 | 99- | FD136 | MF641 |
| BIG MAX 80 | 80 | 95- | FD136 | MF609 |
| BIG MAX 90 | 90 | 95- | FD136 | MF641 |
| **PEUGEOT** | | | | |
| V-CLIC 50 | 50 | 08- | FD136 | MF002 |
| MAT | 50 | 99- | FD136 | MF |
| **UVM** | | | | |
| BINGO 50 | 50 | 99- | FD136 | MF |
| BINGO 125 | 125 | 99- | FD136 | MF |
| **VILLA** | | | | |
| 50 AX | 50 | 93- | FD136 | MF |
| **YAMAHA** | | | | |
| CR 50 TARGET | 50 | 91- | FD136 | MF458 |
| CR 50 Z | 50 | 94- | FD136 | MF458 |
| JOG | 50 | 92-93 | FD136 | MF630 |
| JOG R | 50 | 94-01 | FD136 | MF630 |
| TARGET | 50 | 94- | FD136 | MF458 |
| CR 90 TARGET | 90 | 91- | FD136 | MF458 |
| JOG 90 | 90 | 90- | FD136 | MF453 |

## FD 138

mm: 94,0 x 36,7 | 7,6 | A | A1

G1054 | G1050 | G1805 | G1370-80 | G1396

| BRAND MARCA | MODEL MODELO | C.C. | YEAR | FRONT | REAR |
|---|---|---|---|---|---|
| **APRILIA** | | | | | |
| RX 125 | | 125 | 08- | FD138 | FD135 |
| RX 125 (AJP) | | 125 | 08- | FD138 | FD252 |
| **HUSQVARNA** | | | | | |
| E-go | | EL | 12- | FD138 | FD441 |
| **KEEWAY** | | | | | |
| SILVER BLADE 125 | | 125 | 07- | FD138 | FD220 |
| **MBK MOTOBEKANE** | | | | | |
| SKYLINER | | 125 | 99-00 | FD138 | MF640 |
| SKYLINER | | 125 | 01- | FD138 | FD220 |
| THUNDER | | 125 | 01- | FD138 | FD220 |
| **SUZUKI** | | | | | |
| UH 125 BURGMAN | | 125 | 02-06 | FD138 | FD220 |
| T-RACE | | | | | |
| T-RACE C | | EL | 15- | FD138 | FD286 |
| T-RACE DIABOLICA | | EL | 15- | FD138 | FD291 |
| T-RACE E | | EL | 15- | FD138 | FD286 |
| T-RACE R | | EL | 15- | FD138 | FD286 |
| **VECTRIX** | | | | | |
| VECTRIX ELECTRIC 3W | | EL | 07- | FD065 | FD138 |
| VECTRIX ELECTRICA | | EL | 06- | FD138 | FD138 |
| **YAMAHA** | | | | | |
| MAXTER 125 | | 125 | 01- | FD138 | FD220 |
| SP 125 MAGESTY | | 125 | 98-00 | FD138 | MF640 |
| SP 125 MAGESTY | | 125 | 01- | FD138 | FD220 |
| YZF 125 R | | 125 | 08- | FD138 | FD336 |

## FD 140

mm: 102,1 x 38,7 | 9,8 | A | A1

G1054 | G1050 | G1370

| BRAND MARCA | MODEL MODELO | C.C. | YEAR | FRONT | REAR |
|---|---|---|---|---|---|
| **DAELIM** | | | | | |
| DAYSTAR 125 | | 125 | 00- | FD140 | MF |
| DAYSTAR VL 125Z F1 PLUS | | 125 | 14- | FD140 | FD145 |
| ROADWIN | | 125 | 03-10 | FD140 | FD145 |
| ROADWIN 125 R f.i | | 125 | 11- | FD140 | FD145 |
| S2 125 FREEWING | | 125 | 06-07 | FD140 | FD095 |
| VL DAYSTAR 125 | | 125 | 02- | FD140 | MF |
| VT/VS CUSTOM | | 125 | 98- | FD140 | MF |
| **MBK MOTOBEKANE** | | | | | |
| SKYCRUISER | | 125 | 10- | FD140 | FD220 |
| SKYCRUISER ABS | | 125 | 11- | FD140 | FD214 |
| **YAMAHA** | | | | | |
| SP 125 MAGESTY (TAIWAN) | | 125 | 99- | FD140 | MF |
| X - CITY | | 125 | 09- | FD140 | FD220 |

## FD 144

mm: 75,2 x 36,1 | 8,9 | A | A1

G1054 | G1050

| BRAND MARCA | MODEL MODELO | C.C. | YEAR | FRONT | REAR |
|---|---|---|---|---|---|
| **DAELIM** | | | | | |
| BESBI | | 125 | 08- | FD144 | MF |
| **HONDA** | | | | | |
| DREAM 50 | | 50 | 01- | FD145 | FD144 |
| NS1 50 REPLICA | | 50 | 96- | FD145 | FD144 |
| SRX 50 SHADOW | | 50 | 97- | FD144 | MF002 |
| XR 50 MOTARD | | 50 | 05- | FD145 | FD144 |
| NS1, REPLICA | | 75 | 92- | FD145 | FD144 |
| NH 90 YUPI | | 90 | 91- | FD144 | MF002 |
| SRX 90 SHADOW | | 90 | 97- | FD144 | MF002 |
| XR 100 MOTARD | | 100 | 05- | FD145 | FD144 |
| **KYMCO** | | | | | |
| FEVER ZX 50 | | 50 | 97- | FD144 | MF001 |
| FILLY 50 | | 50 | 00- | FD144 | MF002 |
| KB 50 | | 50 | 95- | FD144 | MF002 |
| SCOUT 50 | | 50 | 99- | FD144 | MF002 |
| SOONER | | 50 | 03- | FD144 | MF |
| TB 50 OFF | | 50 | 99- | FD144 | MF |
| TOP BOY 50 | | 50 | 97- | FD144 | MF |
| YUP | | 50 | 02-03 | FD144 | MF |
| ZX 50 | | 50 | 99- | FD144 | MF |
| TOP BOY 100 | | 100 | 98- | FD144 | MF |
| **PEUGEOT** | | | | | |
| SV 50 GEO | | 50 | 93- | FD144 | MF002 |
| SV EXECUTIVE/GEO | | 125 | 95- | FD144 | MF002 |

## FD 145

mm: 77,4 x 42,3 | 9,2 | A | B

mm: 98,8 x 42,3 | 9,2 | A | B

G1054 | G1050 | G1380

| BRAND MARCA | MODEL MODELO | C.C. | YEAR | FRONT | REAR |
|---|---|---|---|---|---|
| **CCM** | | | | | |
| TL 125 | | 125 | 08- | FD073 | FD145 |
| **CSR** | | | | | |
| MAX | | 125 | 09- | FD145 | FD145 |
| **DAELIM** | | | | | |
| CITI ACE 110 | | 110 | 06- | FD145 | MF |
| DAYSTAR VL 125Z F1 PLUS | | 125 | 14- | FD140 | FD145 |
| ROADWIN | | 125 | 03-10 | FD140 | FD145 |
| ROADWIN 125 R f.i | | 125 | 11- | FD140 | FD145 |
| S3 125 Fi | | 125 | 11- | FD275 | FD145 |
| **HONDA** | | | | | |
| DREAM 50 | | 50 | 01- | FD145 | FD144 |
| NS1 50 REPLICA | | 50 | 96- | FD145 | FD144 |
| XR 50 MOTARD | | 50 | 05- | FD145 | FD144 |
| NS1, REPLICA | | 75 | 92- | FD145 | FD144 |
| NSF 100 | | 100 | 07- | FD145 | FD093 |
| XR 100 MOTARD | | 100 | 05- | FD145 | FD144 |
| VT 125 SHADOW | | 125 | 00- | FD145 | MF005 |
| XL 125 V VARADERO | | 125 | 01- | FD145 | FD259 |
| **HONDA INDONESIA** | | | | | |
| REVO 100 | | 100 | 10- | FD145 | MF |
| CITY SPORT ONE | | 125 | 11- | FD145 | FD259 |
| **HYOSUNG** | | | | | |
| GEN 4.0 | | EL | 10- | FD145 | FD145 |
| **KAWASAKI** | | | | | |
| BN 125 | | 125 | 05- | FD145 | MF |
| **KYMCO** | | | | | |
| ACTIV 50 | | 50 | 04- | FD145 | MF |
| BET & WIN 50 | | 50 | 01- | FD145 | FD145 |
| DINK 50 | | 50 | 00- | FD145 | MF |
| GRAND DINK 50 | | 50 | 04- | FD145 | MF |
| JETIX | | 50 | 09- | FD073 | FD145 |
| KYMCOSENTO 50 | | 50 | 13- | FD145 | MF002 |
| NEWSENTO 50 | | 50 | 13- | FD145 | MF002 |
| NEXXON 50 | | 50 | 07-08 | FD063 | FD145 |
| SUPER 9 | | 50 | 00- | FD145 | FD261 |
| YAGER | | 50 | 07- | FD145 | MF |
| ACTIV 110 | | 110 | 04- | FD145 | MF |
| AXR 110 | | 110 | 04- | FD145 | MF |
| ACTIV 125 | | 125 | 04- | FD145 | MF |
| BET & WIN 125 | | 125 | 00- | FD145 | FD145 |
| DINK 125 | | 125 | 97- | FD145 | FD145 |
| GRAND DINK 125 | | 125 | 02- | FD145 | FD145 |
| HIPSER 125 | | 125 | 00- | FD145 | MF |
| JETIX | | 125 | 10- | FD073 | FD145 |
| LIKE | | 125 | 09- | FD187 | FD145 |
| NEXXON 125 | | 125 | 07-08 | FD063 | FD145 |
| QUANNON 125 | | 125 | 07- | FD145 | FD145 |
| QUANNON NAKED 125 | | 125 | 09- | FD145 | FD145 |
| SPIKE | | 125 | 04- | FD145 | FD145 |
| STRAIGHT 125 | | 125 | 05-06 | FD145 | MF |
| STRAIGHT 125 | | 125 | 07- | FD063 | FD145 |
| SUPER 9 | | 125 | 00- | FD145 | FD261 |
| YAGER 125 | | 125 | 07-08 | FD145 | FD145 |
| YAGER GT 125 | | 125 | 09-12 | FD145 | FD145 |
| ZING | | 125 | 00- | FD145 | MF |
| **LONCIN** | | | | | |
| LX 110 | | 110 | 02- | FD145 | MF |
| LX 125 | | 125 | 02- | FD145 | MF |
| **MODENAS** | | | | | |
| KRISS 115 | | 115 | 99- | FD145 | MF |
| **P.G.O.** | | | | | |
| G-MAX | | 125 | 05- | FD068 | FD145 |
| STAR 125 | | 125 | 95- | FD145 | FD012 |
| **SUZUKI** | | | | | |
| SHOGUN R | | 125 | 05- | FD145 | MF |
| **SYM** | | | | | |
| X PRO 50 | | 50 | 13- | FD145 | MF002 |
| RS 125 | | 125 | 04- | FD412 | FD145 |
| X PRO 125 | | 125 | 13- | FD145 | MF002 |
| XS 125 K | | 125 | 07- | FD145 | MF |



For other models years previous to 1990 visit **www.galferonline.es** - Para otros modelos anteriores al año 1990 visitar **www.galferonline.es**
For consult TÜV (ABE) type approvals visit **www.galfermoto.com --> DOWNLOAD --> TÜV CERTIFICATIONS** - Para consultar las homologaciones TÜV (ABE) visitar **www.galfermoto.com --> DESCARGAS --> CERTIFICACIONES TÜV**

## FD 147

mm 75,2 x 36,1 | 7,0 | A | A[1]

G1054 | G1050 |

| BRAND MARCA | MODEL MODELO | C.C. | YEAR | FRONT | REAR |
|---|---|---|---|---|---|
| **PEUGEOT** | | | | | |
| SV 50 D, SPORT, T | | 50 | 94- | FD147 | MF002 |
| SV 50 GEO | | 50 | 92-92 | FD147 | MF002 |
| ZENITH | | 50 | 94-94 | FD147 | MF002 |
| ZENITH 50 | | 50 | 93-93 | FD147 | MF002 |
| GEO SV | | 125 | 92- | FD147 | MF002 |
| SV EXECUTIVE/GEO | | 125 | 91-94 | FD147 | MF002 |

## FD 149

mm 40,9 x 43,0 | 7,7 | A | A

G1054 | G1050 |

| BRAND MARCA | MODEL MODELO | C.C. | YEAR | FRONT | REAR |
|---|---|---|---|---|---|
| **CAGIVA** | | | | | |
| CITY 50 | | 50 | 93- | FD149 | MF630 |
| **DAELIM** | | | | | |
| BONITA 50 | | 50 | 09- | FD149 | MF |
| CORDI | | 50 | 04- | FD149 | MF |
| E-FIVE | | 50 | 03- | FD149 | MF |
| MESSAGE 50 | | 50 | 98- | FD149 | MF |
| S-FIVE 50 | | 50 | 01- | FD149 | MF |
| **HONDA** | | | | | |
| DIO 50 | | 50 | 91-93 | FD149 | MF001 |
| DIO ZX 50 | | 50 | 94- | FD149 | MF001 |
| GP 50 DIO | | 50 | 92- | FD149 | MF001 |
| HSC 01-ZR | | 50 | 94- | FD149 | MF001 |
| **SYM** | | | | | |
| CHA CHA | | 50 | 99- | FD149 | MF |
| SUPER FANCY | | 50 | 99- | FD149 | MF |

## FD 151

mm 55,5 x 46,2 | 7,0 | A | A

G1054 | G1050 | G1805 |

| BRAND MARCA | MODEL MODELO | C.C. | YEAR | FRONT | REAR |
|---|---|---|---|---|---|
| **CAGIVA** | | | | | |
| PRIMA 50 | | 50 | 92- | FD151 | FD152 |
| SUPER CITY 50 | | 50 | 92- | FD151 | FD152 |
| PRIMA 75 | | 75 | 92- | FD151 | FD152 |
| SUPER CITY 80 | | 80 | 92- | FD151 | FD152 |

## FD 152

mm 31,8 x 51,2 | 5,5 | A | A

G1054 | G1050 |

| BRAND MARCA | MODEL MODELO | C.C. | YEAR | FRONT | REAR |
|---|---|---|---|---|---|
| **CAGIVA** | | | | | |
| PRIMA 50 | | 50 | 92- | FD151 | FD152 |
| SUPER CITY 50 | | 50 | 92- | FD151 | FD152 |
| PRIMA 75 | | 75 | 92- | FD151 | FD152 |
| SUPER CITY 80 | | 80 | 92- | FD151 | FD152 |
| **GILERA-PIAGGIO** | | | | | |
| EAGLET, 6V | | 50 | 96- | FD152 | FD135 |
| **MALAGUTI** | | | | | |
| 50 CENTRO SL | | 50 | 94- | FD152 | MF630 |
| F 15 FIRE FOX LC | | 50 | 98- | FD084 | FD152 |
| **PIAGGIO** | | | | | |
| 50 VESPINO F9 FAST RIDER | | 50 | 93- | FD152 | MF |
| FREE 50 | | 50 | 96- | FD152 | MF631 |
| QUARTZ | | 50 | 92- | FD152 | MF621 |
| SKIPPER | | 125 | 93-97 | FD152 | MF636 |

## FD 153

mm 39,7 x 49,5 | 6,5 | A | A

G1054 | G1050 | G1380 |

| BRAND MARCA | MODEL MODELO | C.C. | YEAR | FRONT | REAR |
|---|---|---|---|---|---|
| **APRILIA** | | | | | |
| AMICO 50 GL,GLE,LX,SPORT LIFE,LX | | 50 | 92- | FD153 | MF630 |
| AREA 51 | | 50 | 98- | FD153 | FD153 |
| COMPAY | | 50 | 02- | FD153 | MF723 |
| GULLIVER 50 | | 50 | 95-95 | FD153 | MF630 |
| GULLIVER 50 LC | | 50 | 96-97 | FD153 | MF630 |
| HABANA | | 50 | 98-01 | FD153 | MF723 |
| HABANA CUSTOM | | 50 | 98-01 | FD153 | MF723 |
| Mc GULLIVER 50 | | 50 | 98- | FD153 | MF630 |
| MOJITO 50 | | 50 | 02- | FD153 | MF723 |
| RALLY 50 | | 50 | 94-95 | FD153 | MF630 |
| RALLY 50 LC | | 50 | 96- | FD153 | FD153 |
| RS 50 | | 50 | 96-98 | FD153 | FD048 |
| RS 50, ROSSI REPLICA | | 50 | 98-98 | FD153 | FD048 |
| SCARABEO 50 | | 50 | 96-97 | FD153 | MF639 |
| SCARABEO de LUXE 50 | | 50 | 98-01 | FD153 | FD153 |
| SCARABEO DITECH 50 | | 50 | 02- | FD153 | FD228 |
| SONIC | | 50 | 98- | FD153 | MF630 |
| SONIC GP | | 50 | 98- | FD153 | MF630 |
| SPICE SONIC GP | | 50 | 98- | FD153 | MF630 |
| SR 50 | | 50 | 93-93 | FD153 | MF630 |
| SR 50 ACQUA | | 50 | 95-96 | FD153 | MF630 |
| SR 50 FACTORY | | 50 | 05- | FD153 | FD228 |
| SR 50 R | | 50 | 05- | FD153 | FD228 |
| SR 50 REPLICA | | 50 | 92-92 | FD153 | MF630 |
| SR 50 STEALTH | | 50 | 97-99 | FD153 | FD153 |
| SR 50 URBAN | | 50 | 92-92 | FD153 | MF630 |
| SR 50 VIPER | | 50 | 92-92 | FD153 | MF630 |
| SR 50 WWW | | 50 | 97-99 | FD153 | FD153 |
| SCARABEO 70 | | 70 | 94- | FD153 | MF630 |
| SCARABEO 100 | | 100 | 00-03 | FD153 | MF630 |
| COMPAY | | 125 | 03- | FD153 | MF630 |
| LEONARDO 125 4T | | 125 | 96-98 | FD153 | FD153 |
| MOJITO 125 | | 125 | 05- | FD153 | MF630 |
| TUONO 125 | | 125 | 03- | FD118 | FD153 |
| **ATALA** | | | | | |
| BYTE | | 50 | 99- | FD153 | MF |
| HACKER AT 12 | | 50 | 99- | FD153 | MF |
| HACKER LC | | 50 | 99- | FD153 | MF |
| SKEGGIA | | 50 | 99- | FD153 | MF |
| **BENELLI** | | | | | |
| GT 491 | | 50 | 98- | FD153 | MF |
| K 2 | | 50 | 98- | FD153 | MF |
| K 2 LIQUID | | 50 | 98- | FD153 | MF |
| K 2 NAMUR | | 50 | 98- | FD153 | MF |
| MALA 50 | | 50 | 13- | FD153 | MF |
| NAKED 50 | | 50 | 98- | FD153 | MF |
| PEPE | | 50 | 98- | FD153 | MF |
| RACING 491 | | 50 | 98- | FD153 | FD200 |
| SPORT 491 | | 50 | 98- | FD153 | MF |
| SUPERBIKE 491 | | 50 | 98- | FD153 | FD200 |
| K 2 BIPOSTO | | 100 | 98- | FD153 | MF |
| ADIVA | | 125 | 00- | FD153 | FD263 |
| VELVET 125 | | 125 | 98-10 | FD153 | FD153 |
| VELVET 125 | | 125 | 11- | FD162 | FD153 |
| **BETA** | | | | | |
| ARK 50 | | 50 | 96-96 | FD153 | MF |
| ARK 50 LC - R | | 50 | 97- | FD153 | FD153 |
| CHRONO 50 | | 50 | 94- | FD153 | MF630 |
| QUADRA | | 50 | 94- | FD153 | MF630 |
| EIKON 125 4T | | 125 | 99- | FD153 | FD153 |
| **CONTI** | | | | | |
| PROMO CUP | | 50 | 00-03 | FD048 | FD153 |
| PROMO CUP | | 50 | 04- | FD210 | FD153 |
| **CPI** | | | | | |
| GTR | | 50 | 03- | FD162 | FD153 |
| GTS | | 50 | 03- | FD162 | FD153 |
| GTR 125 | | 125 | 03- | FD162 | FD153 |
| GTS 125 | | 125 | 03- | FD162 | FD153 |
| GENERIC | | | | | |
| ONIX | | 50 | 10- | FD153 | MF458 |
| **GILERA-PIAGGIO** | | | | | |
| 50 R | | 50 | 93- | FD153 | MF |
| 50 RT FUN | | 50 | 93- | FD153 | MF |
| 50 TYPHOON | | 50 | 93- | FD153 | MF621 |
| ICE 50 | | 50 | 01- | FD153 | MF |
| NRG MC2 | | 50 | 98-00 | FD153 | FD200 |
| NRG MC3 | | 50 | 01- | FD153 | FD200 |
| RUNNER 50 | | 50 | 97-97 | FD153 | MF636 |
| RUNNER 50 DD | | 50 | 98- | FD153 | FD200 |
| RUNNER 50 SP | | 50 | 98-04 | FD153 | FD200 |
| STALKER 50 | | 50 | 97- | FD153 | FD200 |
| 125 TYPHOON | | 125 | 95- | FD153 | MF621 |
| **HONDA** | | | | | |
| SFX 50 | | 50 | 95- | FD153 | MF002 |
| SGX 50 SKY | | 50 | 97- | FD153 | MF008 |
| SH 50 SCOOPY | | 50 | 96- | FD153 | MF002 |
| X8R-S | | 50 | 98- | FD153 | FD166 |
| SH 100 SCOOPY | | 100 | 96- | FD153 | MF002 |
| **HYOSUNG** | | | | | |
| EXCEED 125 | | 125 | 03- | FD153 | MF |
| **ITALJET** | | | | | |
| FORMULA | | 50 | 94-99 | FD153 | FD153 |
| FORMULA, LC | | 50 | 00- | FD153 | FD153 |
| **KEEWAY** | | | | | |
| GOCCIA 50 | | 50 | 07- | FD153 | MF |
| HACKER | | 50 | 08- | FD153 | MF |
| ARN 125 | | 125 | 05- | FD153 | MF |
| **KTM** | | | | | |
| 50 SCOOTER | | 50 | 94- | FD153 | MF630 |
| **MALAGUTI** | | | | | |
| 50 F10 | | 50 | 96- | FD153 | MF630 |
| CIAK | | 50 | 99- | FD153 | FD200 |
| YESTERDAY 50 | | 50 | 98- | FD153 | MF |
| CIAK | | 100 | 99- | FD153 | FD153 |
| F12 PHANTOM | | 100 | 00- | FD153 | FD153 |
| CIAK | | 125 | 03- | FD153 | FD153 |
| F 18 WARRIOR | | 125 | 00-03 | FD153 | FD228 |
| **MBK MOTOBEKANE** | | | | | |
| BOOSTER N.G. | | 50 | 99- | FD153 | MF750 |
| BOOSTER NAKED | | 50 | 06- | FD153 | MF750 |
| BOOSTER SPIRIT | | 50 | 98- | FD153 | MF750 |
| BOOSTER WHEEL 12" | | 50 | 06- | FD153 | MF750 |
| BOOSTER-R | | 50 | 94- | FD153 | MF750 |
| EVOLIS | | 50 | 92- | FD153 | MF458 |
| FIZZ | | 50 | 94- | FD153 | MF453 |
| FLIPPER | | 50 | 99- | FD153 | MF |
| OVETTO | | 50 | 98- | FD153 | MF458 |
| BOOSTER | | 100 | 99-99 | FD153 | MF750 |
| DOODO | | 125 | 00- | FD153 | MF640 |
| **PEUGEOT** | | | | | |
| BUXY 50 | | 50 | 94- | FD153 | MF002 |
| SPEEDDAKE | | 50 | 95- | FD153 | MF002 |
| **PIAGGIO** | | | | | |
| NRG | | 50 | 94-98 | FD153 | MF621 |
| NRG EXTREME AGUA | | 50 | 99- | FD153 | FD200 |
| NRG EXTREME AIRE | | 50 | 99- | FD153 | MF621 |
| NRG=MC2 | | 50 | 98-03 | FD153 | FD200 |
| NTT | | 50 | 95- | FD153 | MF621 |
| STORM | | 50 | 94- | FD153 | MF621 |
| TYPHOON | | 50 | 94-95 | FD153 | MF621 |
| TYPHOON | | 50 | 96-98 | FD153 | MF717 |
| TYPHOON-X | | 50 | 99-10 | FD153 | MF717 |
| ZIP FAST-RIDER | | 50 | 93-95 | FD153 | MF631 |
| TYPHOON | | 80 | 95-95 | FD153 | MF621 |
| TYPHOON | | 80 | 96- | FD153 | MF717 |
| FREE 100 | | 100 | 02- | FD153 | MF717 |
| HEXAGON | | 125 | 94-97 | FD153 | MF636 |
| TYPHOON | | 125 | 95-95 | FD153 | MF621 |

| | | | | |
|---|---|---|---|---|
| TYPHOON | 125 | 96-10 | FD153 | MF717 |
| **RENAULT** | | | | |
| CAMPUS | 50 | 02- | FD153 | MF |
| SPC 50 | 50 | 02- | FD153 | MF |
| FULLTIME | 125 | 02- | FD153 | FD200 |
| KOURANOS | 125 | 02- | FD153 | FD200 |
| **RIEJU** | | | | |
| F 10 JET LINE | 50 | 95- | FD153 | MF002 |
| **SUZUKI** | | | | |
| ADDRESS | 50 | 95- | FD153 | MF301 |
| AP 50 | 50 | 94- | FD153 | MF301 |
| ESTILLETE UF 50 | 50 | 00- | FD153 | MF |
| KATANA 50 | 50 | 97-98 | FD153 | MF301 |
| KATANA 50 DD | 50 | 99- | FD153 | FD065 |
| R7 ADDRESS 50 | 50 | 96- | FD153 | MF301 |
| RF 50 | 50 | 95- | FD153 | MF301 |
| ADDRESS | 100 | 95- | FD153 | MF641 |
| **VILLA** | | | | |
| 50 GZ | 50 | 93- | FD153 | MF |
| **YAMAHA** | | | | |
| AXIS COSMO | 50 | 95- | FD153 | MF630 |
| AXIS PLUS | 50 | 95- | FD153 | MF630 |
| BREEZE 50 | 50 | 95- | FD153 | MF453 |
| BW'S NAKED | 50 | 06- | FD153 | MF453 |
| BW'S NEXT GENERATION 50 | 50 | 96- | FD153 | MF453 |
| BW'S SPY 50 | 50 | 95-95 | FD153 | MF453 |
| BW'S WHEEL12" | 50 | 06- | FD153 | MF453 |
| WHY YH 50 | 50 | 98- | FD153 | MF453 |
| AEROX 100 | 100 | 00- | FD153 | FD206 |
| BW'S 100 | 100 | 00- | FD153 | MF640 |
| TEO´S 125 | 125 | 00- | FD153 | MF640 |

## FD 158

mm: 22,1 x 22,1 | A | 5,9 | B

G1054 | G1050

| BRAND MARCA | MODEL MODELO | C.C. | YEAR | FRONT | REAR |
|---|---|---|---|---|---|
| **POCKETBIKE** | | | | | |
| CALIPER POLINI | | | - | FD158 | FD |

## FD 162

mm: 76,8 x 41,8 | A | 7,5 | B

mm: 94,5 x 42,0 | A | 7,5 | B

G1054 | G1380

| BRAND MARCA | MODEL MODELO | C.C. | YEAR | FRONT | REAR |
|---|---|---|---|---|---|
| **APRILIA** | | | | | |
| MX SUPERMOTARD | 50 | 02- | FD162 | FD048 |
| RS 50 REPLICA | 50 | 99-06 | FD162 | FD048 |
| RX 50 | 50 | 93- | FD162 | FD048 |
| TUONO 50 | 50 | 03- | FD162 | FD048 |
| RX 125 | 125 | 95- | FD162 | FD135 |
| RX 125 C, CD | 125 | 93-94 | FD162 | FD170 |
| **BENELLI** | | | | |
| VELVET 125 | 125 | 11- | FD162 | FD153 |
| **BETA** | | | | |
| AR-T | 50 | 03-04 | FD162 | FD065 |
| AR-T | 50 | 05- | FD162 | FD223 |
| RR ENDURO | 50 | 08- | FD162 | FD456 |
| RR MOTARD | 50 | 08- | FD162 | FD456 |
| ALP 125 | 125 | 06-07 | FD162 | FD093 |
| ALP 125 | 125 | 08- | FD162 | FD456 |
| RR 125 4T | 125 | 06- | FD162 | FD456 |
| RR ENDURO | 125 | 08- | FD162 | FD456 |
| URBAN 125 | 125 | 08- | FD162 | FD456 |
| **CPI** | | | | |
| GTR | 50 | 03- | FD162 | FD153 |
| GTS | 50 | 03- | FD162 | FD153 |
| GTR 125 | 125 | 03- | FD162 | FD153 |
| GTS 125 | 125 | 03- | FD162 | FD153 |
| **DERBI** | | | | |
| BLACK DEVIL | 50 | 04- | FD162 | FD065 |
| DRD 50 R RACING | 50 | 06- | FD162 | FD065 |
| GP 1 OPEN | 50 | 06- | FD162 | FD065 |
| SENDA R DRD | 50 | 02-04 | FD162 | FD065 |
| SENDA DRD 125 R RACING | 125 | 06- | FD162 | FD065 |
| SENDA R 4T | 125 | 04- | FD162 | FD065 |
| SENDA SM 4T | 125 | 04- | FD162 | FD065 |
| **FACTORY** | | | | |
| CHRONO SM 50 | 50 | 02- | FD162 | FD065 |
| YR 50 DESERT | 50 | 01- | FD162 | FD065 |
| **FANTIC** | | | | |
| CABALLERO 50 RC | 50 | 94- | FD162 | FD048 |
| REGOLARITA CASA | 50 | 07- | FD162 | FD075 |
| SUPERSEI MOTARD | 50 | 07- | FD162 | FD075 |
| REGOLARITA CASA | 125 | 07- | FD162 | FD075 |
| **GAS GAS** | | | | |
| SM 50 | 50 | 05- | FD162 | FD225 |
| 125 PAMPERA | 125 | 03- | FD162 | FD225 |
| **GENERIC** | | | | |
| TOXIC 50 | 50 | 07- | FD162 | FD048 |
| TRIGGER SM 50 | 50 | 06- | FD162 | FD048 |
| TRIGGER X 50 | 50 | 06- | FD162 | FD048 |
| **GILERA-PIAGGIO** | | | | |
| DNA 50 (G) | 50 | 00- | FD162 | FD200 |
| DNA 125 (G) | 125 | 01- | FD162 | FD263 |
| RUNNER 125 FX (G) | 125 | 97-98 | FD162 | MF |
| RUNNER 125 SP | 125 | 99-00 | FD162 | FD200 |
| RUNNER 125 VX (G) | 125 | 01- | FD162 | FD263 |
| **HM** | | | | |
| CRE BAJA | 50 | 03-08 | FD162 | FD065 |
| CRE BAJA | 50 | 09- | FD162 | FD278 |
| CRE SIX | 50 | 99-02 | FD162 | FD075 |
| CRE SIX | 50 | 03- | FD162 | FD065 |
| DERAPAGE | 50 | 03-08 | FD162 | FD065 |
| DERAPAGE | 50 | 09- | FD162 | FD278 |
| CRE F 125 X | 125 | 08- | FD162 | FD278 |
| **KEEWAY** | | | | |
| TX 50 | 50 | 10- | FD162 | FD048 |
| X-RAY | 50 | 07- | FD162 | FD048 |
| X-RAY SC SUPERMOTO | 50 | 07- | FD162 | FD048 |
| TX 125 | 125 | 10- | FD162 | FD048 |
| **MALAGUTI** | | | | |
| XSM | 50 | 05- | FD162 | FD065 |
| MADISON 125 | 125 | 99-05 | FD162 | FD228 |
| MADISON 3 125 | 125 | 07- | FD162 | FD220 |
| PHANTOM MAX 125 | 125 | 04- | FD162 | FD220 |
| **MBK MOTOBEKANE** | | | | |
| X-LIMIT | 50 | 04- | FD162 | FD065 |
| X-POWER | 50 | 03- | FD162 | FD065 |
| **MONKEY BIKE** | | | | |
| MB 125 SM | 125 | 06- | FD162 | FD065 |
| MB 125 TR | 125 | 06- | FD162 | FD065 |
| **MOTORHISPANIA** | | | | |
| DUNA SPORT CITY | 125 | 09- | FD162 | FD252 |
| **PEUGEOT** | | | | |
| XPS SM | 50 | 05- | FD162 | FD065 |
| XPS STREET | 50 | 05- | FD162 | FD065 |
| ELISTAR EFI | 125 | 02- | FD162 | FD270 |
| GEO 125 RS | 125 | 10- | FD162 | FD270 |
| GEOPOLIS 125 (AJP) | 125 | 06- | FD162 | FD270 |
| JET FORCE | 125 | 03- | FD162 | FD270 |
| LXR 125 | 125 | 10- | FD162 | FD399 |
| SATELIS 125 | 125 | 10- | FD162 | FD270 |
| SATELIS 125 K15 (AJP) | 125 | 06- | FD162 | FD270 |
| SATELIS 125 K15 COMPRESOR (AJP) | 125 | 06- | FD162 | FD270 |
| **PIAGGIO** | | | | |
| BEVERLY 125 4T (G) | 125 | 02- | FD162 | FD162 |
| HEXAGON GTX 125 (G) | 125 | 00-00 | FD162 | FD263 |
| HEXAGON LX 125 (G) | 125 | 98-99 | FD162 | MF |
| SKIPPER LX (G) | 125 | 98-99 | FD162 | MF |
| SKR 125 ST 4T (G) | 125 | 00- | FD162 | MF |
| SUPER HEXAGON GTX 125 (G) | 125 | 01- | FD162 | FD263 |
| VESPA GRAN TURISMO (G) | 125 | 03- | FD162 | FD263 |
| **RIEJU** | | | | |
| MRX 50 | 50 | 03-07 | FD162 | FD065 |
| **SHERCO** | | | | |
| SM 1.25 F | 125 | 10- | FD162 | FD270 |
| **SUMCO** | | | | |
| 125 KR | 125 | 05- | FD162 | FD065 |
| KIRA KR 125 SM | 125 | 06- | FD162 | FD065 |
| KIRA KR 125 TR | 125 | 06- | FD162 | FD065 |
| **YAMAHA** | | | | |
| DT 50 LCD | 50 | 04-04 | FD162 | FD065 |
| DT 50 SUPERMOTARD | 50 | 05- | FD162 | FD065 |
| TZR 50 RR | 50 | 03- | FD162 | FD065 |
| XT 125 X | 125 | 05- | FD162 | FD270 |

## FD 163

mm: 48,0 x 45,5 | A | 7,1 | A

G1054 | G1805

| BRAND MARCA | MODEL MODELO | C.C. | YEAR | FRONT | REAR |
|---|---|---|---|---|---|
| **YAMAHA** | | | | | |
| TZ 125 GP | | 125 | 94- | FD099 | FD163 |

## FD 164

mm: 94,2 x 33,7 | A | 7,5 | A[1]

G1054 | G1805 | G1396

| BRAND MARCA | MODEL MODELO | C.C. | YEAR | FRONT | REAR |
|---|---|---|---|---|---|
| **FANTIC** | | | | | |
| REGOLARITA COMPETICION | 50 | 07- | FD164 | FD093 |
| REGOLARITA COMPETICION | 125 | 07- | FD164 | FD093 |
| X RIDER 125 | 125 | 07- | FD164 | FD093 |
| **GAS GAS** | | | | |
| HALLEY 125 | 125 | 09- | FD164 | FD093 |
| **HONDA** | | | | |
| XL 125 R | 125 | 98-00 | FD164 | MF003 |
| XR 125 L | 125 | 03- | FD164 | MF003 |
| **HONDA BRAZIL** | | | | |
| BIZ 125 | 125 | 11- | FD164 | MF |
| **SUZUKI** | | | | |
| DR 125 SM | 125 | 08- | FD164 | FD093 |
| **ZERO** | | | | |
| ZERO DS DUAL SPORT | EL | 13- | FD164 | FD286 |
| ZERO FX STEALTHFIGHTER | EL | 13- | FD164 | FD286 |
| ZERO MX | EL | 13- | FD164 | FD286 |
| ZERO S STREETFIGHTER | EL | 13- | FD164 | FD286 |
| ZERO XU URBAN CROSSER | EL | 13- | FD164 | FD286 |

## FD 165

mm: 78,0 x 40,8 | A | 9,0 | A[1]

G1054 | G1805 | G1371 | G1396

| BRAND MARCA | MODEL MODELO | C.C. | YEAR | FRONT | REAR |
|---|---|---|---|---|---|
| **HONDA** | | | | | |
| X8R-S | | 50 | 98- | FD153 | FD166 |
| **KYMCO** | | | | | |
| 50 SNIPER | | 50 | 94- | FD166 | MF002 |
| CURIO CX | | 50 | 94- | FD166 | MF002 |
| 125 FREEWY | | 125 | 94- | FD166 | MF |
| **SYM** | | | | | |
| JET SPORT X | | 50 | 06- | FD188 | FD166 |



For other models years previous to 1990 visit **www.galferonline.es** · Para otros modelos anteriores al año 1990 visitar **www.galferonline.es**
For consult TÜV (ABE) type approvals visit **www.galfermoto.com --> DOWNLOAD --> TÜV CERTIFICATIONS** · Para consultar las homologaciones TÜV (ABE) visitar **www.galfermoto.com --> DESCARGAS --> CERTIFICACIONES TÜV**

## FD 169

mm 94,2 x 41,0 | 10,0 | A | A

G1054 | G1050 | G1370 | G1375 | G1380

| BRAND MARCA | MODEL MODELO | C.C. | YEAR | FRONT | REAR |
|---|---|---|---|---|---|
| **ALPINA** | | | | | |
| RENANIA VERONA 125 | | 125 | 06- | FD169 | FD214 |
| **MINELLI** | | | | | |
| OMEGA 125 | | 125 | 06- | FD169 | FD214 |
| **MOTOM** | | | | | |
| TRANSCITY | | 125 | 07- | FD169 | FD073 |
| **SUMCO** | | | | | |
| MS 125 | | 125 | 06- | FD169 | FD214 |
| **YAMAHA** | | | | | |
| SR 125 | | 125 | 98- | FD169 | MF458 |
| TDR 125 R | | 125 | 93- | FD169 | FD079 |
| XV 125 VIRAGO | | 125 | 97-99 | FD169 | MF640 |
| XVS 125 DRAG STAR | | 125 | 00- | FD169 | MF640 |

## FD 170

mm 39,8 x 56,3 | 7,3 | A | A

G1054 | G1050 | G1805

| BRAND MARCA | MODEL MODELO | C.C. | YEAR | FRONT | REAR |
|---|---|---|---|---|---|
| **APRILIA** | | | | | |
| SR 50 REPLICA | | 50 | 93-93 | FD170 | MF630 |
| PEGASO 125 KAT | | 125 | 93- | FD118 | FD170 |
| RS 125 EXTREMA, REPLICA | | 125 | 92-05 | FD118 | FD170 |
| RX 125 C, CD | | 125 | 93-94 | FD162 | FD170 |
| SPORT PROT 125 | | 125 | 92-94 | FD118 | FD170 |
| **DERBI** | | | | | |
| VAMOS R | | 50 | 95-95 | FD170 | MF625 |
| **YAMAHA** | | | | | |
| AXIS 50 (I) | | 50 | 93- | FD170 | MF630 |
| BW'S 50 R | | 50 | 95-95 | FD170 | MF453 |
| ZEST 50 | | 50 | 93- | FD170 | MF460 |
| BW'S 65 | | 65 | 95- | FD170 | MF453 |
| **ZANELLA** | | | | | |
| ARGENTO | | 50 | 94- | FD170 | MF |
| SUDAMERICA | | 50 | 94- | FD170 | MF |

## FD 171

mm 39,8 x 54,0 | 6,4 | A | A

G1054 | G1050

| BRAND MARCA | MODEL MODELO | C.C. | YEAR | FRONT | REAR |
|---|---|---|---|---|---|
| **APRILIA** | | | | | |
| RS 50 EXTREMA | | 50 | 94-95 | FD171 | FD048 |
| SR 50 EUROPA, URBAND KID, VIPER | | 50 | 94-94 | FD171 | MF630 |
| SR 50 VIPER | | 50 | 94-94 | FD171 | MF630 |
| **CAGIVA** | | | | | |
| CUCCIOLO | | 50 | 01- | FD171 | MF |
| NUVOLA | | 50 | 00- | FD171 | MF |
| CUCCIOLO | | 125 | 99- | FD171 | MF |
| NUVOLA | | 125 | 00- | FD171 | MF |
| **HYOSUNG** | | | | | |
| GRAND PRIX 125 | | 125 | 98- | FD171 | MF |
| **MBK MOTOBEKANE** | | | | | |
| MACH G/R | | 50 | 02- | FD171 | MF |
| NITRO | | 50 | 97- | FD171 | FD206 |
| **YAMAHA** | | | | | |
| AEROX 50 | | 50 | 97- | FD171 | FD206 |
| AEROX 50 NAKED | | 50 | 13- | FD171 | FD206 |
| BW'S BUMP | | 50 | 96- | FD171 | MF453 |
| JOG R | | 50 | 02- | FD171 | MF |
| JOG RR LC | | 50 | 02- | FD171 | MF |
| NEO´S | | 50 | 97- | FD171 | MF458 |
| NEO´S 50 4T | | 50 | 09- | FD171 | MF458 |
| ZEST 80 | | 80 | 94- | FD171 | MF460 |
| NEO´S 100 | | 100 | 00- | FD171 | MF640 |

## FD 172

mm 108,7 x 39,8 | 7,5 | A | A[1]

G1054 | G1370

| BRAND MARCA | MODEL MODELO | C.C. | YEAR | FRONT | REAR |
|---|---|---|---|---|---|
| **BMW** | | | | | |
| C1 125 | | 125 | 00- | FD172 | FD165 |
| **YAMAHA** | | | | | |
| DT 125 X | | 125 | 05- | FD172 | FD114 |

## FD 175

mm 60,0 x 44,0 | 9,0 | A | A

G1054 | G1050

| BRAND MARCA | MODEL MODELO | C.C. | YEAR | FRONT | REAR |
|---|---|---|---|---|---|
| **BENELLI** | | | | | |
| 49 X | | 50 | 07- | FD175 | MF |
| **CAGIVA** | | | | | |
| NAG 50 | | 50 | 08- | FD175 | MF |
| **CPI** | | | | | |
| ARAGON /GP 50 | | 50 | 06- | FD175 | MF458 |
| FREAKY | | 50 | 07- | FD175 | MF458 |
| POPCORN | | 50 | 01- | FD175 | MF458 |
| ARAGON /GP 125 | | 125 | 07- | FD175 | MF452 |
| **CSR** | | | | | |
| ONA | | 125 | 04- | FD175 | FD175 |
| SCOO | | 125 | 04- | FD175 | FD175 |
| **GENERIC** | | | | | |
| EPICO | | 50 | 10- | FD175 | MF458 |
| IDEO | | 50 | 05- | FD175 | MF458 |
| ROC | | 50 | 08- | FD175 | MF458 |
| XOR | | 50 | 05- | FD175 | MF458 |
| XOR 2 | | 50 | 10- | FD175 | MF458 |
| IDEO 125 | | 125 | 05- | FD175 | MF458 |
| SOHO 125 | | 125 | 06- | FD175 | MF |
| XOR 125 | | 125 | 05- | FD175 | MF458 |
| **KEEWAY** | | | | | |
| F ACT 50 / RACING | | 50 | 07- | FD175 | MF |
| F NKD 50 | | 50 | 09- | FD175 | MF |
| FLASH 50 | | 50 | 07- | FD175 | MF |
| FOCUS 50 | | 50 | 05- | FD175 | MF |
| MATRIX 50 | | 50 | 05- | FD175 | MF |
| F ACT 125 / RACING | | 125 | 08- | FD175 | MF |
| MATRIX 125 | | 125 | 07- | FD175 | MF |
| VIVA 125 | | 125 | 05- | FD175 | FD175 |
| VIVA II 125 | | 125 | 05- | FD086 | FD175 |
| **KYMCO** | | | | | |
| HEROISM 50 | | 50 | 95- | FD175 | MF002 |
| HEROISM | | 125 | 95- | FD175 | MF002 |
| **MOTOM** | | | | | |
| GYPSY | | 50 | 07- | FD175 | MF |
| DOLCEVITA | | 125 | 07- | FD175 | FD073 |
| LAMBRETTA | | 125 | 08- | FD175 | MF |
| **PEUGEOT** | | | | | |
| VIVACITY SIXTIES | | 50 | 10- | FD175 | MF002 |
| **SACHS** | | | | | |
| 49 ER 12ª | | 50 | 08- | FD175 | MF |
| SPEEDFORCE 50 | | 50 | 08- | FD175 | MF |
| SPEEDJET 50 | | 50 | 08- | FD175 | MF |
| SX-1 50 | | 50 | 08- | FD175 | MF |

## FD 176

mm 75,0 x 55,5 | 8,7 | A | A

G1054 | G1370 | G1375 | G1300

| BRAND MARCA | MODEL MODELO | C.C. | YEAR | FRONT | REAR |
|---|---|---|---|---|---|
| **HYOSUNG** | | | | | |
| EXIV 125 | | 125 | 12- | FD176 | FD094 |

## FD 177

mm 76,5 x 41,3 | 8,2 | A | B

mm 99,0 x 39,8 | 7,5 | A | B

G1054 | G1050

| BRAND MARCA | MODEL MODELO | C.C. | YEAR | FRONT | REAR |
|---|---|---|---|---|---|
| **KAWASAKI** | | | | | |
| KMX 125 | | 125 | 99- | FD177 | FD075 |
| **SUZUKI** | | | | | |
| TR 50 STREET MAGIC | | 50 | 98- | FD177 | MF641 |
| HOKUTO UG 110 | | 110 | 00- | FD177 | MF641 |
| AN VECSTAR | | 125 | 95- | FD177 | MF301 |
| DR-Z 125 L | | 125 | 03- | FD177 | MF |
| EPICURO 125 | | 125 | 99- | FD177 | MF |
| **SUZUKI INDONESIA** | | | | | |
| LETS 110 | | 110 | 12- | FD177 | MF |
| NEX 110 | | 110 | 11- | FD177 | MF |
| NEX FI 110 | | 110 | 11- | FD177 | MF |
| **SUZUKI MALASIA** | | | | | |
| NEX 110 | | 110 | 11- | FD177 | MF |

## FD 179

mm 109,0 x 44,0 | 8,4 | A | B

mm 131,9 x 37,2 | 8,4 | A | B

G1054 | G1370 | G1375

| BRAND MARCA | MODEL MODELO | C.C. | YEAR | FRONT | REAR |
|---|---|---|---|---|---|
| **SUZUKI** | | | | | |
| RV 125 VAN VAN | | 125 | 03- | FD179 | MF |

## FD 187

mm 77,4 x 42,3 | 9,0 | A | B

mm 98,8 x 42,3 | 9,0 | A | B

G1054 | G1050 | G1380

| BRAND MARCA | MODEL MODELO | C.C. | YEAR | FRONT | REAR |
|---|---|---|---|---|---|
| **AEON** | | | | | |
| URBAN 125 | | 125 | 11- | FD187 | FD094 |
| **BENELLI** | | | | | |
| HOBBY 125 | | 125 | 13- | FD187 | FD187 |
| MACIS 125 | | 125 | 08- | FD187 | FD187 |
| **CCM** | | | | | |

| | | | | |
|---|---|---|---|---|
| RL 125 | 125 | 08- | FD187 | MF |
| **CFMOTO** | | | | |
| E-CHARM | 125 | 10- | FD187 | FD079 |
| GLORY | 125 | 10- | FD187 | FD200 |
| **DAELIM** | | | | |
| A-FOUR | 50 | 06- | FD187 | MF |
| **GENERIC** | | | | |
| ZION 125 | 125 | 08- | FD187 | MF |
| **HONDA** | | | | |
| CA 125 REBEL | 125 | 95-98 | FD187 | MF005 |
| **KEEWAY** | | | | |
| OUTLOOK 125 | 125 | 07- | FD187 | FD187 |
| SUPERLIGHT 125 | 125 | 07- | FD187 | MF |
| **KYMCO** | | | | |
| AGILITY 50 | 50 | 05- | FD187 | MF740 |
| AGILITY RS 50 | 50 | 09- | FD187 | MF740 |
| FILLY 50 ELEGANCE | 50 | 03- | FD187 | MF002 |
| LIKE | 50 | 09- | FD187 | MF |
| VITALITY 2T | 50 | 04- | FD187 | MF |
| VITALITY 4T | 50 | 05- | FD187 | MF |
| YUP | 50 | 04- | FD187 | MF |
| AGILITY 125 | 125 | 06-08 | FD187 | MF740 |
| AGILITY RS 125 | 125 | 09- | FD187 | MF740 |
| LIKE | 125 | 09- | FD187 | FD145 |
| MOVIE | 125 | 97-08 | FD187 | MF740 |
| STRYKER 125 | 125 | 99- | FD187 | MF |
| VIVIO 125 | 125 | 99- | FD187 | MF740 |
| **PEUGEOT** | | | | |
| DJANGO EVASION | 50 | 15- | FD187 | MF |
| DJANGO HERITAGE | 50 | 15- | FD187 | MF |
| CITY STAR 125 | 125 | 11- | FD187 | FD200 |
| CITY STAR 125 ACTIVE | 125 | 13- | FD187 | FD200 |
| GEOPOLIS 125 (NISSIN) | 125 | 06- | FD187 | FD187 |
| NEW VIVACITY 125 | 125 | 10- | FD187 | MF |
| SATELIS 125 K15 (NISSIN) | 125 | 07- | FD187 | FD270 |
| SATELIS 125 K15 COMPRESOR (NISSIN) | 125 | 07- | FD187 | FD270 |
| SATELIS 125 RS | 125 | 13- | FD187 | FD200 |
| E-SATELIS | EL | 11- | FD187 | FD187 |
| E-VIVACITY | EL | 10- | FD187 | MF002 |

## FD 188

mm: 70,2 x 41,1 — A / B
mm: 85,1 x 44,3 — A / B

G1054 | G1050 | G1380 |

| BRAND MARCA | MODEL MODELO | C.C. | YEAR | FRONT | REAR |
|---|---|---|---|---|---|
| **ADIVA** | | | | | |
| AD 125 | | 125 | 09- | FD188 | FD220 |
| **CAGIVA** | | | | | |
| PASSING 50 | | 50 | 95- | FD188 | |
| PASSING 125 | | 125 | 95- | FD188 | MF |
| **LAMBRETTA** | | | | | |
| LN 125 | | 125 | 12- | FD188 | MF |
| **P.G.O.** | | | | | |
| G-MAX | | 50 | 05- | FD188 | MF |
| LIBRA 50 | | 50 | 09- | FD188 | MF |
| LIGERO 50 | | 50 | 08- | FD188 | MF |
| PMS | | 50 | 99- | FD188 | MF641 |
| T-REX 50 | | 50 | 99- | FD188 | MF641 |
| PMS | | 110 | 99- | FD188 | MF |
| T-REX 110 | | 110 | 99- | FD188 | MF |
| LIBRA 125 | | 125 | 09- | FD188 | MF |
| LIGERO 125 | | 125 | 06- | FD188 | MF |
| T-REX 125 4-T | | 125 | 99- | FD188 | MF |
| **PEUGEOT** | | | | | |
| LXR 50 | | 50 | 10- | FD188 | FD399 |
| TWEET 50 | | 50 | 10- | FD188 | MF |
| TWEET 125 | | 125 | 10- | FD188 | |
| **SANYANG** | | | | | |
| DUKE 125 | | 125 | 94- | FD188 | MF |

| | | | | |
|---|---|---|---|---|
| **SYM** | | | | |
| FIDDLE 50 | 50 | 08- | FD188 | MF |
| JET | 50 | 99-05 | FD188 | MF |
| JET 4 | 50 | 10- | FD188 | MF |
| JET 4 R | 50 | 11- | FD188 | MF |
| JET BASI X | 50 | 07- | FD188 | MF |
| JET EURO X | 50 | 05- | FD188 | MF |
| JET SPORT X | 50 | 06- | FD188 | FD166 |
| JUNGLE | 50 | 99- | FD188 | MF630 |
| MASK /LC | 50 | 00- | FD188 | MF630 |
| SYMPLY 50 | 50 | 07- | FD188 | MF |
| JET EURO X 100 | 100 | 05- | FD188 | MF |
| JET SPORT X 100 SR | 100 | 06- | FD188 | MF |
| ATTILA | 125 | 99- | FD188 | MF |
| CITYCOM 125 | 125 | 09- | FD188 | FD399 |
| FIDDLE 125 | 125 | 08- | FD188 | MF |
| HD 125 EVO | 125 | 06- | FD188 | FD399 |
| HD 2 125 CBS | 125 | 15- | FD188 | FD399 |
| JET 4 | 125 | 10- | FD188 | MF |
| MEGALO | 125 | 02- | FD188 | MF |
| NEW DUKE | 125 | 02- | FD188 | MF |
| SUPER DUKE | 125 | 99- | FD188 | MF641 |
| SYMPHONY 125 | 125 | 09- | FD188 | MF |
| SYMPHONY 125 S | 125 | 10- | FD188 | FD200 |
| SYMPHONY 125 SR | 125 | 10- | FD188 | FD200 |
| SYMPLY 125 | 125 | 07- | FD188 | MF |
| **TGB** | | | | |
| 101 | 50 | 05- | FD188 | MF453 |
| AKROS 50 | 50 | 99- | FD188 | MF |
| DELIVERY | 50 | 04- | FD188 | MF |
| PLATFORM 50 | 50 | 06- | FD188 | MF |
| 101 | 125 | 05- | FD188 | MF453 |
| PLATFORM 125 | 125 | 06- | FD188 | MF |
| **ZERO** | | | | |
| ZERO DS | EL | 10-12 | FD188 | FD094 |
| ZERO MX | EL | 10-12 | FD188 | FD094 |
| ZERO S | EL | 10-12 | FD188 | FD094 |
| ZERO X | EL | 10- | FD188 | FD094 |
| ZERO XU | EL | 10-12 | FD188 | FD094 |

## FD 190

mm: 39,8 x 56,3 — A / A

G1054 |

| BRAND MARCA | MODEL MODELO | C.C. | YEAR | FRONT | REAR |
|---|---|---|---|---|---|
| **HONDA** | | | | | |
| NSR 125 F ( I ) | | 125 | 90- | FD074 | FD190 |
| NSR 125 R ( I ) | | 125 | 90- | FD074 | FD190 |

## FD 195

mm: 79,0 x 47,1 — A / A

G1054 | G1050 |

| BRAND MARCA | MODEL MODELO | C.C. | YEAR | FRONT | REAR |
|---|---|---|---|---|---|
| **HONDA** | | | | | |
| BALI 50 SJ | | 50 | 95- | FD195 | MF002 |
| BALI SJ 100 EX | | 100 | 95- | FD195 | MF002 |
| CA 125 REBEL | | 125 | 99- | FD195 | MF005 |
| CITYFLY 125 | | 125 | 99- | FD195 | MF |

## FD 197

mm: 31,5 x 49,0 — A / A

G1054 |

| BRAND MARCA | MODEL MODELO | C.C. | YEAR | FRONT | REAR |
|---|---|---|---|---|---|
| **PIAGGIO** | | | | | |
| SFERA | | 50 | 96- | FD197 | MF621 |

## FD 200

mm: 35,6 x 49,0 — A / A

G1054 | G1050 | G1380 |

| BRAND MARCA | MODEL MODELO | C.C. | YEAR | FRONT | REAR |
|---|---|---|---|---|---|
| **BENELLI** | | | | | |
| RACING 491 | | 50 | 98- | FD153 | FD200 |
| SUPERBIKE 491 | | 50 | 98- | FD153 | FD200 |
| **CFMOTO** | | | | | |
| GLORY | | 125 | 10- | FD187 | FD200 |
| **DERBI** | | | | | |
| SONAR | | 50 | 10- | FD200 | MF |
| SONAR | | 125 | 10- | FD200 | MF |
| **GILERA-PIAGGIO** | | | | | |
| DNA 50 (G) | | 50 | 00- | FD162 | FD200 |
| DNA 50 (H) | | 50 | 00- | FD277 | FD200 |
| NRG MC2 | | 50 | 98-00 | FD153 | FD200 |
| NRG MC3 | | 50 | 01- | FD153 | FD200 |
| RUNNER 50 DD | | 50 | 98- | FD153 | FD200 |
| RUNNER 50 SP | | 50 | 98-04 | FD153 | FD200 |
| RUNNER 50 SP | | 50 | 05-05 | FD135 | FD200 |
| RUNNER 50 SP / PJ | | 50 | 06- | FD277 | FD200 |
| STALKER 50 | | 50 | 97- | FD153 | FD200 |
| RUNNER 125 SP | | 125 | 99-00 | FD162 | FD200 |
| **LML** | | | | | |
| STAR 2T (TODAS) | | 125 | 10- | FD200 | MF601 |
| STAR 4T (TODAS) | | 125 | 10- | FD200 | MF601 |
| STAR BICOLOR VINTAGE 4T | | 125 | 10- | FD200 | MF601 |
| STAR GT 2T | | 125 | 10- | FD200 | MF601 |
| STAR GT 4T | | 125 | 10- | FD200 | MF601 |
| STAR MAT SERIES 4T | | 125 | 10- | FD200 | MF601 |
| STAR RS 4T | | 125 | 10- | FD200 | MF601 |
| **MALAGUTI** | | | | | |
| CIAK | | 50 | 99- | FD153 | FD200 |
| **METRAKIT** | | | | | |
| MINI GP SP 70 | | 70 | 08- | FD200 | FD224 |
| **PEUGEOT** | | | | | |
| CITY STAR 125 | | 125 | 11- | FD187 | FD200 |
| CITY STAR 125 ACTIVE | | 125 | 13- | FD187 | FD200 |
| SATELIS 125 RS | | 125 | 13- | FD187 | FD200 |
| **PIAGGIO** | | | | | |
| LIBERTY 50 | | 50 | 97-99 | FD200 | MF |
| LIBERTY 50 4T | | 50 | 00-08 | FD200 | MF |
| NRG EXTREME AGUA | | 50 | 99- | FD153 | FD200 |
| NRG POWER DD | | 50 | 05- | FD094 | FD200 |
| NRG POWER PURE JET | | 50 | 05- | FD094 | FD200 |
| NRG=MC2 | | 50 | 98-03 | FD153 | FD200 |
| NRG=MC3 PURE JET | | 50 | 04- | FD094 | FD200 |
| S 50 4T | | 50 | 09- | FD200 | MF |
| VESPA 50 ET2 | | 50 | 00- | FD200 | MF636 |
| VESPA 50 ET4 | | 50 | 01- | FD200 | MF636 |
| VESPA 50 S 4V | | 50 | 09- | FD200 | MF636 |
| ZIP 4T | | 50 | 00- | FD200 | MF631 |
| ZIP CATALIZADA | | 50 | 00- | FD200 | MF631 |
| ZIP SP LC | | 50 | 96-99 | FD200 | MF631 |
| ZIP 100 | | 100 | 07- | FD200 | MF636 |
| LIBERTY 4-T | | 125 | 98-08 | FD200 | MF |
| MP 3 125 | | 125 | 06-08 | FD200 | FD343 |
| MP 3 125 LT | | 125 | 09- | FD200 | FD334 |
| MP 3 125 YOURBAN | | 125 | 11- | FD200 | FD334 |
| MP 3 HYBRID | | 125 | 09- | FD200 | FD334 |
| SFERA 4T | | 125 | 96- | FD200 | MF636 |



For other models years previous to 1990 visit **www.galferonline.es** - Para otros modelos anteriores al año 1990 visitar **www.galferonline.es**
For consult TÜV (ABE) type approvals visit **www.galfermoto.com --> DOWNLOAD --> TÜV CERTIFICATIONS** - Para consultar las homologaciones TÜV (ABE) visitar **www.galfermoto.com --> DESCARGAS --> CERTIFICACIONES TÜV**

| | | | | |
|---|---|---|---|---|
| VESPA ET4 | 125 | 96- | FD200 | MF636 |
| VESPA GTS 125 SUPER | 125 | 09- | FD277 | FD200 |
| VESPA LX 125 | 125 | 09- | FD277 | FD200 |
| ZIP 125 | 125 | 00- | FD200 | MF |
| **RENAULT** | | | | |
| FULLTIME | 125 | 02- | FD153 | FD200 |
| KOURANOS | 125 | 02- | FD153 | FD200 |
| **SYM** | | | | |
| SYMPHONY 125 S | 125 | 10- | FD188 | FD200 |
| SYMPHONY 125 SR | 125 | 10- | FD188 | FD200 |

## FD 206

mm 45,6 x 52,5 | 7,0 | A | A

G1054 | G1050 | G1380 |

| BRAND MARCA | MODEL MODELO | C.C. | YEAR | FRONT | REAR |
|---|---|---|---|---|---|
| **MBK MOTOBEKANE** | | | | | |
| NITRO | | 50 | 97- | FD171 | FD206 |
| STUNT | | 50 | 00- | FD206 | MF |
| **YAMAHA** | | | | | |
| AEROX 50 | | 50 | 97- | FD171 | FD206 |
| AEROX 50 NAKED | | 50 | 13- | FD171 | FD206 |
| SLIDER | | 50 | 99- | FD206 | MF453 |
| AEROX 100 | | 100 | 00- | FD153 | FD206 |

## FD 207

mm 115,0 x 41,1 | 9,4 | A | A[1]

G1054 | G1050 | G1370 | G1380 |

| BRAND MARCA | MODEL MODELO | C.C. | YEAR | FRONT | REAR |
|---|---|---|---|---|---|
| **HONDA** | | | | | |
| PANTHEON 125 | | 125 | 98-02 | FD207 | MF044 |
| PANTHEON 125 | | 125 | 03- | FD207 | FD103 |

## FD 209

mm 77,0 x 54,0 | 7,0 | A | A

G1054 | G1050 |

| BRAND MARCA | MODEL MODELO | C.C. | YEAR | FRONT | REAR |
|---|---|---|---|---|---|
| **SUZUKI** | | | | | |
| GZ 125 MARAUDER | | 125 | 98- | FD209 | MF |
| TU 125 | | 125 | 00- | FD209 | MF151 |
| VL 125 MARAUDER | | 125 | 00- | FD209 | MF |

## FD 210

mm 55,0 x 42,2 | 6,3 | A | A

G1054 | G1805 |

| BRAND MARCA | MODEL MODELO | C.C. | YEAR | FRONT | REAR |
|---|---|---|---|---|---|
| **CONTI** | | | | | |
| PROMO CUP | | 50 | 04- | FD210 | FD153 |

## FD 214

mm 99,8 x 31,0 | 8,0 | A | A

G1054 | G1050 | G1371 | G1380 |

| BRAND MARCA | MODEL MODELO | C.C. | YEAR | FRONT | REAR |
|---|---|---|---|---|---|
| **ALPINA** | | | | | |
| RENANIA VERONA 125 | | 125 | 06- | FD169 | FD214 |
| **MBK MOTOBEKANE** | | | | | |
| SKYCRUISER ABS | | 125 | 11- | FD140 | FD214 |
| **MINELLI** | | | | | |
| OMEGA 125 | | 125 | 06- | FD169 | FD214 |
| **SUMCO** | | | | | |
| MS 125 | | 125 | 06- | FD169 | FD214 |
| **YAMAHA** | | | | | |
| RZ 50 | | 50 | 02- | FD214 | MF |
| TW 125 | | 125 | 98- | FD214 | MF |
| X - MAX 125 | | 125 | 10- | FD266 | FD214 |
| X - MAX 125 ABS | | 125 | 10- | FD266 | FD214 |
| **YAMAHA BRASIL** | | | | | |
| NEO AT 115 | | 115 | 05- | FD214 | MF |
| **YAMAHA INDONESIA** | | | | | |
| JUPITER - T 105 SE | | 105 | 01-04 | FD214 | MF |
| VEGA R - T 105 SE | | 105 | 04- | FD214 | MF |
| F1 - Z - V 110 E | | 110 | 97- | FD214 | MF |
| F1 - ZR - V 110 | | 110 | 97- | FD214 | MF |
| F1 - ZR - V 110 E | | 110 | 97- | FD214 | MF |
| JUPITER Z - T 110 C | | 110 | 05- | FD214 | MF |
| JUPITER Z - T 110 SE | | 110 | 03- | FD214 | MF |
| JUPITER Z - T 110 SEC | | 110 | 06- | FD214 | MF |
| NOUVO AT 115 | | 115 | 03- | FD214 | MF |
| NOUVO Z AT 115 C | | 115 | 05- | FD214 | MF |

## FD 220

mm 50,8 x 53,9 | 8,0 | A | A

G1054 | G1050 | G1371 | G1380 |

| BRAND MARCA | MODEL MODELO | C.C. | YEAR | FRONT | REAR |
|---|---|---|---|---|---|
| **ADIVA** | | | | | |
| AD 125 | | 125 | 09- | FD188 | FD220 |
| **APRILIA** | | | | | |
| RS 50 | | 50 | 07- | FD220 | FD065 |
| **BENELLI** | | | | | |
| 666 | | 125 | 98- | FD068 | FD220 |
| **CPI** | | | | | |
| X-LARGE 125 | | 125 | 03- | FD220 | FD220 |
| **DERBI** | | | | | |
| DRD 50 PRO R | | 50 | 06- | FD220 | FD065 |
| DRD 50 R RACING PRO | | 50 | 06- | FD220 | FD065 |
| DRD 50 SM EDITION / RACING | | 50 | 06- | FD220 | FD065 |
| GP 1 | | 50 | 05- | FD220 | FD065 |
| GPR 50 NUDE | | 50 | 04- | FD220 | FD065 |
| GPR 50 R | | 50 | 04-09 | FD220 | FD065 |
| GPX 1 | | 50 | 06- | FD220 | FD065 |
| SENDA PRO | | 50 | 08- | FD220 | FD270 |
| SENDA SM DRD 50 EVO | | 50 | 09- | FD220 | FD065 |
| GP 1 125 | | 125 | 06- | FD220 | FD220 |
| SENDA DRD 125 R 4T 4V | | 125 | 09- | FD220 | FD252 |
| **KEEWAY** | | | | | |
| SILVER BLADE 125 | | 125 | 07- | FD138 | FD220 |
| **MALAGUTI** | | | | | |
| DRAKON NKD | | 50 | 05- | FD220 | FD065 |
| MADISON 3 125 | | 125 | 07- | FD162 | FD220 |
| PHANTOM MAX 125 | | 125 | 04- | FD162 | FD220 |
| **MBK MOTOBEKANE** | | | | | |
| CITYLINER | | 125 | 09- | FD355 | FD220 |
| SKYCRUISER | | 125 | 06-09 | FD355 | FD220 |
| SKYCRUISER | | 125 | 10- | FD140 | FD220 |
| SKYLINER | | 125 | 01- | FD138 | FD220 |
| THUNDER | | 125 | 01- | FD138 | FD220 |
| **METRAKIT** | | | | | |
| MINI GP XL | | 50 | 05- | FD220 | FD224 |
| **PEUGEOT** | | | | | |
| SPEEDFIGHT 3 LC | | 50 | 09- | FD073 | FD220 |
| DJANGO ALLURE | | 125 | 14- | FD086 | FD220 |
| DJANGO SPORT | | 125 | 14- | FD086 | FD220 |
| **PIAGGIO** | | | | | |
| X 8 | | 125 | 04-05 | FD277 | FD220 |
| X 9 | | 125 | 01- | FD220 | FD220 |
| X 9 EVOLUTION RIGHT/DER. | | 125 | 04-05 | FD334 | FD220 |
| **RIEJU** | | | | | |
| MRT PRO 50 | | 50 | 09- | FD220 | FD252 |
| MRT SM PRO 50 | | 50 | 09- | FD220 | FD252 |
| MRX 50 PRO | | 50 | 08- | FD220 | FD065 |
| TANGO 50 | | 50 | 07-08 | FD220 | FD065 |
| TANGOO 50 | | 50 | 08- | FD220 | FD065 |
| MARATHON PRO 125 SM | | 125 | 09- | FD220 | FD252 |
| SMX 125 | | 125 | 08- | FD220 | FD065 |
| TANGO 125 | | 125 | 06-10 | FD220 | FD065 |
| TANGO 125 PRO | | 125 | 07- | FD220 | FD065 |
| **SUZUKI** | | | | | |
| UH 125 BURGMAN | | 125 | 02-06 | FD138 | FD220 |
| **TOMOS** | | | | | |
| 125 SM | | 125 | 05- | FD220 | FD065 |
| **YAMAHA** | | | | | |
| MAXTER 125 | | 125 | 01- | FD138 | FD220 |
| SP 125 MAGESTY | | 125 | 01- | FD138 | FD220 |
| X - CITY | | 125 | 09- | FD140 | FD220 |
| X - MAX 125 | | 125 | 06-09 | FD355 | FD220 |

## FD 222

mm 44,8 x 53,4 | 8,6 | A | A

G1054 | G1050 | G1380 |

| BRAND MARCA | MODEL MODELO | C.C. | YEAR | FRONT | REAR |
|---|---|---|---|---|---|
| **DAELIM** | | | | | |
| B-BONE | | 125 | 08- | FD222 | FD095 |
| OTELO f.i. | | 125 | 08- | FD222 | FD095 |
| S2 125 FREEWING f.i. | | 125 | 08- | FD222 | FD095 |

## FD 223

mm 50,0 x 43,8 | 6,0 | A | A

G1054 | G1805 |

| BRAND MARCA | MODEL MODELO | C.C. | YEAR | FRONT | REAR |
|---|---|---|---|---|---|
| **BETA** | | | | | |
| AR-T | | 50 | 05- | FD162 | FD223 |
| **METRAKIT** | | | | | |
| MINI GP XL 80 PRO | | 80 | 04- | FD223 | FD224 |

## FD 224

mm 36,0 x 39,0 | 6,0 | A | A

G1054 | G1050 | G1805 |

| BRAND MARCA | MODEL MODELO | C.C. | YEAR | FRONT | REAR |
|---|---|---|---|---|---|
| **BETA** | | | | | |
| MINI TRIAL 50 | | 50 | 09- | FD224 | FD224 |
| **FACTORY** | | | | | |
| PHANTHOM R 12 | | 50 | 03- | FD224 | FD065 |
| PHANTHOM R 14 | | 50 | 03- | FD224 | FD065 |
| **GAS GAS** | | | | | |
| EC ENDUCROSS BOY | | 50 | 06- | FD225 | FD224 |
| MC 50 | | 50 | 06- | FD225 | FD224 |
| **MACBOR** | | | | | |
| 565 | | 50 | 04- | FD224 | FD065 |

| | | | | |
|---|---|---|---|---|
| 510 RACING | 50 | 04- | FD224 | FD065 |
| 512 RACING | 50 | 04- | FD224 | FD065 |
| 515 RACING | 50 | 04- | FD224 | FD065 |
| **METRAKIT** | | | | |
| FUN 2 STROKE | 50 | 05- | FD065 | FD224 |
| FUN 4 STROKE | 50 | 05- | FD065 | FD224 |
| MINI GP | 50 | 03- | FD065 | FD224 |
| MINI GP 50 R | 50 | 08- | FD360 | FD224 |
| MINI GP XL | 50 | 05- | FD220 | FD224 |
| MINI GP 70 R | 70 | 08- | FD360 | FD224 |
| MINI GP SP 70 | 70 | 08- | FD200 | FD224 |
| MINI GP XL 80 PRO | 80 | 04- | FD223 | FD224 |
| MINI GP XL 80 R | 80 | 08- | FD341 | FD224 |
| XL 08 | 80 | 08- | FD360 | FD224 |
| PRE GP 125 | 125 | 07- | FD341 | FD224 |
| POLINI | | | | |
| XP 4 STREET 50 | 50 | 08- | FD224 | FD224 |
| XP 4T MINIMOTARD | 100 | 08- | FD224 | FD224 |
| XP 4 STREET 125 | 125 | 08- | FD224 | FD224 |

## FD 225

mm: 56,8 x 44,3 | 6,5 | A | A

G1054 | G1050 | G1805

| BRAND MARCA | MODEL MODELO | C.C. | YEAR | FRONT | REAR |
|---|---|---|---|---|---|
| **GAS GAS** | | | | | |
| EC ENDUCROSS BOY | | 50 | 99-05 | FD225 | FD225 |
| EC ENDUCROSS BOY | | 50 | 06- | FD225 | FD224 |
| EC ROOKIE | | 50 | 01- | FD133 | FD225 |
| MC 50 | | 50 | 06- | FD225 | FD224 |
| SM 50 | | 50 | 05- | FD162 | FD225 |
| SM ROOKIE | | 50 | 01-04 | FD133 | FD225 |
| TXT BOY | | 50 | 99-02 | FD225 | FD225 |
| TXT ROOKIE | | 50 | 03- | FD225 | FD225 |
| 125 PAMPERA | | 125 | 03- | FD162 | FD225 |

## FD 228

mm: 50,9 x 53,5 | 9,3 | A | A

G1054 | G1050 | G1380

| BRAND MARCA | MODEL MODELO | C.C. | YEAR | FRONT | REAR |
|---|---|---|---|---|---|
| **APRILIA** | | | | | |
| SCARABEO DITECH 50 | | 50 | 02- | FD153 | FD228 |
| SR 50 FACTORY | | 50 | 05- | FD153 | FD228 |
| SR 50 R | | 50 | 05- | FD153 | FD228 |
| SR 50 RACING CATALIZADA | | 50 | 00- | FD232 | FD228 |
| ARRECIFE 125 | | 125 | 03-05 | FD245 | FD228 |
| ARRECIFE 125 SPRINT | | 125 | 06- | FD245 | FD228 |
| ATLANTIC 125 | | 125 | 03-05 | FD245 | FD228 |
| ATLANTIC 125 SPRINT | | 125 | 06- | FD245 | FD228 |
| RS 125 | | 125 | 06- | FD367 | FD228 |
| SCARABEO 125 4T | | 125 | 98-04 | FD074 | FD228 |
| SCARABEO 125 4T | | 125 | 05- | FD245 | FD228 |
| SPORT CITY 125 | | 125 | 04- | FD074 | FD228 |
| **DERBI** | | | | | |
| BOULERVARD S | | 125 | 07- | FD074 | FD228 |
| RAMBLA 125 | | 125 | 07- | FD074 | FD228 |
| **MALAGUTI** | | | | | |
| F 18 WARRIOR | | 125 | 00-03 | FD153 | FD228 |
| MADISON 125 | | 125 | 99-05 | FD162 | FD228 |
| MADISON 125 R 125 | | 125 | 06-06 | FD074 | FD228 |
| **SCARABEO** | | | | | |
| 125 ie | | 125 | 15- | FD245 | FD228 |

## FD 230

mm: 43,3 x 25,9 | 5,1 | A | A[1]

G1054 | G1396

| BRAND MARCA | MODEL MODELO | C.C. | YEAR | FRONT | REAR |
|---|---|---|---|---|---|
| **KTM** | | | | | |
| 50 SM | | 50 | 06- | FD230 | FD230 |
| **METRAKIT** | | | | | |
| BIG FOOT | | 50 | 08- | FD265 | FD230 |
| MONGOOSE | | 50 | 08- | FD265 | FD230 |
| PRO | | 50 | 08- | FD265 | FD230 |

## FD 232

mm: 39,8 x 56,3 | 8,0 | A | A

G1054 | G1050

| BRAND MARCA | MODEL MODELO | C.C. | YEAR | FRONT | REAR |
|---|---|---|---|---|---|
| **APRILIA** | | | | | |
| SR 50 RACING CATALIZADA | | 50 | 00- | FD232 | FD228 |
| LEONARDO 125 4T | | 125 | 99- | FD232 | FD234 |

## FD 234

mm: 54,0 x 50,7 | 7,0 | A | A

G1054 | G1050

| BRAND MARCA | MODEL MODELO | C.C. | YEAR | FRONT | REAR |
|---|---|---|---|---|---|
| **APRILIA** | | | | | |
| SCARABEO 4 T | | 50 | 04- | FD234 | MF630 |
| SCARABEO 100 4T | | 100 | 04- | FD234 | MF630 |
| HABANA | | 125 | 00-02 | FD234 | MF |
| HABANA CUSTOM | | 125 | 00-02 | FD234 | MF |
| LEONARDO 125 4T | | 125 | 99- | FD232 | FD234 |
| SR 125 | | 125 | 98- | FD234 | MF |

## FD 245

mm: 117,5 x 40,0 | 8,4 | A | A[1]

G1054 | G1050 | G1380

| BRAND MARCA | MODEL MODELO | C.C. | YEAR | FRONT | REAR |
|---|---|---|---|---|---|
| **APRILIA** | | | | | |
| ARRECIFE 125 | | 125 | 03-05 | FD245 | FD228 |
| ARRECIFE 125 SPRINT | | 125 | 06- | FD245 | FD228 |
| ATLANTIC 125 | | 125 | 03-05 | FD245 | FD228 |
| ATLANTIC 125 SPRINT | | 125 | 06- | FD245 | FD228 |
| SCARABEO 125 4T | | 125 | 05- | FD245 | FD228 |
| **KYMCO** | | | | | |
| DOWNTOWN | | 125 | 15- | FD245 | FD438 |
| **PEUGEOT** | | | | | |
| LOOXOR | | 125 | 05- | FD245 | FD270 |
| **SCARABEO** | | | | | |
| 125 ie | | 125 | 15- | FD245 | FD228 |

## FD 252

mm: 56,0 x 36,0 | 10,2 | A | B

mm: 88,0 x 49,0 | 7,6 | A | B

G1054 | G1050

| BRAND MARCA | MODEL MODELO | C.C. | YEAR | FRONT | REAR |
|---|---|---|---|---|---|
| **APRILIA** | | | | | |
| RS 4 50 | | 50 | 11- | FD341 | FD252 |
| RS 4 125 | | 125 | 11- | FD341 | FD252 |
| RX 125 (AJP) | | 125 | 08- | FD138 | FD252 |
| **DERBI** | | | | | |
| GPR 50 R | | 50 | 10- | FD341 | FD252 |
| GPR 125 4T 4V | | 125 | 09- | FD341 | FD252 |
| GPR 125 R | | 125 | 09- | FD341 | FD252 |
| MULHACEN 125 | | 125 | 06- | FD409 | FD252 |
| MULHACEN CAFÉ 125 | | 125 | 08- | FD341 | FD252 |
| SENDA DRD 125 R 4T 4V | | 125 | 09- | FD220 | FD252 |
| TERRA 4T 125 | | 125 | 06- | FD409 | FD252 |
| TERRA 4T 125 ADVENTURE | | 125 | 08- | FD409 | FD252 |
| **KEEWAY** | | | | | |
| SPEED 125 | | 125 | 07- | FD252 | FD252 |
| **MOTORHISPANIA** | | | | | |
| RX 50 R | | 50 | 08- | FD341 | FD252 |
| DUNA SPORT CITY | | 125 | 09- | FD162 | FD252 |
| KN 1 NAKED | | 125 | 10- | FD341 | FD252 |
| KN 2 NAKED | | 125 | 14- | FD341 | FD252 |
| MH 7 NAKED | | 125 | 07- | FD341 | FD252 |
| RX 125 R | | 125 | 08- | FD341 | FD252 |
| **PEUGEOT** | | | | | |
| NK 7 | | 50 | 10- | FD341 | FD252 |
| XR 7 | | 50 | 10- | FD341 | FD252 |
| **RIEJU** | | | | | |
| MRT 50 | | 50 | 09- | FD252 | FD252 |
| MRT PRO 50 | | 50 | 09- | FD220 | FD252 |
| MRT SM 50 | | 50 | 09- | FD252 | FD252 |
| MRT SM PRO 50 | | 50 | 09- | FD220 | FD252 |
| RS-3 | | 50 | 11- | FD297 | FD252 |
| TANGO 50 | | 50 | 09- | FD252 | FD065 |
| MARATHON PRO 125 SM | | 125 | 09- | FD220 | FD252 |
| RS-3 | | 125 | 10-12 | FD341 | FD252 |
| **TGB** | | | | | |
| 409 F | | 50 | 06- | FD252 | MF641 |
| 42 RACING 50 | | 50 | 06- | FD252 | MF453 |
| R 50 X | | 50 | 06- | FD252 | MF |
| 409 F | | 125 | 06- | FD252 | MF453 |
| 42 RACING 125 | | 125 | 06- | FD252 | MF453 |

## FD 259

mm: 91,5 x 40,0 | 10,0 | A | B

mm: 107,0 x 42,5 | 10,0 | A | B

G1054 | G1050

| BRAND MARCA | MODEL MODELO | C.C. | YEAR | FRONT | REAR |
|---|---|---|---|---|---|
| **HONDA** | | | | | |
| CBR 125 R | | 125 | 04-10 | FD298 | FD259 |
| XL 125 V VARADERO | | 125 | 01- | FD145 | FD259 |
| **HONDA INDONESIA** | | | | | |
| NEW BLADE R 110 | | 110 | 12- | | FD259 |
| NEW BLADE RACING EDITION 110 | | 110 | 12- | | FD259 |
| NEW BLADE S 110 | | 110 | 12- | | FD259 |
| CBR 125 R | | 125 | 11- | FD298 | FD259 |
| CITY SPORT ONE | | 125 | 11- | FD145 | FD259 |
| SUPRA - X 125 PGM FI | | 125 | 10- | | FD259 |



For other models years previous to 1990 visit **www.galferonline.es** - Para otros modelos anteriores al año 1990 visitar **www.galferonline.es**
For consult TÜV (ABE) type approvals visit **www.galfermoto.com --> DOWNALOAD --> TÜV CERTIFICATIONS** - Para consultar las homologaciones TÜV (ABE) visitar **www.galfermoto.com --> DESCARGAS --> CERTIFICACIONES TÜV**

| | | | | |
|---|---|---|---|---|
| SUPRA - X 125 R | 125 | 10- | | FD259 |
| **HONDA MALASIA** | | | | |
| WAVE 110 | 110 | 12- | FD259 | MF |
| WAVE DASH 110 | 110 | 12- | FD259 | MF |
| WAVE DASH SE 110 | 110 | 12- | FD259 | MF |
| FUTURE 125 DD | 125 | 12- | FD259 | |
| FUTURE 125 DT | 125 | 12- | FD259 | MF |
| FUTURE 125 DT SPOKE WHEEL | 125 | 12- | FD259 | MF |
| **SUZUKI INDONESIA** | | | | |
| SHOGUN AXELO 125 | 125 | 12- | | FD259 |
| SHOGUN AXELO R 125 | 125 | 12- | | FD259 |
| SHOGUN AXELO S 125 | 125 | 12- | | FD259 |
| SHOGUN AXELO SE 125 | 125 | 12- | | FD259 |
| SHOGUN FD 125 | 125 | 09- | FD117 | FD259 |
| SHOGUN FI 125 | 125 | 09- | FD117 | FD259 |
| SHOGUN RR 125 | 125 | 09- | FD117 | FD259 |
| SHOGUN SP125 | 125 | 09- | FD117 | FD259 |
| SKYDRIVE DYNAMIC | 125 | 12- | FD259 | MF |
| SKYDRIVE SPECIAL EDITION | 125 | 12- | FD259 | MF |
| SPIN 125 | 125 | 10- | FD259 | MF |
| **SUZUKI MALASIA** | | | | |
| SHOGUN AXELO 125 | 125 | 12- | | FD259 |
| SHOGUN RR 125 | 125 | 09- | FD117 | FD259 |
| SHOGUN SP125 | 125 | 09- | FD117 | FD259 |
| SKYDRIVE | 125 | 12- | FD259 | MF |
| SKYDRIVE SPECIAL EDITION | 125 | 12- | FD259 | MF |
| **YAMAHA** | | | | |
| TRICITY | 125 | 14- | | FD259 |

## FD 261

mm: 64,1 x 36,8 — A / B
mm: 85,0 x 44,0 — A / B

G1054 | G1050 | G1397 |

| BRAND MARCA | MODEL MODELO | C.C. | YEAR | FRONT | REAR |
|---|---|---|---|---|---|
| **KYMCO** | | | | | |
| AGILITY CARRY 50 | | 50 | 14- | FD261 | MF |
| PEOPLE | | 50 | 99- | FD261 | MF740 |
| SUPER 8 2T | | 50 | 14- | FD261 | MF |
| SUPER 8 4T | | 50 | 14- | FD261 | MF |
| SUPER 9 | | 50 | 00- | FD145 | FD261 |
| AGILITY CITY 125 | | 125 | 09- | FD261 | FD075 |
| PEOPLE | | 125 | 99- | FD261 | MF740 |
| SUPER 8 | | 125 | 14- | FD261 | MF |
| SUPER 9 | | 125 | 00- | FD145 | FD261 |
| **SYM** | | | | | |
| JOYRIDE | | 125 | 01- | FD412 | FD261 |

## FD 262

mm: 35,0 x 40,5 — A (4x)

G1054 | G1370 | G1375 | G1003 | G1300

| BRAND MARCA | MODEL MODELO | C.C. | YEAR | FRONT | REAR |
|---|---|---|---|---|---|
| **TM** | | | | | |
| SMM 125 | | 125 | 14- | FD262 | FD012 |
| SMR 125 | | 125 | 14- | FD262 | FD286 |

## FD 263

mm: 55,5 x 49,0 — A / A

G1054 |

| BRAND MARCA | MODEL MODELO | C.C. | YEAR | FRONT | REAR |
|---|---|---|---|---|---|
| **BENELLI** | | | | | |
| ADIVA | | 125 | 00- | FD153 | FD263 |
| **GILERA-PIAGGIO** | | | | | |
| DNA 125 (G) | | 125 | 01- | FD162 | FD263 |
| DNA 125 (H) | | 125 | 01- | FD277 | FD263 |
| RUNNER 125 VX (G) | | 125 | 01- | FD162 | FD263 |
| RUNNER 125 VX (H) | | 125 | 01- | FD277 | FD263 |
| **PIAGGIO** | | | | | |
| HEXAGON GTX 125 (G) | | 125 | 00-00 | FD162 | FD263 |
| HEXAGON GTX 125 (H) | | 125 | 00-00 | FD277 | FD263 |
| SUPER HEXAGON GTX 125 (G) | | 125 | 01- | FD162 | FD263 |
| SUPER HEXAGON GTX 125 (H) | | 125 | 01- | FD277 | FD263 |
| VESPA 946 | | 125 | 13- | FD277 | FD263 |
| VESPA GRAN TURISMO (G) | | 125 | 03- | FD162 | FD263 |
| VESPA GRAN TURISMO (H) | | 125 | 03- | FD277 | FD263 |
| VESPA GTV 125 | | 125 | 06- | FD277 | FD263 |

## FD 265

mm: 61,5 x 31,1 — A / A[1]

G1054 | G1396 |

| BRAND MARCA | MODEL MODELO | C.C. | YEAR | FRONT | REAR |
|---|---|---|---|---|---|
| **METRAKIT** | | | | | |
| BIG FOOT | | 50 | 08- | FD265 | FD230 |
| MONGOOSE | | 50 | 08- | FD265 | FD230 |
| PRO | | 50 | 08- | FD265 | FD230 |

## FD 266

mm: 102,1 x 38,7 — A / A[1]

G1054 | G1050 | G1370 | G1375 | G1380

| BRAND MARCA | MODEL MODELO | C.C. | YEAR | FRONT | REAR |
|---|---|---|---|---|---|
| **HONDA** | | | | | |
| CB 50 | | 50 | 95- | FD266 | MF003 |
| FORZA 125 | | 125 | 15- | FD266 | FD345 |
| RS 125 R | | 125 | 90-92 | FD266 | FD113 |
| SH 125 i SCOOPY CBS | | 125 | 13- | FD266 | FD345 |
| **KYMCO** | | | | | |
| DOWNTOWN | | 125 | 09-14 | FD266 | FD438 |
| K-XCT | | 125 | 13- | FD266 | FD474 |
| SUPER DINK 125i | | 125 | 09- | FD266 | FD438 |
| YAGER GT 125 | | 125 | 13- | FD266 | FD438 |
| **SUMCO** | | | | | |
| 125 ST | | 125 | 05- | FD266 | MF |
| **YAMAHA** | | | | | |
| WR 125 X | | 125 | 09- | FD266 | FD165 |
| X - MAX 125 | | 125 | 10- | FD266 | FD214 |
| X - MAX 125 ABS | | 125 | 10- | FD266 | FD214 |

## FD 270

mm: 50,0 x 47,2 — A / A

G1054 | G1050 | G1380 |

| BRAND MARCA | MODEL MODELO | C.C. | YEAR | FRONT | REAR |
|---|---|---|---|---|---|
| **DERBI** | | | | | |
| RAMBLA 50 | | 50 | 06- | FD270 | FD270 |
| SENDA PRO | | 50 | 08- | FD220 | FD270 |
| BOULEVARD | | 125 | 03-06 | FD270 | MF |
| CROSS CITY | | 125 | 09- | FD409 | FD270 |
| **ITALJET** | | | | | |
| JET SET | | 50 | 02- | FD270 | MF |
| MILLENNIUM 100 | | 100 | 02- | FD270 | MF |
| JET SET | | 125 | 02- | FD270 | MF |
| MILLENNIUM 125 | | 125 | 02- | FD270 | MF |
| **PEUGEOT** | | | | | |
| ELISTAR AVANTAGE 2 | | 50 | 05- | FD065 | FD270 |
| ELISTAR TSDI | | 50 | 02- | FD065 | FD270 |
| ELISTAR EFI | | 125 | 02- | FD162 | FD270 |
| GEO 125 RS | | 125 | 10- | FD162 | FD270 |
| GEOPOLIS 125 (AJP) | | 125 | 06- | FD162 | FD270 |
| JET FORCE | | 125 | 03- | FD162 | FD270 |
| LOOXOR | | 125 | 05- | FD245 | FD270 |
| SATELIS 125 | | 125 | 10- | FD162 | FD270 |
| SATELIS 125 K15 (AJP) | | 125 | 06- | FD162 | FD270 |
| SATELIS 125 K15 (NISSIN) | | 125 | 07- | FD187 | FD270 |
| SATELIS 125 K15 COMPRESOR (AJP) | | 125 | 06- | FD162 | FD270 |
| SATELIS 125 K15 COMPRESOR (NISSIN) | | 125 | 07- | FD187 | FD270 |
| **RIEJU** | | | | | |
| RS-2 MATRIX | | 50 | 03-05 | FD297 | FD270 |
| RS-2 NKD | | 50 | 04-05 | FD297 | FD270 |
| RS-2 NKD | | 50 | 06- | FD297 | FD270 |
| NKD 125 | | 125 | 06- | FD297 | FD270 |
| **SHERCO** | | | | | |
| SM 1.25 F | | 125 | 10- | FD162 | FD270 |
| **YAMAHA** | | | | | |
| DT 50 R | | 50 | 05- | FD065 | FD270 |
| XT 125 R | | 125 | 05- | FD270 | FD270 |
| XT 125 X | | 125 | 05- | FD162 | FD270 |

## FD 275

mm: 44,8 x 50,8 — A / A

G1054 | G1050 | G1380 | G1397 |

| BRAND MARCA | MODEL MODELO | C.C. | YEAR | FRONT | REAR |
|---|---|---|---|---|---|
| **DAELIM** | | | | | |
| S3 125 Fi | | 125 | 11- | FD275 | FD145 |

## FD 277

mm: 77,0 x 41,2 — A / B
mm: 96,9 x 41,2 — A / B

G1054 | G1050 | G1380 |

| BRAND MARCA | MODEL MODELO | C.C. | YEAR | FRONT | REAR |
|---|---|---|---|---|---|
| **APRILIA** | | | | | |
| SPORT CITY STREET 50 | | 50 | 09- | FD277 | MF |
| **GILERA-PIAGGIO** | | | | | |
| DNA 50 (H) | | 50 | 00- | FD277 | FD200 |
| RUNNER 50 SP / PJ | | 50 | 06- | FD277 | FD200 |
| DNA 125 (H) | | 125 | 01- | FD277 | FD263 |
| NEXUS | | 125 | 07- | FD277 | FD277 |
| NEXUS i.e. | | 125 | 09- | FD277 | FD277 |
| RUNNER 125 FX (H) | | 125 | 97-98 | FD277 | MF |
| RUNNER 125 VX (H) | | 125 | 01- | FD277 | FD263 |
| **KEEWAY** | | | | | |
| K2 125 | | 125 | 07- | FD277 | FD277 |
| **PIAGGIO** | | | | | |
| FLY 50 2T | | 50 | 05- | FD277 | MF |
| FLY 50 4T | | 50 | 05- | FD277 | MF |
| LIBERTY 50 4T | | 50 | 09- | FD277 | MF |
| TYPHOON | | 50 | 11- | FD277 | MF |

| | | | | |
|---|---|---|---|---|
| FLY 100 | 100 | 07- | FD277 | MF717 |
| BEVERLY 125 | 125 | 10- | FD277 | FD277 |
| BEVERLY 125 4T (H) | 125 | 02- | FD277 | FD277 |
| CARNABY 125 | 125 | 07- | FD277 | FD277 |
| FLY 125 4T | 125 | 05- | FD277 | MF717 |
| HEXAGON GTX 125 (H) | 125 | 00-00 | FD277 | FD263 |
| HEXAGON LX 125 (H) | 125 | 98-99 | FD277 | MF |
| LIBERTY 4-T | 125 | 09- | FD277 | MF |
| SKIPPER LX (H) | 125 | 98-99 | FD277 | MF |
| SKR 125 ST 4T (H) | 125 | 00- | FD277 | MF |
| SUPER HEXAGON GTX 125 (H) | 125 | 01- | FD277 | FD263 |
| TYPHOON 4T | 125 | - | FD277 | MF |
| VESPA 946 | 125 | 13- | FD277 | FD263 |
| VESPA GRAN TURISMO (H) | 125 | 03- | FD277 | FD263 |
| VESPA GTS 125 SUPER | 125 | 09- | FD277 | FD200 |
| VESPA GTV 125 | 125 | 06- | FD277 | FD263 |
| VESPA LX 125 | 125 | 09- | FD277 | FD200 |
| VESPA LXV 125ie | 125 | 10- | FD277 | MF |
| VESPA PRIMAVERA | 125 | 15- | FD277 | MF |
| VESPA SPRINT | 125 | 15- | FD277 | MF |
| X 10 LEFT/IZQ | 125 | 12- | FD277 | |
| X 7 | 125 | 08- | FD277 | FD334 |
| X 8 | 125 | 04-05 | FD277 | FD220 |
| X 8 | 125 | 06- | FD277 | FD343 |
| X 9 EVOLUTION LEFT/IZQ. | 125 | 04-05 | FD277 | |
| X 9 EVOLUTION LEFT/IZQ. | 125 | 06- | FD277 | |
| X EVO 125 | 125 | 08- | FD277 | FD334 |

## FD 278

mm 60,0 x 44,0 | 9,4 | A | A1

G1054 | G1396

| BRAND MARCA | MODEL MODELO | C.C. | YEAR | FRONT | REAR |
|---|---|---|---|---|---|
| **HM** | | | | | |
| CRE BAJA | | 50 | 09- | FD162 | FD278 |
| CRE BAJA RR | | 50 | 09- | FD411 | FD278 |
| CRE SIX COMPETICION | | 50 | 09- | FD411 | FD278 |
| DERAPAGE | | 50 | 09- | FD162 | FD278 |
| DERAPAGE COMPETICION | | 50 | 09-10 | FD411 | FD278 |
| CRE F 125 X | | 125 | 08- | FD162 | FD278 |

## FD 284

mm 81,8 x 42,3 | 9,3 | A | A

G1054 | G1050 | G1380

| BRAND MARCA | MODEL MODELO | C.C. | YEAR | FRONT | REAR |
|---|---|---|---|---|---|
| **HONDA** | | | | | |
| @ 125 | | 125 | 00- | FD284 | MF051 |
| DYLAN 125 | | 125 | 02- | FD284 | MF051 |
| PS 125i | | 125 | 06- | FD284 | MF051 |
| SH 125 i SCOOPY | | 125 | 05-08 | FD284 | MF051 |
| SH 125 i SCOOPY (TAMBOR TRAS) | | 125 | 09-12 | FD284 | MF051 |
| SH 125 SCOOPY | | 125 | 01-04 | FD284 | MF051 |
| **ITALJET** | | | | | |
| JACK 125 | | 125 | 07- | FD284 | FD284 |
| TORPEDO 125 | | 125 | 07- | FD284 | MF |

## FD 286

mm 66,85 x 36,0 | 10,5 | A | A1

G1054 | G1396

| BRAND MARCA | MODEL MODELO | C.C. | YEAR | FRONT | REAR |
|---|---|---|---|---|---|
| **HM** | | | | | |
| DERAPAGE COMPETICION | | 50 | 11- | FD304 | FD286 |
| DERAPAGE 4T COMPETICION | | 125 | 11- | FD304 | FD286 |
| **T-RACE** | | | | | |
| T-RACE C | | EL | 15- | FD138 | FD286 |
| T-RACE E | | EL | 15- | FD138 | FD286 |
| T-RACE R | | EL | 15- | FD138 | FD286 |
| **TM** | | | | | |
| SMR 125 | | 125 | 14- | FD262 | FD286 |
| **ZERO** | | | | | |
| ZERO DS DUAL SPORT | | EL | 13- | FD164 | FD286 |
| ZERO FX STEALTHFIGHTER | | EL | 13- | FD164 | FD286 |
| ZERO MX | | EL | 13- | FD164 | FD286 |
| ZERO S STREETFIGHTER | | EL | 13- | FD164 | FD286 |
| ZERO XU URBAN CROSSER | | EL | 13- | FD164 | FD286 |

## FD 291

mm 63,9 x 42,0 | 9,5 | A | A1

G1054 | G1396

| BRAND MARCA | MODEL MODELO | C.C. | YEAR | FRONT | REAR |
|---|---|---|---|---|---|
| **T-RACE** | | | | | |
| T-RACE DIABOLICA | | EL | 15- | FD138 | FD291 |

## FD 297

mm 76,8 x 41,8 | 7,5 | A | B

mm 94,5 x 42,0 | 7,5 | A | B

G1054 | G1050

| BRAND MARCA | MODEL MODELO | C.C. | YEAR | FRONT | REAR |
|---|---|---|---|---|---|
| **RIEJU** | | | | | |
| RS-2 MATRIX | | 50 | 03-05 | FD297 | FD270 |
| RS-2 NKD | | 50 | 04-05 | FD297 | FD270 |
| RS-2 NKD | | 50 | 06- | FD297 | FD270 |
| RS-3 | | 50 | 11- | FD297 | FD252 |
| NKD 125 | | 125 | 06- | FD297 | FD270 |

## FD 298

mm 98,5 x 33,1 | 4,6 | A | B

mm 111,2 x 36,2 | 7,6 | A | B

G1054 | G1050

| BRAND MARCA | MODEL MODELO | C.C. | YEAR | FRONT | REAR |
|---|---|---|---|---|---|
| **HONDA** | | | | | |
| ANF 125 INNOVA | | 125 | 03-06 | FD298 | MF |
| ANF 125 INNOVA | | 125 | 07- | FD298 | MF |
| CBF 125 | | 125 | 09- | FD298 | MF051 |
| CBR 125 R | | 125 | 04-10 | FD298 | FD259 |
| CBR 125 R | | 125 | 11- | FD298 | |
| MSX 125 | | 125 | 13- | FD298 | FD103 |
| **HONDA INDONESIA** | | | | | |
| VARIO CW 110 | | 110 | 10- | FD298 | MF |
| CBR 125 R | | 125 | 11- | FD298 | FD259 |
| **HONDA MALASIA** | | | | | |
| WAVE 100 | | 100 | 10- | FD298 | MF |
| WAVE 125 | | 125 | 10- | FD298 | MF |
| **RIEJU** | | | | | |
| RS-2 | | 50 | 06- | FD298 | FD094 |
| RS-2 | | 125 | 06- | FD298 | FD094 |
| RS-2 NKD | | 125 | 06- | FD298 | FD094 |

## FD 304

mm 35,0 x 46,0 | 7,6 | A (4x)

G1054 | G1375

| BRAND MARCA | MODEL MODELO | C.C. | YEAR | FRONT | REAR |
|---|---|---|---|---|---|
| **HM** | | | | | |
| DERAPAGE COMPETICION | | 50 | 11- | FD304 | FD286 |
| DERAPAGE 4T COMPETICION | | 125 | 11- | FD304 | FD286 |

## FD 315

mm 62,0 x 40,6 | 9,5 | A | B

mm 82,0 x 40,7 | 9,5 | A | B

G1054 | G1050 | G1397

| BRAND MARCA | MODEL MODELO | C.C. | YEAR | FRONT | REAR |
|---|---|---|---|---|---|
| **SUZUKI** | | | | | |
| SIXTEEN | | 125 | 08- | FD344 | FD315 |
| UH 125 BURGMAN | | 125 | 07-13 | FD344 | FD315 |
| UH 125 BURGMAN | | 125 | 14- | FD117 | FD315 |
| UH 125 BURGMAN ABS | | 125 | 14- | FD117 | FD315 |
| UH 125 BURGMAN R | | 125 | 11- | FD344 | FD315 |

## FD 334

mm 77,0 x 41,2 | 9,0 | A | B

mm 96,9 x 41,2 | 9,0 | A | B

G1054 | G1050 | G1380

| BRAND MARCA | MODEL MODELO | C.C. | YEAR | FRONT | REAR |
|---|---|---|---|---|---|
| **PIAGGIO** | | | | | |
| MP 3 125 LT | | 125 | 09- | FD200 | FD334 |
| MP 3 125 YOURBAN | | 125 | 11- | FD200 | FD334 |
| MP 3 HYBRID | | 125 | 09- | FD200 | FD334 |
| X 10 RIGHT/DER | | 125 | 12- | FD334 | FD343 |
| X 7 | | 125 | 08- | FD277 | FD334 |
| X 9 EVOLUTION RIGHT/DER. | | 125 | 04-05 | FD334 | FD220 |
| X 9 EVOLUTION RIGHT/DER. | | 125 | 06- | FD334 | FD343 |
| X EVO 125 | | 125 | 08- | FD277 | FD334 |

## FD 336

mm 73,0 x 47,0 | 10,8 | A | B

mm 94,1 x 47,0 | 8,6 | A | B

G1054 | G1397

| BRAND MARCA | MODEL MODELO | C.C. | YEAR | FRONT | REAR |
|---|---|---|---|---|---|
| **SYM** | | | | | |
| SB 125 WOLF | | 125 | 11- | FD399 | FD336 |
| WOLF SB 125 Ni | | 125 | 15- | FD399 | FD336 |



For other models years previous to 1990 visit **www.galferonline.es** · Para otros modelos anteriores al año 1990 visitar **www.galferonline.es**

For consult TÜV (ABE) type approvals visit **www.galfermoto.com --> DOWNLOAD --> TÜV CERTIFICATIONS** · Para consultar las homologaciones TÜV (ABE) visitar **www.galfermoto.com --> DESCARGAS --> CERTIFICACIONES TÜV**

| YAMAHA | | | | |
|---|---|---|---|---|
| MT 125 | 125 | 14- | FD367 | FD336 |
| YZF 125 R | 125 | 08- | FD138 | FD336 |

## FD 341

mm: 69,9 x 51,6 | 7,5 | A | A

G1054 | G1050 |

| BRAND MARCA | MODEL MODELO | C.C. | YEAR | FRONT | REAR |
|---|---|---|---|---|---|
| APRILIA | | | | | |
| RS 4 50 | | 50 | 11- | FD341 | FD252 |
| RS 4 125 | | 125 | 11- | FD341 | FD252 |
| BLATA | | | | | |
| ENDURO 125 | | 125 | 07- | FD341 | FD065 |
| CONTI | | | | | |
| RX 356 V3 | | 80 | 05- | FD341 | FD065 |
| DERBI | | | | | |
| GPR 50 R | | 50 | 10- | FD341 | FD252 |
| GPR 80 R CUP | | 80 | 04- | FD341 | FD065 |
| GPR 125 4T 4V | | 125 | 09- | FD341 | FD252 |
| GPR 125 NUDE | | 125 | 04- | FD341 | FD065 |
| GPR 125 R | | 125 | 04-08 | FD341 | FD065 |
| GPR 125 R | | 125 | 09- | FD341 | FD252 |
| MULHACEN CAFÉ 125 | | 125 | 08- | FD341 | FD252 |
| GILERA-PIAGGIO | | | | | |
| SC 125 | | 125 | 06- | FD341 | FD065 |
| METRAKIT | | | | | |
| MINI GP XL 80 R | | 80 | 08- | FD341 | FD224 |
| PRE GP 125 | | 125 | 07- | FD341 | FD224 |
| MOTORHISPANIA | | | | | |
| RX 50 R | | 50 | 08- | FD341 | FD252 |
| KN 1 NAKED | | 125 | 10- | FD341 | FD252 |
| KN 2 NAKED | | 125 | 14- | FD341 | FD252 |
| MH 7 NAKED | | 125 | 07- | FD341 | FD252 |
| RX 125 R | | 125 | 08- | FD341 | FD252 |
| PEUGEOT | | | | | |
| NK 7 | | 50 | 10- | FD341 | FD252 |
| XR 7 | | 50 | 08-09 | FD341 | FD065 |
| XR 7 | | 50 | 10- | FD341 | FD252 |
| RIEJU | | | | | |
| RS-3 | | 125 | 10-12 | FD341 | FD252 |
| RS-3 | | 125 | 13- | FD341 | FD075 |
| RS-3 NKD | | 125 | 13- | FD341 | FD075 |

## FD 342

mm: 77,0 x 41,2 | 9,4 | A | A

G1054 | G1050 |

| BRAND MARCA | MODEL MODELO | C.C. | YEAR | FRONT | REAR |
|---|---|---|---|---|---|
| MBK MOTOBEKANE | | | | | |
| FLAME X | | 125 | 04- | FD342 | MF458 |
| YAMAHA | | | | | |
| CIGNUS 125 X | | 125 | 03-06 | FD342 | MF458 |
| CIGNUS 125 X i | | 125 | 07- | FD342 | MF458 |

## FD 343

mm: 55,3 x 52,1 | 7,6 | A | A

G1054 | G1050 | G1380 |

| BRAND MARCA | MODEL MODELO | C.C. | YEAR | FRONT | REAR |
|---|---|---|---|---|---|
| PIAGGIO | | | | | |
| MP 3 125 | | 125 | 06-08 | FD200 | FD343 |
| X 10 RIGHT/DER | | 125 | 12- | FD334 | FD343 |
| X 8 | | 125 | 06- | FD277 | FD343 |
| X 9 EVOLUTION RIGHT/DER. | | 125 | 06- | FD334 | FD343 |

## FD 344

mm: 118,0 x 45,2 | 9,2 | A | A[1]

G1054 | G1050 | G1370 | G1375 | G1380 |

| BRAND MARCA | MODEL MODELO | C.C. | YEAR | FRONT | REAR |
|---|---|---|---|---|---|
| HONDA | | | | | |
| S WING 125 / ABS | | 125 | 07- | FD344 | FD345 |
| SH 125 i SCOOPY (D-D) | | 125 | 09-12 | FD344 | FD345 |
| SH 125 i SCOOPY ABS | | 125 | 13- | FD344 | FD345 |
| KYMCO | | | | | |
| PEOPLE GTI 125 | | 125 | 10- | FD344 | FD399 |
| SUZUKI | | | | | |
| SIXTEEN | | 125 | 08- | FD344 | FD315 |
| UH 125 BURGMAN | | 125 | 07-13 | FD344 | FD315 |
| UH 125 BURGMAN R | | 125 | 11- | FD344 | FD315 |

## FD 345

mm: 81,7 x 37,7 | 8,8 | A | A

G1054 | G1050 | G1380 |

| BRAND MARCA | MODEL MODELO | C.C. | YEAR | FRONT | REAR |
|---|---|---|---|---|---|
| HONDA | | | | | |
| FORZA 125 | | 125 | 15- | FD266 | FD345 |
| S WING 125 / ABS | | 125 | 07- | FD344 | FD345 |
| SH 125 i SCOOPY (D-D) | | 125 | 09-12 | FD344 | FD345 |
| SH 125 i SCOOPY ABS | | 125 | 13- | FD344 | FD345 |
| SH 125 i SCOOPY CBS | | 125 | 13- | FD266 | FD345 |

## FD 355

mm: 94,0 x 39,9 | 7,5 | A | A[1]

G1054 | G1050 | G1380 |

| BRAND MARCA | MODEL MODELO | C.C. | YEAR | FRONT | REAR |
|---|---|---|---|---|---|
| MBK MOTOBEKANE | | | | | |
| CITYLINER | | 125 | 09- | FD355 | FD220 |
| SKYCRUISER | | 125 | 06-09 | FD355 | FD220 |
| YAMAHA | | | | | |
| MAJESTY S | | 125 | 15- | FD355 | |
| X - MAX 125 | | 125 | 06-09 | FD355 | FD220 |

## FD 360

mm: 55,5 x 42,0 | 7,0 | A | A

G1054 |

| BRAND MARCA | MODEL MODELO | C.C. | YEAR | FRONT | REAR |
|---|---|---|---|---|---|
| METRAKIT | | | | | |
| MINI GP 50 R | | 50 | 08- | FD360 | FD224 |
| MINI GP 70 R | | 70 | 08- | FD360 | FD224 |
| XL 08 | | 80 | 08- | FD360 | FD224 |

## FD 362

mm: 75,6 x 41,1 | 8,2 | A | B

mm: 99,0 x 39,8 | 7,5 | A | B

G1054 | G1396 |

| BRAND MARCA | MODEL MODELO | C.C. | YEAR | FRONT | REAR |
|---|---|---|---|---|---|
| SUZUKI INDONESIA | | | | | |
| TITAN 115 R | | 115 | 11- | FD362 | MF |
| TITAN 115 SR | | 115 | 11- | FD362 | MF |
| SUZUKI MALASIA | | | | | |
| SMASH V 125 | | 115 | 11- | FD362 | MF |

## FD 367

mm: 68,6 x 55,6 | 8,8 | A | A

G1054 | G1375 |

| BRAND MARCA | MODEL MODELO | C.C. | YEAR | FRONT | REAR |
|---|---|---|---|---|---|
| APRILIA | | | | | |
| RS 125 | | 125 | 06- | FD367 | FD228 |
| YAMAHA | | | | | |
| MT 125 | | 125 | 14- | FD367 | FD336 |

## FD 393

mm: 95,6 x 36,9 | 8,4 | A | B

mm: 109,6 x 51,2 | 8,4 | A | B

G1054 | G1050 | G1370 |

| BRAND MARCA | MODEL MODELO | C.C. | YEAR | FRONT | REAR |
|---|---|---|---|---|---|
| YAMAHA | | | | | |
| D'ELIGHT | | 125 | 14- | FD393 | MF |
| VITY 125 | | 125 | 08- | FD393 | MF |
| YBR 125 | | 125 | 07- | FD393 | MF640 |
| YBR 125 CUSTOM | | 125 | 08- | FD393 | MF640 |
| YAMAHA BRASIL | | | | | |
| YBR 125 | | 125 | 09- | FD393 | MF |
| YAMAHA INDONESIA | | | | | |
| VEGA R - T 110 LSE | | 110 | 06- | FD393 | MF |
| JUPITER Z - T 115 SE | | 115 | 10- | FD393 | MF |
| JUPITER Z - T 115 SEC | | 115 | 10- | FD393 | MF |
| LEXAN - TK 115 C | | 115 | 10- | FD393 | MF |
| MIO AL 115 C | | 115 | 08- | FD393 | MF |
| MIO AL 115 J | | 115 | 08- | FD393 | MF |
| MIO AL 115 S | | 115 | 08- | FD393 | MF |
| MIO SOUL AL 115 C | | 115 | 08- | FD393 | MF |
| MIO SPORTY AL 115 C | | 115 | 09- | FD393 | MF |
| VEGA ZR T 115 | | 115 | 09- | FD393 | MF |
| VEGA ZR T 115 LE | | 115 | 10- | FD393 | MF |
| VEGA ZR T 115 LSE | | 115 | 10- | FD393 | MF |
| BYSON FZ 16 | | 125 | 10- | FD393 | MF |
| XENON AL 125 | | 125 | 10- | FD393 | MF |
| XENON AL 125 C | | 125 | 11- | FD393 | MF |
| YAMAHA MALASIA | | | | | |
| 125 ZR | | 125 | 12- | FD393 | MF |

## FD 399

mm: 94,0 x 36,1 | 10,1 | A | A

G1054 | G1050 | G1380 |

| BRAND MARCA | MODEL MODELO | C.C. | YEAR | FRONT | REAR |
|---|---|---|---|---|---|
| **KYMCO** | | | | | |
| | GS 125i | 125 | 10- | FD399 | FD399 |
| | MOVIE 125 S i | 125 | 09- | FD399 | MF740 |
| | PEOPLE GTI 125 | 125 | 10- | FD344 | FD399 |
| **PEUGEOT** | | | | | |
| | LXR 50 | 50 | 10- | FD188 | FD399 |
| | LXR 125 | 125 | 10- | FD162 | FD399 |
| **SYM** | | | | | |
| | B9A 125 | 125 | 10- | FD399 | MF |
| | CEVALO 125 | 125 | 10- | FD399 | MF |
| | CITYCOM 125 | 125 | 09- | FD188 | FD399 |
| | GTS 125 | 125 | 07- | FD399 | FD399 |
| | HD 125 EVO | 125 | 06- | FD188 | FD399 |
| | HD 2 125 CBS | 125 | 15- | FD188 | FD399 |
| | SB 125 WOLF | 125 | 11- | FD399 | FD336 |
| | WOLF SB 125 Ni | 125 | 15- | FD399 | FD336 |
| **TGB** | | | | | |
| | X - MOTION 125 | 125 | 08- | | FD399 |

## FD 409

mm: 98,5 x 33,1 | 7,6 | A | B

mm: 111,2 x 36,1 | 7,6 | A | B

G1054 | G1396 |

| BRAND MARCA | MODEL MODELO | C.C. | YEAR | FRONT | REAR |
|---|---|---|---|---|---|
| **DERBI** | | | | | |
| | CROSS CITY | 125 | 09- | FD409 | FD270 |
| | MULHACEN 125 | 125 | 06- | FD409 | FD252 |
| | TERRA 4T 125 | 125 | 06- | FD409 | FD252 |
| | TERRA 4T 125 ADVENTURE | 125 | 08- | FD409 | FD252 |
| **RIEJU** | | | | | |
| | MARATHON PRO 125 COMPETICION | 125 | 11- | FD409 | FD456 |
| | TANGO 125 | 125 | 11- | FD409 | FD065 |

## FD 411

mm: 74,5 x 41,5 | 7,1 | A | A[1]

G1054 |

| BRAND MARCA | MODEL MODELO | C.C. | YEAR | FRONT | REAR |
|---|---|---|---|---|---|
| **HM** | | | | | |
| | CRE BAJA RR | 50 | 09- | FD411 | FD278 |
| | CRE SIX COMPETICION | 50 | 09- | FD411 | FD278 |
| | DERAPAGE COMPETICION | 50 | 09-10 | FD411 | FD278 |

## FD 412

mm: 70,0 x 42,0 | 8,0 | A | A

G1380 |

| BRAND MARCA | MODEL MODELO | C.C. | YEAR | FRONT | REAR |
|---|---|---|---|---|---|
| **SYM** | | | | | |
| | SHARK 50 | 50 | 00- | FD412 | MF |
| | EURO MX | 125 | 02- | FD412 | MF |
| | EURO MX DD | 125 | 06- | FD412 | MF |
| | HUSKY | 125 | 99- | FD412 | MF641 |
| | JOYRIDE | 125 | 01- | FD412 | FD261 |
| | RS 125 | 125 | 04- | FD412 | FD145 |
| | SHARK 125 | 125 | 99- | FD412 | MF |
| | VS 125 | 125 | 06- | FD412 | MF |

## FD 438

mm: 90,0 x 33,3 | 9,8 | A | A

G1054 | G1380 |

| BRAND MARCA | MODEL MODELO | C.C. | YEAR | FRONT | REAR |
|---|---|---|---|---|---|
| **KYMCO** | | | | | |
| | DOWNTOWN | 125 | 09-14 | FD266 | FD438 |
| | DOWNTOWN | 125 | 15- | FD245 | FD438 |
| | SUPER DINK 125i | 125 | 09- | FD266 | FD438 |
| | YAGER GT 125 | 125 | 13- | FD266 | FD438 |

## FD 439

mm: 108,6 x 41,0 | 8,0 | A | B

mm: 111,2 x 45,0 | 8,0 | A | B

G1054 | G1050 | G1383 |

| BRAND MARCA | MODEL MODELO | C.C. | YEAR | FRONT | REAR |
|---|---|---|---|---|---|
| **HONDA** | | | | | |
| | NSC 50 AC | 50 | 13- | FD439 | MF051 |
| | NSC 50 C | 50 | 13- | FD439 | MF051 |
| | NSC 50 R | 50 | 13- | FD439 | MF051 |
| | VISION 50 | 50 | 12- | FD439 | MF051 |
| | VISION 110 AC | 110 | 11- | FD439 | MF051 |
| | VISION 110 WHB | 110 | 11- | FD439 | MF051 |
| | PCX 125 | 125 | 10- | FD439 | MF051 |
| | SH 125 MODE | 125 | 13- | FD439 | MF051 |
| **HONDA INDONESIA** | | | | | |
| | PCX 125 | 125 | 10- | FD439 | MF051 |

## FD 441

mm: 41,0 x 42,3 | 7,3 | A | A

G1396 |

| BRAND MARCA | MODEL MODELO | C.C. | YEAR | FRONT | REAR |
|---|---|---|---|---|---|
| **HUSQVARNA** | | | | | |
| | E-go | EL | 12- | FD138 | FD441 |
| **KTM** | | | | | |
| | FREERIDE | EL | 12-14 | FD458 | FD441 |
| | FREERIDE E-SX | EL | 15- | FD458 | FD441 |
| | FREERIDE E-XC | EL | 15- | FD458 | FD441 |

## FD 450

mm: 69,5 x 45,2 | 8,8 | A | A

G1054 |

| BRAND MARCA | MODEL MODELO | C.C. | YEAR | FRONT | REAR |
|---|---|---|---|---|---|
| **KTM** | | | | | |
| | 125 DUKE | 125 | 11- | FD450 | FD165 |
| | 125 DUKE ABS | 125 | 14- | FD450 | FD165 |
| | RC 125 | 125 | 14- | FD450 | FD165 |

## FD 456

mm: 66,9 x 36,0 | 9,0 | A | A[1]

G1054 |

| BRAND MARCA | MODEL MODELO | C.C. | YEAR | FRONT | REAR |
|---|---|---|---|---|---|
| **BETA** | | | | | |
| | RR ENDURO | 50 | 08- | FD162 | FD456 |
| | RR MOTARD | 50 | 08- | FD162 | FD456 |
| | ALP 125 | 125 | 08- | FD162 | FD456 |
| | RR 125 4T | 125 | 06- | FD162 | FD456 |
| | RR ENDURO | 125 | 08- | FD162 | FD456 |
| | URBAN 125 | 125 | 08- | FD162 | FD456 |
| **RIEJU** | | | | | |
| | MARATHON PRO 125 COMPETICION | 125 | 11- | FD409 | FD456 |

## FD 458

mm: 59 x 38,5 | 7,3 | A | A

G1054 | G1805 | G1396 |

| BRAND MARCA | MODEL MODELO | C.C. | YEAR | FRONT | REAR |
|---|---|---|---|---|---|
| **KTM** | | | | | |
| | FREERIDE | EL | 12-14 | FD458 | FD441 |
| | FREERIDE E-SX | EL | 15- | FD458 | FD441 |
| | FREERIDE E-XC | EL | 15- | FD458 | FD441 |

## FD 473

mm: 109 x 50,5 | 9,0 | A | B

mm: 113,5 x 41 | 9,0 | A | B

G1380 |

| BRAND MARCA | MODEL MODELO | C.C. | YEAR | FRONT | REAR |
|---|---|---|---|---|---|
| **MBK MOTOBEKANE** | | | | | |
| | X - OVER | 125 | 10- | FD473 | MF458 |
| **YAMAHA** | | | | | |
| | BW'S 125 | 125 | 10- | FD473 | MF458 |
| | X - ENTER | 125 | 12- | FD473 | MF |

## FD 474

mm: 94 x 36 | 10,5 | A | A

G1380 |

| BRAND MARCA | MODEL MODELO | C.C. | YEAR | FRONT | REAR |
|---|---|---|---|---|---|
| **KYMCO** | | | | | |
| | K-XCT | 125 | 13- | FD266 | FD474 |



For other models years previous to 1990 visit **www.galferonline.es** · Para otros modelos anteriores al año 1990 visitar **www.galferonline.es**
For consult TÜV (ABE) type approvals visit **www.galfermoto.com --> DOWNLOAD --> TÜV CERTIFICATIONS** · Para consultar las homologaciones TÜV (ABE) visitar **www.galfermoto.com --> DESCARGAS --> CERTIFICACIONES TÜV**

**DF 006 W** — øext. 296 mm / øint. 144 — 4,0 — OE

| BRAND MARCA | MODEL MODELO | C.C. | YEAR | FRONT | REAR |
|---|---|---|---|---|---|
| **HONDA** | | | | | |
| | S WING 125 / ABS | 125 | 07- | DF006 | |

**DF 007 W** — øext. 240 mm / øint. 105 — 4,0 — OE

**DF 007 WS** — øext. 280 mm / øint. 105 — 4,0 — SP035

| BRAND MARCA | MODEL MODELO | C.C. | YEAR | FRONT | REAR |
|---|---|---|---|---|---|
| **HONDA** | | | | | |
| | FORZA 125 | 125 | 15- | DF083 | DF007 |
| | PANTHEON 125 | 125 | 98-02 | DF007 | - |
| | PANTHEON 125 | 125 | 03- | DF007 | DF013 |
| | SH 125 i SCOOPY (D-D) | 125 | 09-12 | DF007 | DF007 |
| | SH 125 i SCOOPY ABS | 125 | 13- | DF007 | DF007 |
| | SH 125 i SCOOPY CBS | 125 | 13- | DF007 | DF007 |
| **KEEWAY** | | | | | |
| | OUTLOOK 125 | 125 | 07- | DF007 | |

**DF 010 W** — øext. 220 mm / øint. 105 — 4,0 — OE

| BRAND MARCA | MODEL MODELO | C.C. | YEAR | FRONT | REAR |
|---|---|---|---|---|---|
| **HM** | | | | | |
| | CRE F 125 X | 125 | 08- | | DF010 |

**DF 012 CW** — øext. 296 mm / øint. 58 — 4,0 / 17,0 — OE

| BRAND MARCA | MODEL MODELO | C.C. | YEAR | FRONT | REAR |
|---|---|---|---|---|---|
| **HONDA** | | | | | |
| | RS 125 R | 125 | 90-92 | DF012 | DF019 |
| | RS 125 R | 125 | 93- | DF012 | DF019 |

**DF 013 W** — øext. 220 mm / øint. 105 — 5,0 — OE

| BRAND MARCA | MODEL MODELO | C.C. | YEAR | FRONT | REAR |
|---|---|---|---|---|---|
| **HONDA** | | | | | |
| | PANTHEON 125 | 125 | 03- | DF007 | DF013 |

**DF 015 W** — øext. 220 mm / øint. 89 — 3,5 — OE

| BRAND MARCA | MODEL MODELO | C.C. | YEAR | FRONT | REAR |
|---|---|---|---|---|---|
| **HONDA** | | | | | |
| | SH 50 SCOOPY | 50 | 96- | DF015 | - |
| | SH 100 SCOOPY | 100 | 96- | DF015 | - |
| **MBK MOTOBEKANE** | | | | | |
| | FLIPPER | 50 | 99- | DF015 | - |
| **YAMAHA** | | | | | |
| | WHY YH 50 | 50 | 98- | DF015 | - |

**DF 017 W** — øext. 240 mm / øint. 118 — 3,0 — OE

| BRAND MARCA | MODEL MODELO | C.C. | YEAR | FRONT | REAR |
|---|---|---|---|---|---|
| **HONDA** | | | | | |
| | XL 125 R | 125 | 98-00 | DF017 | - |

**DF 019 W** — øext. 187 mm / øint. 89 — 4,0 — OE

| BRAND MARCA | MODEL MODELO | C.C. | YEAR | FRONT | REAR |
|---|---|---|---|---|---|
| **HONDA** | | | | | |
| | RS 125 R | 125 | 90-92 | DF012 | DF019 |
| | RS 125 R | 125 | 93- | DF012 | DF019 |

**DF 031 W** — øext. 276 mm / øint. 144 — 4,0 — OE

| BRAND MARCA | MODEL MODELO | C.C. | YEAR | FRONT | REAR |
|---|---|---|---|---|---|
| **DAELIM** | | | | | |
| | DAYSTAR VL 125Z F1 PLUS | 125 | 14- | DF031 | |
| **HONDA** | | | | | |
| | CBR 125 R | 125 | 04-10 | DF031 | DF048 |
| | CBR 125 R | 125 | 11- | DF031 | DF048 |

**DF 037 W** — øext. 190 mm / øint. 58 — 3,6 — SP — OE

**DF 037 RW** — øext. 190 mm / øint. 58 — 3,6 — SP

**DF 037 FLS** — øext. 220 mm / øint. 58 — 4,0 — SP

| BRAND MARCA | MODEL MODELO | C.C. | YEAR | FRONT | REAR |
|---|---|---|---|---|---|
| **APRILIA** | | | | | |
| | AREA 51 | 50 | 98- | | DF037 |
| **CPI** | | | | | |
| | HUSSAR | 50 | 01- | DF037 | - |
| | POPCORN | 50 | 01- | DF037 | - |
| **HONDA** | | | | | |
| | BALI 50 SJ | 50 | 95- | DF037 | - |
| | SGX 50 SKY | 50 | 97- | DF037 | - |
| | NH 90 YUPI | 90 | 91- | DF037 | - |
| | SRX 90 SHADOW | 90 | 97- | DF037 | - |
| | BALI SJ 100 EX | 100 | 95- | DF037 | - |
| | CHA 125 SPACY | 125 | 98- | DF037 | - |
| **KEEWAY** | | | | | |
| | FOCUS 50 | 50 | 05- | DF037 | - |
| **MBK MOTOBEKANE** | | | | | |
| | NITRO | 50 | 97- | DF037 | DF037 |
| | STUNT | 50 | 00- | DF037 | - |
| **P.G.O.** | | | | | |
| | PMS | 50 | 99- | DF037 | - |
| | T-REX 50 | 50 | 99- | DF037 | - |
| | PMS | 110 | 99- | DF037 | - |
| | T-REX 110 | 110 | 99- | DF037 | - |
| | T-REX 125 4-T | 125 | 99- | DF037 | - |
| **SIAMOTO** | | | | | |
| | TOP RACING | 50 | 99- | DF037 | - |
| | MAT | 100 | 99- | DF037 | - |
| | TOP RACING | 100 | 99- | DF037 | - |
| **TOMOS** | | | | | |
| | YOUNGSTR RACING | 50 | 04- | DF037 | - |
| **YAMAHA** | | | | | |
| | AEROX 50 | 50 | 97- | DF037 | DF037 |
| | AEROX 50 NAKED | 50 | 13- | DF037 | DF037 |
| | SLIDER | 50 | 99- | DF037 | - |
| | AEROX 100 | 100 | 00- | DF037 | DF037 |

**DF 048 W** — øext. 220 mm / øint. 105 — 4,2 — OE

| BRAND MARCA | MODEL MODELO | C.C. | YEAR | FRONT | REAR |
|---|---|---|---|---|---|
| **HONDA** | | | | | |
| | CBR 125 R | 125 | 04-10 | DF031 | DF048 |
| | CBR 125 R | 125 | 11- | DF031 | DF048 |
| | XL 125 V VARADERO | 125 | 01- | | DF048 |
| **HONDA INDONESIA** | | | | | |
| | CBR 125 R | 125 | 11- | | DF048 |

**DF 055 W** — øext. 190 mm / øint. 72 — 3,5 — OE

| BRAND MARCA | MODEL MODELO | C.C. | YEAR | FRONT | REAR |
|---|---|---|---|---|---|
| **HONDA** | | | | | |
| | X8R-S | 50 | 98- | | DF055 |

**DF 071 W** — øext. 220 mm / øint. 105 — 4,2 — OE

**DF 071 WS** — øext. 260 mm / øint. 105 — 4,0 — SP025

| BRAND MARCA | MODEL MODELO | C.C. | YEAR | FRONT | REAR |
|---|---|---|---|---|---|
| **HONDA** | | | | | |
| | @ 125 | 125 | 00- | DF071 | - |
| | DYLAN 125 | 125 | 02- | DF071 | - |
| | PS 125i | 125 | 06- | DF071 | - |
| | SH 125 i SCOOPY | 125 | 05-08 | DF071 | - |
| | SH 125 i SCOOPY (TAMBOR TRAS) | 125 | 09-12 | DF071 | - |
| | SH 125 SCOOPY | 125 | 01-04 | DF071 | - |

## DF 078 W

øext. 220 mm øint. 58 | 3,5 | OE

| BRAND MARCA | MODEL MODELO | C.C. | YEAR | FRONT | REAR |
|---|---|---|---|---|---|
| **HONDA** | | | | | |
| NSC 50 AC | | 50 | 13- | DF078 | - |
| NSC 50 C | | 50 | 13- | DF078 | - |
| NSC 50 R | | 50 | 13- | DF078 | - |
| VISION 50 | | 50 | 12- | DF078 | - |
| VISION 110 AC | | 110 | 11- | DF078 | - |
| VISION 110 WHB | | 110 | 11- | DF078 | - |
| MSX 125 | | 125 | 13- | DF078 | DF911 |
| PCX 125 | | 125 | 10- | DF078 | - |
| SH 125 MODE | | 125 | 13- | DF078 | - |
| **HONDA INDONESIA** | | | | | |
| BEAT CW | | 110 | 12- | DF078 | - |
| BEAT FI CW | | 110 | 12- | DF078 | - |
| BEAT FI SW | | 110 | 12- | DF078 | - |
| BEAT SW | | 110 | 12- | DF078 | - |
| SCOOPY 110 | | 110 | 12- | DF078 | - |
| SPACY HELM 110 | | 110 | 12- | DF078 | - |
| VARIO CW 110 | | 110 | 10- | DF078 | - |
| PCX 125 | | 125 | 10- | DF078 | - |
| VARIO TECHNO 125 | | 125 | 12- | DF078 | - |
| VARIO TECHNO 125 CBS | | 125 | 12- | DF078 | - |
| **HONDA MALASIA** | | | | | |
| SPACY 110 | | 110 | 12- | DF078 | - |

## DF 083 W

øext. 256 mm øint. 144 | 4,5 | OE

| BRAND MARCA | MODEL MODELO | C.C. | YEAR | FRONT | REAR |
|---|---|---|---|---|---|
| **HONDA** | | | | | |
| NS1 50 REPLICA | | 50 | 96- | DF083 | |
| NS1, REPLICA | | 75 | 92- | DF083 | |
| FORZA 125 | | 125 | 15- | DF083 | DF007 |

## DF 152 W

øext. 220 mm øint. 100 | 4,0 | OE

| BRAND MARCA | MODEL MODELO | C.C. | YEAR | FRONT | REAR |
|---|---|---|---|---|---|
| **KAWASAKI** | | | | | |
| KDX 125 SR | | 125 | 90- | DF164 | DF152 |

## DF 307 W

øext. 240 mm øint. 89 | 4,0 | OE

| BRAND MARCA | MODEL MODELO | C.C. | YEAR | FRONT | REAR |
|---|---|---|---|---|---|
| **KYMCO** | | | | | |
| DOWNTOWN | | 125 | 15- | | DF307 |

## DF 312 W

øext. 210 mm øint. 81 | 4,0 | OE

| BRAND MARCA | MODEL MODELO | C.C. | YEAR | FRONT | REAR |
|---|---|---|---|---|---|
| **SUZUKI** | | | | | |
| RG 125 F | | 125 | 93-97 | DF321 | DF312 |

## DF 318 W

øext. 220 mm øint. 100 | 4,0 | OE

| BRAND MARCA | MODEL MODELO | C.C. | YEAR | FRONT | REAR |
|---|---|---|---|---|---|
| **SUZUKI** | | | | | |
| UH 125 BURGMAN | | 125 | 02-06 | DF318 | DF319 |

## DF 319 W

øext. 220 mm øint. 64 | 4,0 | OE

| BRAND MARCA | MODEL MODELO | C.C. | YEAR | FRONT | REAR |
|---|---|---|---|---|---|
| **SUZUKI** | | | | | |
| UH 125 BURGMAN | | 125 | 02-06 | DF318 | DF319 |

## DF 321 CW

øext. 300 mm øint. 64 | 5,0 / 19,5 | OE

## DF 321 CRWI-D

øext. 300 mm øint. 64 | 5,0 / 19,5

| BRAND MARCA | MODEL MODELO | C.C. | YEAR | FRONT | REAR |
|---|---|---|---|---|---|
| **SUZUKI** | | | | | |
| RG 125 F | | 125 | 93-97 | DF321 | DF312 |

## DF 364 W

øext. 240 mm øint. 89 | 4,5 | OE

| BRAND MARCA | MODEL MODELO | C.C. | YEAR | FRONT | REAR |
|---|---|---|---|---|---|
| **SUZUKI** | | | | | |
| UH 125 BURGMAN | | 125 | 07-13 | DF364 | DF364 |
| UH 125 BURGMAN | | 125 | 14- | DF364 | DF364 |
| UH 125 BURGMAN ABS | | 125 | 14- | DF364 | DF364 |
| UH 125 BURGMAN R | | 125 | 11- | DF364 | DF364 |

## DF 365 W

øext. 220 mm øint. 89 | 4,5 | OE

| BRAND MARCA | MODEL MODELO | C.C. | YEAR | FRONT | REAR |
|---|---|---|---|---|---|
| **SUZUKI** | | | | | |
| SIXTEEN | | 125 | 08- | DF365 | DF365 |

## DF 451 W

øext. 220 mm øint. 115 | 4,0 | OE

| BRAND MARCA | MODEL MODELO | C.C. | YEAR | FRONT | REAR |
|---|---|---|---|---|---|
| **YAMAHA** | | | | | |
| TDR 125 R | | 125 | 91-92 | DF660 | DF451 |
| TDR 125 R | | 125 | 93- | DF660 | DF451 |

## DF 457 W

øext. 230 mm øint. 86 | 3,0 | OE

| BRAND MARCA | MODEL MODELO | C.C. | YEAR | FRONT | REAR |
|---|---|---|---|---|---|
| **YAMAHA** | | | | | |
| DT 125 R | | 125 | 05- | DF457 | |

## DF 459 W

øext. 282 mm øint. 132 | 5,0 | OE

| BRAND MARCA | MODEL MODELO | C.C. | YEAR | FRONT | REAR |
|---|---|---|---|---|---|
| **YAMAHA** | | | | | |
| SR 125 | | 125 | 98- | DF459 | - |
| XV 125 VIRAGO | | 125 | 97-99 | DF459 | - |
| XVS 125 DRAG STAR | | 125 | 00- | DF459 | - |

## DF 466 W

øext. 155 mm øint. 41 | 3,5 | OE

| BRAND MARCA | MODEL MODELO | C.C. | YEAR | FRONT | REAR |
|---|---|---|---|---|---|
| **APRILIA** | | | | | |
| AMICO 50 GL,GLE,LX,SPORT LIFE,LX | | 50 | 92- | DF466 | - |
| SONIC | | 50 | 98- | DF466 | - |
| SONIC GP | | 50 | 98- | DF466 | - |
| SPICE SONIC GP | | 50 | 98- | DF466 | - |
| **ATALA** | | | | | |
| BYTE | | 50 | 99- | DF466 | - |
| **FANTIC** | | | | | |
| GRINTA | | 50 | 97- | DF466 | |
| **GARELLI** | | | | | |
| 50 BIG WHEELS | | 50 | 94- | DF466 | DF466 |
| 50 PONY, SR | | 50 | 94- | DF466 | |
| **ITALJET** | | | | | |
| 50 CRUISE | | 50 | 94- | DF466 | - |
| 50 PISTA | | 50 | 94- | DF466 | - |
| 50 SCOOP | | 50 | 94- | DF466 | - |
| BAZOOKA | | 50 | 94- | DF466 | - |
| PISTA 2 | | 50 | 92- | DF466 | - |
| YANKEE | | 50 | 94- | DF466 | - |
| **MBK MOTOBEKANE** | | | | | |
| EVOLIS | | 50 | 92- | DF466 | - |
| FIZZ | | 50 | 94- | DF466 | - |
| TARGET | | 50 | 92- | DF466 | - |
| **MONKEY BIKE** | | | | | |
| MB 50 D | | 50 | 06- | DF466 | - |
| MB 50 G | | 50 | 06- | DF466 | - |
| MB 50 R | | 50 | 06- | DF466 | - |
| MB 90 R | | 90 | 06- | DF466 | - |
| MB 110 D | | 110 | 06- | DF466 | - |
| MB 110 G | | 110 | 06- | DF466 | - |
| MB 110 M | | 110 | 06- | DF466 | - |
| **P.G.O.** | | | | | |
| BIG MAX 50 | | 50 | 95- | DF466 | - |
| MEGA FIFTY | | 50 | 99- | DF466 | - |
| PMX | | 50 | 99- | DF466 | - |
| **PIAGGIO** | | | | | |
| ZIP FAST-RIDER | | 50 | 93-95 | DF466 | - |
| **SIAMOTO** | | | | | |
| BIRDIE | | 50 | 99- | DF466 | - |
| MAT | | 50 | 99- | DF466 | - |
| **UVM** | | | | | |
| BINGO 50 | | 50 | 99- | DF466 | - |



**OE:** Original equipment (original replacement disc) - **OE:** Equipo original (disco de remplazo del original) For other models years previous to 1990 visit **www.galferonline.es** - Para otros modelos anteriores al año 1990 visitar **www.galferonline.es**
For consult TÜV (ABE) type approvals visit **www.galfermoto.com --> DOWNALOAD --> TÜV CERTIFICATIONS** - Para consultar las homologaciones TÜV (ABE) visitar **www.galfermoto.com --> DESCARGAS --> CERTIFICACIONES TÜV**

| | | | | |
|---|---|---|---|---|
| BINGO 125 | 125 | 99- | DF466 | - |
| **VILLA** | | | | |
| 50 AX | 50 | 93- | DF466 | - |
| 50 GZ | 50 | 93- | DF466 | - |
| **YAMAHA** | | | | |
| AXIS 50 (I) | 50 | 93- | DF466 | - |
| AXIS COSMO | 50 | 95- | DF466 | - |
| AXIS PLUS | 50 | 95- | DF466 | - |
| BREEZE 50 | 50 | 95- | DF466 | - |
| CR 50 TARGET | 50 | 91- | DF466 | - |
| CR 50 Z | 50 | 92-93 | DF466 | - |
| CR 50 Z | 50 | 94- | DF466 | - |
| JOG | 50 | 92-93 | DF466 | - |
| JOG R | 50 | 94-01 | DF466 | - |
| TARGET | 50 | 94- | DF466 | - |
| ZEST 50 | 50 | 93- | DF466 | - |
| ZEST 80 | 80 | 94- | DF466 | - |
| CR 90 TARGET | 90 | 91- | DF466 | - |
| JOG 90 | 90 | 90- | DF466 | - |

**DF 467 W** — øext. 220 mm, øint. 86 — 4,0 — OE

| BRAND MARCA | MODEL MODELO | C.C. | YEAR | FRONT | REAR |
|---|---|---|---|---|---|
| **YAMAHA** | | | | | |
| TW 125 | | 125 | 98- | DF467 | - |
| **YAMAHA BRASIL** | | | | | |
| XTZ 125 | | 125 | 03- | DF467 | - |
| XTZ 125 X | | 125 | 08- | DF467 | - |

**DF 468 W** — øext. 210 mm, øint. 84 — 4,0 — OE

| BRAND MARCA | MODEL MODELO | C.C. | YEAR | FRONT | REAR |
|---|---|---|---|---|---|
| **YAMAHA** | | | | | |
| TZR 125 | | 125 | 90-91 | DF660 | DF468 |
| TZR 125 | | 125 | 92- | DF660 | DF468 |

**DF 470 W** — øext. 282 mm, øint. 132 — 4,0 — OE

| BRAND MARCA | MODEL MODELO | C.C. | YEAR | FRONT | REAR |
|---|---|---|---|---|---|
| **MBK MOTOBEKANE** | | | | | |
| X-POWER | | 50 | 99-02 | DF470 | |
| **YAMAHA** | | | | | |
| TZR 50 RR | | 50 | 97-02 | DF470 | DF487 |
| TZR 80 RR | | 80 | 92- | DF470 | DF487 |

**DF 473 W** — øext. 180 mm, øint. 48 — 3,5 — OE

**DF 473 RW** — øext. 180 mm, øint. 48 — 3,5

**DF 473 WS** — øext. 210 mm, øint. 48 — 3,5 — SP009

| BRAND MARCA | MODEL MODELO | C.C. | YEAR | FRONT | REAR |
|---|---|---|---|---|---|
| **MBK MOTOBEKANE** | | | | | |
| BOOSTER N.G. | | 50 | 99- | DF473 | - |
| BOOSTER NAKED | | 50 | 06- | DF473 | - |
| BOOSTER SPIRIT | | 50 | 98- | DF473 | - |
| BOOSTER WHEEL 12" | | 50 | 06- | DF473 | - |
| BOOSTER-R | | 50 | 94- | DF473 | - |
| BOOSTER | | 100 | 99-99 | DF473 | - |
| **YAMAHA** | | | | | |
| BW'S 50 R | | 50 | 95-95 | DF473 | - |
| BW'S BUMP | | 50 | 96- | DF473 | - |
| BW'S NAKED | | 50 | 06- | DF473 | - |
| BW'S NEXT GENERATION 50 | | 50 | 96- | DF473 | - |
| BW'S SPY 50 | | 50 | 95-95 | DF473 | - |
| BW'S WHEEL12" | | 50 | 06- | DF473 | - |
| BW'S 65 | | 65 | 95- | DF473 | - |
| BW'S 100 | | 100 | 00- | DF473 | - |

**DF 486 W** — øext. 220 mm, øint. 92 — 3,0 — OE

| BRAND MARCA | MODEL MODELO | C.C. | YEAR | FRONT | REAR |
|---|---|---|---|---|---|
| **YAMAHA** | | | | | |
| DT 50 LCD | | 50 | 96-03 | DF486 | - |
| DT 50 R | | 50 | 94-95 | DF486 | - |

**DF 487 W** — øext. 203 mm, øint. 84 — 4,5 — OE

| BRAND MARCA | MODEL MODELO | C.C. | YEAR | FRONT | REAR |
|---|---|---|---|---|---|
| **YAMAHA** | | | | | |
| TZR 50 RR | | 50 | 97-02 | DF470 | DF487 |
| TZR 80 RR | | 80 | 92- | DF470 | DF487 |

**DF 492 W** — øext. 220 mm, øint. 54 — 4,0 — OE

| BRAND MARCA | MODEL MODELO | C.C. | YEAR | FRONT | REAR |
|---|---|---|---|---|---|
| **MBK MOTOBEKANE** | | | | | |
| DOODO | | 125 | 00- | DF492 | - |
| SKYLINER | | 125 | 99-00 | DF492 | - |
| SKYLINER | | 125 | 01- | DF492 | |
| **YAMAHA** | | | | | |
| SP 125 MAGESTY | | 125 | 98-00 | DF492 | - |
| SP 125 MAGESTY | | 125 | 01- | DF492 | |
| TEO´S 125 | | 125 | 00- | DF492 | - |

**DF 500 W** — øext. 267 mm, øint. 132 — 5,0 — OE

| BRAND MARCA | MODEL MODELO | C.C. | YEAR | FRONT | REAR |
|---|---|---|---|---|---|
| **MBK MOTOBEKANE** | | | | | |
| SKYCRUISER | | 125 | 06-09 | DF500 | DF524 |
| SKYCRUISER | | 125 | 10- | DF500 | DF524 |
| SKYCRUISER ABS | | 125 | 11- | DF500 | DF524 |
| **YAMAHA** | | | | | |
| X - MAX 125 | | 125 | 06-09 | DF500 | DF524 |
| X - MAX 125 | | 125 | 10- | DF500 | DF524 |
| X - MAX 125 ABS | | 125 | 10- | DF500 | DF524 |

**DF 502 W** — øext. 245 mm, øint. 108 — 4,0 — OE

| BRAND MARCA | MODEL MODELO | C.C. | YEAR | FRONT | REAR |
|---|---|---|---|---|---|
| **YAMAHA** | | | | | |
| SP 125 MAGESTY (TAIWAN) | | 125 | 99- | DF502 | - |

**DF 524 W** — øext. 240 mm, øint. 92 — 5,0 — OE

| BRAND MARCA | MODEL MODELO | C.C. | YEAR | FRONT | REAR |
|---|---|---|---|---|---|
| **MBK MOTOBEKANE** | | | | | |
| SKYCRUISER | | 125 | 06-09 | DF500 | DF524 |
| SKYCRUISER | | 125 | 10- | DF500 | DF524 |
| SKYCRUISER ABS | | 125 | 11- | DF500 | DF524 |
| **YAMAHA** | | | | | |
| X - CITY | | 125 | 09- | | DF524 |
| X - MAX 125 | | 125 | 06-09 | DF500 | DF524 |
| X - MAX 125 | | 125 | 10- | DF500 | DF524 |
| X - MAX 125 ABS | | 125 | 10- | DF500 | DF524 |

**DF 526 W** — øext. 292 mm, øint. 155 — 4,0 — OE

| BRAND MARCA | MODEL MODELO | C.C. | YEAR | FRONT | REAR |
|---|---|---|---|---|---|
| **YAMAHA** | | | | | |
| MT 125 | | 125 | 14- | DF526 | DF527 |
| YZF 125 R | | 125 | 08- | DF526 | DF527 |

**DF 527 W** — øext. 230 mm, øint. 102 — 4,0 — OE

| BRAND MARCA | MODEL MODELO | C.C. | YEAR | FRONT | REAR |
|---|---|---|---|---|---|
| **YAMAHA** | | | | | |
| MT 125 | | 125 | 14- | DF526 | DF527 |
| YZF 125 R | | 125 | 08- | DF526 | DF527 |

## DF 609 W

øext. 220 mm / øint. 96 — 3,5 — OE

| BRAND MARCA | MODEL MODELO | C.C. | YEAR | FRONT | REAR |
|---|---|---|---|---|---|
| **APRILIA** | | | | | |
| SCARABEO 50 | | 50 | 96-97 | DF609 | - |
| SCARABEO 70 | | 70 | 94- | DF609 | - |
| SCARABEO 125 4T | | 125 | 98-04 | DF671 | DF609 |
| **ATALA** | | | | | |
| CAROSELLO | | 50 | 99- | DF609 | - |

## DF 612 W

øext. 220 mm / øint. 60 — 4,0 — OE

| BRAND MARCA | MODEL MODELO | C.C. | YEAR | FRONT | REAR |
|---|---|---|---|---|---|
| **APRILIA** | | | | | |
| SCARABEO 4 T | | 50 | 04- | DF612 | - |
| SCARABEO de LUXE 50 | | 50 | 98-01 | DF612 | DF629 |
| SCARABEO DITECH 50 | | 50 | 02- | DF612 | |
| SPORT CITY ONE 50 | | 50 | 08- | DF612 | - |
| SCARABEO 100 | | 100 | 00-03 | DF612 | - |
| SCARABEO 100 4T | | 100 | 04- | DF612 | - |
| LEONARDO 125 4T | | 125 | 96-98 | DF612 | DF629 |
| LEONARDO 125 4T | | 125 | 99- | DF612 | DF629 |
| SPORT CITY 125 | | 125 | 04- | DF671 | DF612 |
| SPORT CITY ONE 125 | | 125 | 08- | DF612 | - |
| **BETA** | | | | | |
| EIKON 125 4T | | 125 | 99- | DF612 | |
| **DERBI** | | | | | |
| BOULERVARD S | | 125 | 07- | DF671 | DF612 |
| RAMBLA 125 | | 125 | 07- | DF671 | DF612 |
| **SCARABEO** | | | | | |
| 50 2T | | 50 | 14- | DF612 | - |
| 50 4T | | 50 | 14- | DF612 | - |
| 100 4T | | 100 | 14- | DF612 | - |
| 125 ie | | 125 | 15- | DF671 | DF612 |

## DF 622 W

øext. 220 mm / øint. 90 — 4,0 — OE

| BRAND MARCA | MODEL MODELO | C.C. | YEAR | FRONT | REAR |
|---|---|---|---|---|---|
| **MALAGUTI** | | | | | |
| MADISON 125 | | 125 | 99-05 | DF622 | |
| PHANTOM MAX 125 | | 125 | 04- | DF622 | DF622 |

## DF 624 W

øext. 174 mm / øint. 38 — 3,0 — OE

| BRAND MARCA | MODEL MODELO | C.C. | YEAR | FRONT | REAR |
|---|---|---|---|---|---|
| **ITALJET** | | | | | |
| DRAGSTER | | 50 | 98- | DF624 | DF625 |
| FORMULA | | 50 | 94-99 | DF624 | DF625 |
| FORMULA, LC | | 50 | 00- | DF624 | DF625 |
| DRAGSTER | | 125 | 00- | DF624 | DF625 |
| FORMULA 125 | | 125 | 97- | DF624 | DF625 |

## DF 625 W

øext. 174 mm / øint. 66 — 3,5 — OE

| BRAND MARCA | MODEL MODELO | C.C. | YEAR | FRONT | REAR |
|---|---|---|---|---|---|
| **ITALJET** | | | | | |
| DRAGSTER | | 50 | 98- | DF624 | DF625 |
| FORMULA | | 50 | 94-99 | DF624 | DF625 |
| FORMULA, LC | | 50 | 00- | DF624 | DF625 |
| DRAGSTER | | 125 | 00- | DF624 | DF625 |
| FORMULA 125 | | 125 | 97- | DF624 | DF625 |

## DF 629 W / DF 629 RW / DF 629 FLS

DF 629 W: øext. 190 mm / øint. 58 — 3,6 — OE
DF 629 RW: øext. 190 mm / øint. 58 — 3,6
DF 629 FLS: øext. 220 mm / øint. 58 — 3,0 — SP009

| BRAND MARCA | MODEL MODELO | C.C. | YEAR | FRONT | REAR |
|---|---|---|---|---|---|
| **APRILIA** | | | | | |
| COMPAY | | 50 | 02- | DF629 | - |
| GULLIVER 50 | | 50 | 95-95 | DF629 | - |
| GULLIVER 50 LC | | 50 | 96-97 | DF629 | - |
| HABANA | | 50 | 98-01 | DF629 | - |
| HABANA CUSTOM | | 50 | 98-01 | DF629 | - |
| Mc GULLIVER 50 | | 50 | 98- | DF629 | - |
| MOJITO 50 | | 50 | 02- | DF629 | - |
| RALLY 50 | | 50 | 94-95 | DF629 | - |
| RALLY 50 LC | | 50 | 96- | DF629 | DF629 |
| SCARABEO de LUXE 50 | | 50 | 98-01 | DF612 | DF629 |
| SR 50 | | 50 | 93-93 | DF629 | - |
| SR 50 ACQUA | | 50 | 95-96 | DF629 | - |
| SR 50 EUROPA, URBAND KID, VIPER | | 50 | 94-94 | DF629 | - |
| SR 50 FACTORY | | 50 | 05- | DF629 | DF648 |
| SR 50 R | | 50 | 05- | DF629 | DF629 |
| SR 50 RACING CATALIZADA | | 50 | 00- | DF629 | DF629 |
| SR 50 REPLICA | | 50 | 92-92 | DF629 | - |
| SR 50 REPLICA | | 50 | 93-93 | DF629 | - |
| SR 50 STEALTH | | 50 | 97-99 | DF629 | DF629 |
| SR 50 URBAN | | 50 | 92-92 | DF629 | - |
| SR 50 VIPER | | 50 | 92-92 | DF629 | - |
| SR 50 VIPER | | 50 | 94-94 | DF629 | - |
| SR 50 WWW | | 50 | 97-99 | DF629 | DF629 |
| COMPAY | | 125 | 03- | DF629 | - |
| HABANA | | 125 | 00-02 | DF629 | - |
| HABANA CUSTOM | | 125 | 00-02 | DF629 | - |
| LEONARDO 125 4T | | 125 | 96-98 | DF612 | DF629 |
| LEONARDO 125 4T | | 125 | 99- | DF612 | DF629 |
| MOJITO 125 | | 125 | 05- | DF629 | - |
| SR 125 | | 125 | 98- | DF629 | - |
| **BETA** | | | | | |
| CHRONO 50 | | 50 | 94- | DF629 | - |
| TEMPO 50 | | 50 | 94- | DF629 | - |
| **GILERA-PIAGGIO** | | | | | |
| 50 R | | 50 | 93- | DF629 | - |
| 50 RT FUN | | 50 | 93- | DF629 | - |
| 50 TYPHOON | | 50 | 93- | DF629 | - |
| NRG MC2 | | 50 | 98-00 | DF629 | DF705 |
| NRG MC3 | | 50 | 01- | DF629 | DF705 |
| STALKER 50 | | 50 | 97- | DF629 | DF705 |
| 125 TYPHOON | | 125 | 95- | DF629 | - |
| **KTM** | | | | | |
| 50 SCOOTER | | 50 | 94- | DF629 | - |
| **MBK MOTOBEKANE** | | | | | |
| MACH G/R | | 50 | 02- | DF629 | - |
| OVETTO | | 50 | 98- | DF629 | - |
| **PEUGEOT** | | | | | |
| SQUAB | | 50 | 95- | DF629 | - |
| **PIAGGIO** | | | | | |
| NRG | | 50 | 94-98 | DF629 | - |
| NRG=MC2 | | 50 | 98-03 | DF629 | DF705 |
| NTT | | 50 | 95- | DF629 | - |
| STORM | | 50 | 94- | DF629 | - |
| TYPHOON | | 50 | 94-95 | DF629 | - |
| TYPHOON | | 50 | 96-98 | DF629 | - |
| TYPHOON-X | | 50 | 99-10 | DF629 | - |
| TYPHOON | | 80 | 95-95 | DF629 | - |
| TYPHOON | | 80 | 96- | DF629 | - |
| TYPHOON | | 125 | 95-95 | DF629 | - |
| TYPHOON | | 125 | 96-10 | DF629 | - |
| **YAMAHA** | | | | | |
| JOG R | | 50 | 02- | DF629 | - |
| JOG RR LC | | 50 | 02- | DF629 | - |
| NEO´S | | 50 | 97- | DF629 | - |
| NEO´S 50 4T | | 50 | 09- | DF629 | - |
| NEO´S 100 | | 100 | 00- | DF629 | - |

## DF 632 W

øext. 220 mm / øint. 110 — 4,0 — OE

| BRAND MARCA | MODEL MODELO | C.C. | YEAR | FRONT | REAR |
|---|---|---|---|---|---|
| **APRILIA** | | | | | |
| PEGASO 125 | | 125 | 91-92 | DF663 | DF632 |
| PEGASO 125 KAT | | 125 | 93- | DF663 | DF632 |

## DF 642 W

øext. 155 mm / øint. 39 — 3,0 — OE

| BRAND MARCA | MODEL MODELO | C.C. | YEAR | FRONT | REAR |
|---|---|---|---|---|---|
| **MALAGUTI** | | | | | |
| 50 F10 | | 50 | 96- | DF642 | - |
| F10 | | 50 | 91- | DF642 | - |
| YESTERDAY 50 | | 50 | 98- | DF642 | - |
| **PEUGEOT** | | | | | |
| ZENITH | | 50 | 94-94 | DF642 | - |
| ZENITH 50 | | 50 | 93-93 | DF642 | - |
| ZENITH LM | | 50 | 95- | DF642 | - |

## DF 648 W / DF 648 RW

DF 648 W: øext. 190 mm / øint. 68 — 4,0 — OE
DF 648 RW: øext. 190 mm / øint. 68 — 4,0

| BRAND MARCA | MODEL MODELO | C.C. | YEAR | FRONT | REAR |
|---|---|---|---|---|---|
| **APRILIA** | | | | | |
| SR 50 FACTORY | | 50 | 05- | DF629 | DF648 |
| ARRECIFE 125 | | 125 | 03-05 | | DF648 |
| ARRECIFE 125 SPRINT | | 125 | 06- | | DF648 |
| ATLANTIC 125 | | 125 | 03-05 | | DF648 |
| ATLANTIC 125 SPRINT | | 125 | 06- | | DF648 |



**OE:** Original equipment (original replacement disc) - **OE:** Equipo original (disco de remplazo del original) For other models years previous to 1990 visit **www.galferonline.es** - Para otros modelos anteriores al año 1990 visitar **www.galferonline.es**
For consult TÜV (ABE) type approvals visit **www.galfermoto.com --> DOWNALOAD --> TÜV CERTIFICATIONS** - Para consultar las homologaciones TÜV (ABE) visitar **www.galfermoto.com --> DESCARGAS --> CERTIFICACIONES TÜV**

**DF 649 W** — øext. 190 mm / øint. 58 — 3,7 — OE

| BRAND MARCA | MODEL MODELO | C.C. | YEAR | FRONT | REAR |
|---|---|---|---|---|---|
| **ATALA** | | | | | |
| | HACKER AT 12 | 50 | 99- | DF649 | - |
| | HACKER LC | 50 | 99- | DF649 | - |
| | SKEGGIA | 50 | 99- | DF649 | - |
| **BENELLI** | | | | | |
| | GT 491 | 50 | 98- | DF649 | - |
| | K 2 | 50 | 98- | DF649 | - |
| | K 2 LIQUID | 50 | 98- | DF649 | - |
| | K 2 NAMUR | 50 | 98- | DF649 | - |
| | NAKED 50 | 50 | 98- | DF649 | - |
| | RACING 491 | 50 | 98- | DF649 | DF649 |
| | SPORT 491 | 50 | 98- | DF649 | - |
| | SUPERBIKE 491 | 50 | 98- | DF649 | DF649 |
| | K 2 BIPOSTO | 100 | 98- | DF649 | - |
| | VELVET 125 | 125 | 98-10 | DF669 | DF649 |
| **BETA** | | | | | |
| | ARK 50 LC - R | 50 | 97- | DF649 | DF649 |
| | EIKON | 50 | 99- | DF649 | DF649 |
| | QUADRA | 50 | 94- | DF649 | - |
| **GENERIC** | | | | | |
| | IDEO | 50 | 05- | DF649 | - |
| | ROC | 50 | 08- | DF649 | - |
| | XOR | 50 | 05- | DF649 | - |
| | XOR 2 | 50 | 10- | DF649 | - |
| | IDEO 125 | 125 | 05- | DF649 | - |
| | XOR 125 | 125 | 05- | DF649 | - |
| **GOVECS** | | | | | |
| | GO ! S1.2 | EL | 10- | DF649 | - |
| **MALAGUTI** | | | | | |
| | CROSSER 50 | 50 | 99- | DF649 | - |
| | F 15 FIRE FOX | 50 | 96-97 | DF649 | - |
| | F 15 FIRE FOX LC | 50 | 98- | | DF649 |
| | F12 PHANTOM | 50 | 98- | DF649 | - |
| | F12 PHANTOM AIRE/AGUA 50 | 50 | 94-97 | DF649 | - |
| | F12 PHANTOM | 100 | 00- | | DF649 |
| | F 18 WARRIOR | 125 | 00-03 | | DF649 |
| **PEUGEOT** | | | | | |
| | BUXY 50 | 50 | 94- | DF649 | - |
| | ELYSEO | 50 | 98- | DF649 | - |
| | SPEEDDAKE | 50 | 95- | DF649 | - |
| | SV 50 D, SPORT, T | 50 | 94- | DF649 | - |
| | SV 50 GEO | 50 | 92-92 | DF649 | - |
| | SV 50 GEO | 50 | 93- | DF649 | - |
| | TREKKER OFF ROAD | 50 | 97- | DF649 | - |
| | TREKKER ROAD | 50 | 97- | DF649 | - |
| | VIVACITY | 50 | 99- | DF649 | - |
| | LOOXOR | 100 | 01- | | DF649 |
| | TREKKER ROAD | 100 | 98- | DF649 | - |
| | VIVACITY | 100 | 99- | DF649 | - |
| | GEO SV | 125 | 92- | DF649 | - |
| | LOOXOR | 125 | 01-04 | | DF649 |
| | SV EXECUTIVE/GEO | 125 | 91-94 | DF649 | - |
| | SV EXECUTIVE/GEO | 125 | 95- | DF649 | - |
| **RENAULT** | | | | | |
| | CAMPUS | 50 | 02- | DF649 | - |
| **RIEJU** | | | | | |
| | CROSSER CR1 | 50 | 96- | DF649 | - |
| | F 10 JET LINE | 50 | 95- | DF649 | - |
| | FIRST | 50 | 95- | DF649 | - |

**DF 650 W** — øext. 200 mm / øint. 97 — 4,0 — OE

**DF 650 RW** — øext. 200 mm / øint. 97 — 4,0

| BRAND MARCA | MODEL MODELO | C.C. | YEAR | FRONT | REAR |
|---|---|---|---|---|---|
| **LML** | | | | | |
| | STAR 2T (TODAS) | 125 | 10- | DF650 | - |
| | STAR 4T (TODAS) | 125 | 10- | DF650 | - |
| | STAR BICOLOR VINTAGE 4T | 125 | 10- | DF650 | - |
| | STAR GT 2T | 125 | 10- | DF650 | - |
| | STAR GT 4T | 125 | 10- | DF650 | - |
| | STAR MAT SERIES 4T | 125 | 10- | DF650 | - |
| | STAR RS 4T | 125 | 10- | DF650 | - |
| **MALAGUTI** | | | | | |
| | 50 CENTRO SL | 50 | 94- | DF650 | - |
| **PIAGGIO** | | | | | |
| | FLY 50 2T | 50 | 05- | DF650 | - |
| | FLY 50 4T | 50 | 05- | DF650 | - |
| | QUARTZ | 50 | 92- | DF650 | - |
| | SFERA | 50 | 96- | DF650 | - |
| | VESPA 50 ET2 | 50 | 00- | DF650 | - |
| | VESPA 50 ET4 | 50 | 01- | DF650 | - |
| | VESPA 50 S 4V | 50 | 09- | DF650 | - |
| | ZIP SP LC | 50 | 96-99 | DF650 | - |
| | FLY 100 | 100 | 07- | DF650 | - |
| | FLY 125 4T | 125 | 05- | DF650 | - |
| | HEXAGON GTX 125 (G) | 125 | 00-00 | DF650 | DF650 |
| | HEXAGON GTX 125 (H) | 125 | 00-00 | DF650 | DF650 |
| | HEXAGON LX 125 (G) | 125 | 98-99 | DF650 | - |
| | HEXAGON LX 125 (H) | 125 | 98-99 | DF650 | - |
| | SFERA 4T | 125 | 96- | DF650 | - |
| | SKIPPER | 125 | 93-97 | DF650 | - |
| | VESPA ET4 | 125 | 96- | DF650 | - |

**DF 658 W** — øext. 240 mm / øint. 108 — 3,5 — OE

| BRAND MARCA | MODEL MODELO | C.C. | YEAR | FRONT | REAR |
|---|---|---|---|---|---|
| **BETA** | | | | | |
| | RK6T 50 | 50 | 99-01 | DF658 | |
| | RK6T 50 SUPERMOTARD | 50 | 99-01 | DF658 | |
| | RR-T | 50 | 99-01 | DF658 | DF646 |
| **YAMAHA** | | | | | |
| | DT 50 R | 50 | 05- | DF658 | DF698 |

**DF 660 CW** — øext. 320 mm / øint. 64 — 5,0 / 10,5 — OE

**DF 660 CRWI-D** — øext. 320 mm / øint. 64 — 5,0 / 10,5

| BRAND MARCA | MODEL MODELO | C.C. | YEAR | FRONT | REAR |
|---|---|---|---|---|---|
| **APRILIA** | | | | | |
| | RS 125 | 125 | 06- | DF660 | DF669 |
| | RS 125 EXTREMA, REPLICA | 125 | 92-05 | DF660 | DF669 |
| | SPORT PROT 125 | 125 | 92-94 | DF660 | |
| | TUONO 125 | 125 | 03- | DF660 | DF669 |
| **CAGIVA** | | | | | |
| | MITO 125 EDDY | 125 | 93- | DF660 | |
| | MITO 125 SP 525 | 125 | 08- | DF660 | |
| | PLANET 125 | 125 | 98- | DF660 | |
| | RAPTOR 125 | 125 | 03- | DF660 | |
| | SUPER CITY 125 | 125 | 91- | DF660 | |
| **GILERA-PIAGGIO** | | | | | |
| | 125 GFR | 125 | 93-94 | DF660 | |
| **YAMAHA** | | | | | |
| | TDR 125 R | 125 | 91-92 | DF660 | DF451 |
| | TDR 125 R | 125 | 93- | DF660 | DF451 |
| | TZR 125 | 125 | 90-91 | DF660 | DF468 |
| | TZR 125 | 125 | 92- | DF660 | DF468 |

**DF 663 FLW** — øext. 298 mm / øint. 105 — 4,0 — OE

| BRAND MARCA | MODEL MODELO | C.C. | YEAR | FRONT | REAR |
|---|---|---|---|---|---|
| **APRILIA** | | | | | |
| | PEGASO 125 | 125 | 91-92 | DF663 | DF632 |
| | PEGASO 125 KAT | 125 | 93- | DF663 | DF632 |

**DF 666 W** — øext. 240 mm / øint. 125,5 — 4,0 — OE

| BRAND MARCA | MODEL MODELO | C.C. | YEAR | FRONT | REAR |
|---|---|---|---|---|---|
| **GILERA-PIAGGIO** | | | | | |
| | DNA 50 (G) | 50 | 00- | DF666 | |
| | DNA 50 (H) | 50 | 00- | DF666 | |
| | DNA 125 (G) | 125 | 01- | DF666 | DF666 |
| | DNA 125 (H) | 125 | 01- | DF666 | DF666 |
| | NEXUS | 125 | 07- | DF667 | DF666 |
| | NEXUS i.e. | 125 | 09- | DF667 | DF666 |
| | RUNNER 125 SP | 125 | 99-00 | DF737 | DF666 |
| | RUNNER 125 VX (G) | 125 | 01- | DF737 | DF666 |
| | RUNNER 125 VX (H) | 125 | 01- | DF737 | DF666 |
| **PIAGGIO** | | | | | |
| | BEVERLY 125 | 125 | 10- | | DF666 |
| | MP 3 125 | 125 | 06-08 | DF714 | DF666 |
| | MP 3 125 LT | 125 | 09- | DF714 | DF666 |
| | MP 3 125 YOURBAN | 125 | 11- | DF714 | DF666 |
| | MP 3 HYBRID | 125 | 09- | DF714 | DF666 |
| | X 8 | 125 | 04-05 | DF667 | DF666 |
| | X 8 | 125 | 06- | DF667 | DF666 |
| | X 9 | 125 | 01- | DF666 | DF666 |
| | X 9 EVOLUTION RIGHT/DER. | 125 | 04-05 | DF667 | DF666 |
| | X 9 EVOLUTION RIGHT/DER. | 125 | 06- | DF667 | DF666 |
| | X EVO 125 | 125 | 08- | DF667 | DF666 |

**DF 667 W** — øext. 260 mm / øint. 125,5 — 4,0 — OE

| BRAND MARCA | MODEL MODELO | C.C. | YEAR | FRONT | REAR |
|---|---|---|---|---|---|
| **GILERA-PIAGGIO** | | | | | |
| | NEXUS | 125 | 07- | DF667 | DF666 |
| | NEXUS i.e. | 125 | 09- | DF667 | DF666 |
| **PIAGGIO** | | | | | |
| | BEVERLY 125 4T (G) | 125 | 02- | DF667 | DF667 |
| | BEVERLY 125 4T (H) | 125 | 02- | DF667 | DF667 |
| | CARNABY 125 | 125 | 07- | DF667 | DF667 |
| | X 8 | 125 | 04-05 | DF667 | DF666 |
| | X 8 | 125 | 06- | DF667 | DF666 |
| | X 9 EVOLUTION LEFT/IZQ. | 125 | 04-05 | DF667 | |
| | X 9 EVOLUTION LEFT/IZQ. | 125 | 06- | DF667 | |
| | X 9 EVOLUTION RIGHT/DER. | 125 | 04-05 | DF667 | DF666 |
| | X 9 EVOLUTION RIGHT/DER. | 125 | 06- | DF667 | DF666 |
| | X EVO 125 | 125 | 08- | DF667 | DF666 |

## DF 669 W

øext. 220 mm øint. 102 — 4,0 — OE

| BRAND MARCA | MODEL MODELO | C.C. | YEAR | FRONT | REAR |
|---|---|---|---|---|---|
| **APRILIA** | | | | | |
| | RS 125 | 125 | 06- | DF660 | DF669 |
| | RS 125 EXTREMA, REPLICA | 125 | 92-05 | DF660 | DF669 |
| | TUONO 125 | 125 | 03- | DF660 | DF669 |
| | BENELLI | | | | |
| | VELVET 125 | 125 | 98-10 | DF669 | DF649 |

## DF 671 W / DF 671 FLW

DF 671 W: øext. 260 mm øint. 60 — 4,0 — OE
DF 671 FLW: øext. 260 mm øint. 60 — 4,0 — OE

| BRAND MARCA | MODEL MODELO | C.C. | YEAR | FRONT | REAR |
|---|---|---|---|---|---|
| **APRILIA** | | | | | |
| | SCARABEO 125 4T | 125 | 98-04 | DF671 | DF609 |
| | SCARABEO 125 4T | 125 | 05- | DF671 | |
| | SPORT CITY 125 | 125 | 04- | DF671 | DF612 |
| **DERBI** | | | | | |
| | BOULERVARD S | 125 | 07- | DF671 | DF612 |
| | RAMBLA 125 | 125 | 07- | DF671 | DF612 |
| **SCARABEO** | | | | | |
| | 125 ie | 125 | 15- | DF671 | DF612 |

## DF 674 W / DF 674 FLW

DF 674 W: øext. 260 mm øint. 108 — 4,0 — OE
DF 674 FLW: øext. 260 mm øint. 108 — 3,0 — OE

| BRAND MARCA | MODEL MODELO | C.C. | YEAR | FRONT | REAR |
|---|---|---|---|---|---|
| **BETA** | | | | | |
| | AR-T | 50 | 03-04 | DF674 | DF675 |
| **BULTACO** | | | | | |
| | ASTRO | 50 | 00- | DF674 | DF698 |
| | LOBITO | 50 | 99- | DF674 | DF698 |
| **CONTI** | | | | | |
| | PROMO CUP | 50 | 00-03 | DF674 | DF646 |
| **DERBI** | | | | | |
| | BLACK DEVIL | 50 | 04- | DF674 | DF698 |
| | SENDA R DRD | 50 | 02-04 | DF674 | DF700 |
| | SENDA DRD 125 R 4T 4V | 125 | 09- | DF674 | DF675 |
| | SENDA R 4T | 125 | 04- | DF674 | DF675 |
| **GAS GAS** | | | | | |
| | 125 PAMPERA | 125 | 03- | DF674 | |
| **HM** | | | | | |
| | CRE BAJA | 50 | 99-02 | DF674 | DF889 |
| | CRE BAJA | 50 | 03-08 | DF674 | DF889 |
| | CRE BAJA RR | 50 | 09- | DF674 | DF889 |
| | CRE SIX | 50 | 99-02 | DF674 | DF889 |
| | CRE SIX | 50 | 03- | DF674 | DF889 |
| | CRE SIX COMPETICION | 50 | 09- | DF674 | DF889 |
| **MOTORHISPANIA** | | | | | |
| | RYZ PRO ENDURO | 50 | 09- | DF674 | |
| | RYZ SM | 50 | 99-04 | DF674 | DF675 |
| **RIEJU** | | | | | |
| | MRX 50 | 50 | 03-07 | DF674 | DF675 |
| | RR 50 CASTROL | 50 | 99- | DF674 | DF675 |
| | SMX | 50 | 02- | DF674 | DF675 |
| | TANGO 50 | 50 | 07-08 | DF674 | DF675 |
| | TANGO 50 | 50 | 09- | DF674 | DF675 |
| | TANGOO 50 | 50 | 08- | DF674 | DF675 |
| | MXR 125 4T | 125 | 03- | DF674 | DF675 |
| | SMX 125 4T | 125 | 03-07 | DF674 | DF675 |
| | TANGO 125 | 125 | 06-10 | DF674 | DF675 |
| **YAMAHA** | | | | | |
| | DT 50 SUPERMOTARD | 50 | 05- | DF674 | DF698 |
| | XT 125 X | 125 | 05- | DF674 | |

## DF 675 W

øext. 200 mm øint. 63 — 4,0 — OE

| BRAND MARCA | MODEL MODELO | C.C. | YEAR | FRONT | REAR |
|---|---|---|---|---|---|
| **BETA** | | | | | |
| | AR-T | 50 | 03-04 | DF674 | DF675 |
| **DERBI** | | | | | |
| | SENDA DRD 125 R 4T 4V | 125 | 09- | DF674 | DF675 |
| | SENDA R 4T | 125 | 04- | DF674 | DF675 |
| | SENDA SM 4T | 125 | 04- | | DF675 |
| **MOTORHISPANIA** | | | | | |
| | RYZ ENDURO | 50 | 99- | | DF675 |
| | RYZ SM | 50 | 99-04 | DF674 | DF675 |
| **RIEJU** | | | | | |
| | MRX 50 | 50 | 03-07 | DF674 | DF675 |
| | RR 50 CASTROL | 50 | 99- | DF674 | DF675 |
| | SMX | 50 | 02- | DF674 | DF675 |
| | TANGO 50 | 50 | 07-08 | DF674 | DF675 |
| | TANGO 50 | 50 | 09- | DF674 | DF675 |
| | TANGOO 50 | 50 | 08- | DF674 | DF675 |
| | MXR 125 4T | 125 | 03- | DF674 | DF675 |
| | SMX 125 4T | 125 | 03-07 | DF674 | DF675 |
| | TANGO 125 | 125 | 06-10 | DF674 | DF675 |
| | TANGO 125 PRO | 125 | 07- | DF677 | DF675 |

## DF 683 W

øext. 280 mm øint. 108 — 4,0 — OE

| BRAND MARCA | MODEL MODELO | C.C. | YEAR | FRONT | REAR |
|---|---|---|---|---|---|
| **RIEJU** | | | | | |
| | RS-2 MATRIX | 50 | 03-05 | DF683 | DF684 |
| | RS-2 NKD | 50 | 04-05 | DF683 | DF684 |

## DF 684 W

øext. 220 mm øint. 57 — 4,0 — OE

| BRAND MARCA | MODEL MODELO | C.C. | YEAR | FRONT | REAR |
|---|---|---|---|---|---|
| **RIEJU** | | | | | |
| | RS-2 MATRIX | 50 | 03-05 | DF683 | DF684 |
| | RS-2 NKD | 50 | 04-05 | DF683 | DF684 |

## DF 698 W

øext. 218 mm øint. 62 — 3,5 — OE

| BRAND MARCA | MODEL MODELO | C.C. | YEAR | FRONT | REAR |
|---|---|---|---|---|---|
| **BULTACO** | | | | | |
| | ASTRO | 50 | 00- | DF674 | DF698 |
| | LOBITO | 50 | 99- | DF674 | DF698 |
| **DERBI** | | | | | |
| | BLACK DEVIL | 50 | 04- | DF674 | DF698 |
| | SENDA SM DRD | 50 | 02-04 | DF708 | DF698 |
| | SENDA SM DRD 50 EVO | 50 | 09- | DF759 | DF698 |
| | CROSS CITY | 125 | 09- | DF888 | DF698 |
| | MULHACEN 125 | 125 | 06- | DF888 | DF698 |
| | TERRA 4T 125 | 125 | 06- | DF888 | DF698 |
| | TERRA 4T 125 ADVENTURE | 125 | 08- | | DF698 |
| **YAMAHA** | | | | | |
| | DT 50 R | 50 | 05- | DF658 | DF698 |
| | DT 50 SUPERMOTARD | 50 | 05- | DF674 | DF698 |

## DF 699 W / DF 699 FLW

DF 699 W: øext. 290 mm øint. 108 — 3,5 — OE
DF 699 FLW: øext. 290 mm øint. 108 — 4,0 — OE

| BRAND MARCA | MODEL MODELO | C.C. | YEAR | FRONT | REAR |
|---|---|---|---|---|---|
| **HM** | | | | | |
| | DERAPAGE | 50 | 99-02 | DF699 | DF889 |
| | DERAPAGE | 50 | 03-08 | DF699 | DF889 |
| | DERAPAGE | 50 | 09- | DF699 | DF889 |
| | DERAPAGE COMPETICION | 50 | 09-10 | DF699 | DF889 |
| | DERAPAGE COMPETICION | 50 | 11- | DF699 | DF889 |

## DF 700 W

øext. 180 mm øint. 62 — 3,5 — OE

| BRAND MARCA | MODEL MODELO | C.C. | YEAR | FRONT | REAR |
|---|---|---|---|---|---|
| **DERBI** | | | | | |
| | SENDA | 50 | 97- | | DF700 |
| | SENDA R DRD | 50 | 02-04 | DF674 | DF700 |
| | SENDA X-TREM R | 50 | 03- | | DF700 |
| | X RACE 50 | 50 | 06- | | DF700 |

## DF 704 W / DF 704 FLW

DF 704 W: øext. 220 mm øint. 105 — 4,0 — OE
DF 704 FLW: øext. 220 mm øint. 105 — 4,0 — OE

| BRAND MARCA | MODEL MODELO | C.C. | YEAR | FRONT | REAR |
|---|---|---|---|---|---|
| **PIAGGIO** | | | | | |
| | LIBERTY 50 | 50 | 97-99 | DF704 | - |
| | LIBERTY 50 4T | 50 | 00-08 | DF704 | - |
| | NRG POWER DD | 50 | 05- | DF704 | DF705 |
| | NRG POWER PURE JET | 50 | 05- | DF704 | DF705 |
| | NRG=MC3 PURE JET | 50 | 04- | DF704 | DF705 |
| | ZIP CATALIZADA | 50 | 00- | DF704 | - |
| | FREE 100 | 100 | 02- | DF704 | - |
| | ZIP 100 | 100 | 07- | DF704 | - |
| | LIBERTY 4-T | 125 | 98-08 | DF704 | - |
| | SUPER HEXAGON GTX 125 (G) | 125 | 01- | | DF704 |
| | SUPER HEXAGON GTX 125 (H) | 125 | 01- | | DF704 |
| | VESPA GRAN TURISMO (G) | 125 | 03- | DF704 | DF704 |
| | VESPA GRAN TURISMO (H) | 125 | 03- | DF704 | DF704 |
| | VESPA GTS 125 SUPER | 125 | 09- | DF704 | |
| | VESPA GTV 125 | 125 | 06- | DF704 | DF704 |
| | VESPA LX 125 | 125 | 09- | DF704 | |
| | VESPA LXV 125ie | 125 | 10- | DF704 | - |
| | VESPA PRIMAVERA | 125 | 15- | DF704 | - |



**OE:** Original equipment (original replacement disc) - **OE:** Equipo original (disco de remplazo del original) For other models years previous to 1990 visit **www.galferonline.es** - Para otros modelos anteriores al año 1990 visitar **www.galferonline.es**
For consult TÜV (ABE) type approvals visit **www.galfermoto.com --> DOWNLOAD --> TÜV CERTIFICATIONS** - Para consultar las homologaciones TÜV (ABE) visitar **www.galfermoto.com --> DESCARGAS --> CERTIFICACIONES TÜV**

| | | | | |
|---|---|---|---|---|
| VESPA SPRINT | 125 | 15- | DF704 | - |

## DF 705 W

øext. 175 mm øint. 73 — 4,0 — OE

| BRAND MARCA | MODEL MODELO | C.C. | YEAR | FRONT | REAR |
|---|---|---|---|---|---|
| **DERBI** | | | | | |
| GP 1 | | 50 | 01-04 | | DF705 |
| GP 1 | | 50 | 05- | | DF705 |
| **GILERA-PIAGGIO** | | | | | |
| NRG MC2 | | 50 | 98-00 | DF629 | DF705 |
| NRG MC3 | | 50 | 01- | DF629 | DF705 |
| RUNNER 50 DD | | 50 | 98- | DF737 | DF705 |
| RUNNER 50 SP | | 50 | 98-04 | DF737 | DF705 |
| RUNNER 50 SP | | 50 | 05-05 | DF737 | DF705 |
| RUNNER 50 SP / PJ | | 50 | 06- | DF737 | DF705 |
| STALKER 50 | | 50 | 97- | DF629 | DF705 |
| **PIAGGIO** | | | | | |
| NRG EXTREME AGUA | | 50 | 99- | DF737 | DF705 |
| NRG POWER DD | | 50 | 05- | DF704 | DF705 |
| NRG POWER PURE JET | | 50 | 05- | DF704 | DF705 |
| NRG=MC2 | | 50 | 98-03 | DF629 | DF705 |
| NRG=MC3 PURE JET | | 50 | 04- | DF704 | DF705 |
| ZIP 4T | | 50 | 00- | DF705 | - |

## DF 708 WI-D

øext. 240 mm øint. 125 — 3,5 — OE

| BRAND MARCA | MODEL MODELO | C.C. | YEAR | FRONT | REAR |
|---|---|---|---|---|---|
| **DERBI** | | | | | |
| SENDA SM DRD | | 50 | 02-04 | DF708 | DF698 |
| SENDA SM DRD LIMITED | | 50 | 05- | DF708 | DF709 |

## DF 709 W

øext. 218 mm øint. 57 — 3,5 — OE

| BRAND MARCA | MODEL MODELO | C.C. | YEAR | FRONT | REAR |
|---|---|---|---|---|---|
| **DERBI** | | | | | |
| SENDA SM DRD LIMITED | | 50 | 05- | DF708 | DF709 |

## DF 714 W

øext. 240 mm øint. 105 — 4,0 — OE

| BRAND MARCA | MODEL MODELO | C.C. | YEAR | FRONT | REAR |
|---|---|---|---|---|---|
| **PIAGGIO** | | | | | |
| MP 3 125 | | 125 | 06-08 | DF714 | DF666 |
| MP 3 125 LT | | 125 | 09- | DF714 | DF666 |
| MP 3 125 YOURBAN | | 125 | 11- | DF714 | DF666 |
| MP 3 HYBRID | | 125 | 09- | DF714 | DF666 |

## DF 737 W

øext. 220 mm øint. 58 — 4,0 — OE

| BRAND MARCA | MODEL MODELO | C.C. | YEAR | FRONT | REAR |
|---|---|---|---|---|---|
| **BENELLI** | | | | | |
| ADIVA | | 125 | 00- | DF737 | |

| BRAND MARCA | MODEL MODELO | C.C. | YEAR | FRONT | REAR |
|---|---|---|---|---|---|
| **DERBI** | | | | | |
| BOULERVARD | | 125 | 03-06 | DF737 | - |
| **GILERA-PIAGGIO** | | | | | |
| RUNNER 50 | | 50 | 97-97 | DF737 | - |
| RUNNER 50 DD | | 50 | 98- | DF737 | DF705 |
| RUNNER 50 SP | | 50 | 98-04 | DF737 | DF705 |
| RUNNER 50 SP | | 50 | 05-05 | DF737 | DF705 |
| RUNNER 50 SP / PJ | | 50 | 06- | DF737 | DF705 |
| RUNNER 125 FX (G) | | 125 | 97-98 | DF737 | - |
| RUNNER 125 FX (H) | | 125 | 97-98 | DF737 | - |
| RUNNER 125 SP | | 125 | 99-00 | DF737 | DF666 |
| RUNNER 125 VX (G) | | 125 | 01- | DF737 | DF666 |
| RUNNER 125 VX (H) | | 125 | 01- | DF737 | DF666 |
| **PIAGGIO** | | | | | |
| NRG EXTREME AGUA | | 50 | 99- | DF737 | DF705 |
| NRG EXTREME AIRE | | 50 | 99- | DF737 | - |
| TYPHOON | | 50 | 11- | DF737 | - |
| SKIPPER LX (G) | | 125 | 98-99 | DF737 | - |
| SKIPPER LX (H) | | 125 | 98-99 | DF737 | - |
| SKR 125 ST 4T (G) | | 125 | 00- | DF737 | - |
| SKR 125 ST 4T (H) | | 125 | 00- | DF737 | - |
| TYPHOON 4T | | 125 | - | DF737 | - |

## DF 744 W

øext. 260 mm øint. 72 — 3,2 — OE

| BRAND MARCA | MODEL MODELO | C.C. | YEAR | FRONT | REAR |
|---|---|---|---|---|---|
| **BETA** | | | | | |
| AR-T | | 50 | 05- | DF744 | DF745 |

## DF 745 W

øext. 200 mm øint. 45 — 3,5 — OE

| BRAND MARCA | MODEL MODELO | C.C. | YEAR | FRONT | REAR |
|---|---|---|---|---|---|
| **BETA** | | | | | |
| AR-T | | 50 | 05- | DF744 | DF745 |

## DF 758 W

øext. 200 mm øint. 63 — 4,0 — OE

| BRAND MARCA | MODEL MODELO | C.C. | YEAR | FRONT | REAR |
|---|---|---|---|---|---|
| **RIEJU** | | | | | |
| MRT PRO 50 | | 50 | 09- | DF759 | DF758 |
| MRT SM PRO 50 | | 50 | 09- | DF759 | DF758 |
| MRX 50 PRO | | 50 | 08- | DF759 | DF758 |

## DF 759 W

øext. 300 mm øint. 108 — 4,0 — OE

| BRAND MARCA | MODEL MODELO | C.C. | YEAR | FRONT | REAR |
|---|---|---|---|---|---|
| **DERBI** | | | | | |
| SENDA SM DRD 50 EVO | | 50 | 09- | DF759 | DF698 |
| **RIEJU** | | | | | |
| MRT PRO 50 | | 50 | 09- | DF759 | DF758 |
| MRT SM PRO 50 | | 50 | 09- | DF759 | DF758 |
| MRX 50 PRO | | 50 | 08- | DF759 | DF758 |

## DF 789 CW

øext. 280 mm øint. 60 — 4,0 — OE

| BRAND MARCA | MODEL MODELO | C.C. | YEAR | FRONT | REAR |
|---|---|---|---|---|---|
| **KTM** | | | | | |
| 125 DUKE | | 125 | 11- | DF789 | DF790 |
| RC 125 | | 125 | 14- | DF789 | DF790 |

## DF 790 W

øext. 230 mm øint. 104 — 4,0 — OE

| BRAND MARCA | MODEL MODELO | C.C. | YEAR | FRONT | REAR |
|---|---|---|---|---|---|
| **KTM** | | | | | |
| 125 DUKE | | 125 | 11- | DF789 | DF790 |
| 125 DUKE ABS | | 125 | 14- | DF800 | DF790 |
| RC 125 | | 125 | 14- | DF789 | DF790 |

## DF 796 W

øext. 260 mm øint. 95 — 3,0 — OE

| BRAND MARCA | MODEL MODELO | C.C. | YEAR | FRONT | REAR |
|---|---|---|---|---|---|
| **KTM** | | | | | |
| FREERIDE | | EL | 12-14 | DF796 | DF797 |
| FREERIDE E-SX | | EL | 15- | DF796 | DF797 |
| FREERIDE E-XC | | EL | 15- | DF796 | DF797 |

## DF 797 W

øext. 210 mm øint. 109 — 4,0 — OE

| BRAND MARCA | MODEL MODELO | C.C. | YEAR | FRONT | REAR |
|---|---|---|---|---|---|
| **KTM** | | | | | |
| FREERIDE | | EL | 12-14 | DF796 | DF797 |
| FREERIDE E-SX | | EL | 15- | DF796 | DF797 |
| FREERIDE E-XC | | EL | 15- | DF796 | DF797 |

## DF 800 CW

øext. 300 mm øint. 60 — 5,0 — OE

| BRAND MARCA | MODEL MODELO | C.C. | YEAR | FRONT | REAR |
|---|---|---|---|---|---|
| **KTM** | | | | | |
| 125 DUKE ABS | | 125 | 14- | DF800 | DF790 |

## DF 811 W

øext. 280 mm øint. 90 — 4,0 — OE

| BRAND MARCA | MODEL MODELO | C.C. | YEAR | FRONT | REAR |
|---|---|---|---|---|---|
| **CONTI** | | | | | |
| PROMO CUP | | 50 | 04- | DF811 | DF810 |
| **MOTORHISPANIA** | | | | | |
| RYZ PRO SM | | 50 | 09- | DF811 | |
| URBAN BIKE | | 50 | 04- | DF811 | DF861 |

## DF 860 W

øext. 300 mm øint. 90 — 4,0 — OE

| BRAND MARCA | MODEL MODELO | C.C. | YEAR | FRONT | REAR |
|---|---|---|---|---|---|
| **APRILIA** | | | | | |
| | RS 4 125 | 125 | 11- | DF860 | |
| **MOTORHISPANIA** | | | | | |
| | RX 50 R | 50 | 08- | DF860 | DF861 |
| | KN 1 NAKED | 125 | 10- | DF860 | DF861 |
| | KN 2 NAKED | 125 | 14- | DF860 | DF861 |
| | MH 7 NAKED | 125 | 07- | DF860 | DF861 |
| | RX 125 R | 125 | 08- | DF860 | DF861 |

## DF 861 W

øext. 220 mm øint. 57 — 4,0 — OE

| BRAND MARCA | MODEL MODELO | C.C. | YEAR | FRONT | REAR |
|---|---|---|---|---|---|
| **MOTORHISPANIA** | | | | | |
| | MH 10 50 LC SM | 50 | 12- | DF888 | DF861 |
| | RX 50 R | 50 | 08- | DF860 | DF861 |
| | URBAN BIKE | 50 | 04- | DF811 | DF861 |
| | KN 1 NAKED | 125 | 10- | DF860 | DF861 |
| | KN 2 NAKED | 125 | 14- | DF860 | DF861 |
| | MH 7 NAKED | 125 | 07- | DF860 | DF861 |
| | RX 125 R | 125 | 08- | DF860 | DF861 |

## DF 863 W / DF 863 RW

øext. 180 mm øint. 58 — 3,5 — OE

| BRAND MARCA | MODEL MODELO | C.C. | YEAR | FRONT | REAR |
|---|---|---|---|---|---|
| **PEUGEOT** | | | | | |
| | SPEEDFIGHT | 50 | 96- | DF863 | - |
| | SPEEDFIGHT 2 | 50 | 00- | DF863 | - |
| | SPEEDFIGHT LC | 50 | 97- | DF863 | DF863 |
| | SPEEDFIGHT 80 | 80 | 96- | DF863 | - |
| | SPEEDFIGHT 100 | 100 | 97- | DF863 | DF863 |
| | SPEEDFIGHT 100 | 100 | 97- | DF863 | DF863 |

## DF 864 W

øext. 226 mm øint. 58 — 4,0 — OE

| BRAND MARCA | MODEL MODELO | C.C. | YEAR | FRONT | REAR |
|---|---|---|---|---|---|
| **PEUGEOT** | | | | | |
| | ELYSEO 100 | 100 | 98- | DF864 | - |
| | ELYSEO 125 | 125 | 98-00 | DF864 | - |
| | ELYSEO 125 | 125 | 01- | DF864 | DF864 |

## DF 878 W

øext. 180 mm øint. 58 — 4,0 — OE

| BRAND MARCA | MODEL MODELO | C.C. | YEAR | FRONT | REAR |
|---|---|---|---|---|---|
| **KYMCO** | | | | | |
| | AGILITY CARRY 50 | 50 | 14- | DF878 | - |
| | DINK 50 | 50 | 00- | DF878 | - |
| | FILLY 50 ELEGANCE | 50 | 03- | DF878 | - |
| | YUP | 50 | 02-03 | DF878 | - |
| | ZX 50 | 50 | 99- | DF878 | - |
| | TOP BOY 100 | 100 | 98- | DF878 | - |
| | DINK 125 | 125 | 97- | DF878 | DF878 |

## DF 887 W

øext. 220 mm øint. 110 — 4,5 — OE

| BRAND MARCA | MODEL MODELO | C.C. | YEAR | FRONT | REAR |
|---|---|---|---|---|---|
| **APRILIA** | | | | | |
| | RX 125 | 125 | 91-91 | DF617 | DF887 |
| | RX 125 | 125 | 92-92 | DF617 | DF887 |
| | RX 125 | 125 | 95- | | DF887 |
| | RX 125 C, CD | 125 | 93-94 | DF617 | DF887 |
| | TUAREG RALLY 125 | 125 | 91- | DF617 | DF887 |

## DF 888 W

øext. 280 mm øint. 108 — 3,5 — OE

| BRAND MARCA | MODEL MODELO | C.C. | YEAR | FRONT | REAR |
|---|---|---|---|---|---|
| **DERBI** | | | | | |
| | CROSS CITY | 125 | 09- | DF888 | DF698 |
| | MULHACEN 125 | 125 | 06- | DF888 | DF698 |
| | TERRA 4T 125 | 125 | 06- | DF888 | DF698 |
| **MOTORHISPANIA** | | | | | |
| | MH 10 50 LC | 50 | 12- | DF888 | DF889 |
| | MH 10 50 LC SM | 50 | 12- | DF888 | DF861 |
| | RYZ SM | 50 | 05- | DF888 | |

## DF 889 W

øext. 220 mm øint. 62 — 3,5 — OE

| BRAND MARCA | MODEL MODELO | C.C. | YEAR | FRONT | REAR |
|---|---|---|---|---|---|
| **HM** | | | | | |
| | CRE BAJA | 50 | 99-02 | DF674 | DF889 |
| | CRE BAJA | 50 | 03-08 | DF674 | DF889 |
| | CRE BAJA | 50 | 09- | | DF889 |
| | CRE BAJA RR | 50 | 09- | DF674 | DF889 |
| | CRE SIX | 50 | 99-02 | DF674 | DF889 |
| | CRE SIX | 50 | 03- | DF674 | DF889 |
| | CRE SIX COMPETICION | 50 | 09- | DF674 | DF889 |
| | DERAPAGE | 50 | 99-02 | DF699 | DF889 |
| | DERAPAGE | 50 | 03-08 | DF699 | DF889 |
| | DERAPAGE | 50 | 09- | DF699 | DF889 |
| | DERAPAGE COMPETICION | 50 | 09-10 | DF699 | DF889 |
| | DERAPAGE COMPETICION | 50 | 11- | DF699 | DF889 |
| **MOTORHISPANIA** | | | | | |
| | MH 10 50 LC | 50 | 12- | DF888 | DF889 |

## DF 892 W

øext. 260 mm øint. 108 — 4,0 — OE

| BRAND MARCA | MODEL MODELO | C.C. | YEAR | FRONT | REAR |
|---|---|---|---|---|---|
| **PEUGEOT** | | | | | |
| | XPS SM | 50 | 05- | DF892 | |

## DF 911 W

øext. 190 mm øint. 58 — 4,0 — OE

| BRAND MARCA | MODEL MODELO | C.C. | YEAR | FRONT | REAR |
|---|---|---|---|---|---|
| **HONDA** | | | | | |
| | MSX 125 | 125 | 13- | DF078 | DF911 |



**OE:** Original equipment (original replacement disc) · **OE:** Equipo original (disco de remplazo del original) For other models years previous to 1990 visit **www.galferonline.es** · Para otros modelos anteriores al año 1990 visitar **www.galferonline.es**
For consult TÜV (ABE) type approvals visit **www.galfermoto.com --> DOWNALOAD --> TÜV CERTIFICATIONS** · Para consultar las homologaciones TÜV (ABE) visitar **www.galfermoto.com --> DESCARGAS --> CERTIFICACIONES TÜV**

## MF 001

mm 95 x 20

| BRAND MARCA | MODEL MODELO | C.C. | YEAR | FRONT | REAR |
|---|---|---|---|---|---|
| **HONDA** | | | | | |
| DIO 50 | | 50 | 91-93 | FD149 | MF001 |
| DIO ZX 50 | | 50 | 94- | FD149 | MF001 |
| GP 50 DIO | | 50 | 92- | FD149 | MF001 |
| HSC 01-ZR | | 50 | 94- | FD149 | MF001 |
| NPS 50 ZOOMER | | 50 | 01- | MF001 | MF001 |
| PX WALLAROO | | 50 | 90- | MF001 | MF002 |
| **KYMCO** | | | | | |
| FEVER ZX 50 | | 50 | 97- | FD144 | MF001 |

## MF 002

mm 110 x 25

| BRAND MARCA | MODEL MODELO | C.C. | YEAR | FRONT | REAR |
|---|---|---|---|---|---|
| **HONDA** | | | | | |
| BALI 50 SJ | | 50 | 95- | FD195 | MF002 |
| DAX 50 ST | | 50 | 93- | MF002 | MF002 |
| NH LEAD 50 | | 50 | 93- | MF002 | MF609 |
| PX WALLAROO | | 50 | 90- | MF001 | MF002 |
| SFX 50 | | 50 | 95- | FD153 | MF002 |
| SH 50 SCOOPY | | 50 | 96- | FD153 | MF002 |
| SRX 50 SHADOW | | 50 | 97- | FD144 | MF002 |
| CRM 75 R | | 75 | 90-92 | FD095 | MF002 |
| CRM 75, R | | 75 | 93- | FD074 | MF002 |
| DAX ST 70 | | 75 | 90- | MF002 | MF002 |
| CUB EZ 90 | | 90 | 90- | MF002 | MF002 |
| NH 90 YUPI | | 90 | 91- | FD144 | MF002 |
| SRX 90 SHADOW | | 90 | 97- | FD144 | MF002 |
| BALI SJ 100 EX | | 100 | 95- | FD195 | MF002 |
| SH 100 SCOOPY | | 100 | 96- | FD153 | MF002 |
| MTX 125 R2HI | | 125 | 91- | FD074 | MF002 |
| KYMCO | | | | | |
| 50 SNIPER | | 50 | 94- | FD166 | MF002 |
| CURIO CX | | 50 | 94- | FD166 | MF002 |
| FILLY 50 | | 50 | 00- | FD144 | MF002 |
| FILLY 50 ELEGANCE | | 50 | 03- | FD187 | MF002 |
| HEROISM 50 | | 50 | 95- | FD175 | MF002 |
| KB 50 | | 50 | 95- | FD144 | MF002 |
| KYMCOSENTO 50 | | 50 | 13- | FD145 | MF002 |
| NEWSENTO 50 | | 50 | 13- | FD145 | MF002 |
| SCOUT 50 | | 50 | 99- | FD144 | MF002 |
| VISA R | | 50 | 11- | FD075 | MF002 |
| VISA R | | 110 | 11- | FD075 | MF002 |
| HEROISM | | 125 | 95- | FD175 | MF002 |
| **MALAGUTI** | | | | | |
| F12 PHANTOM | | 50 | 98- | FD084 | MF002 |
| F12 PHANTOM AIRE/AGUA 50 | | 50 | 94-97 | FD071 | MF002 |
| **P.G.O.** | | | | | |
| STAR | | 50 | 93- | MF002 | MF609 |
| **PEUGEOT** | | | | | |
| BUXY 50 | | 50 | 94- | FD153 | MF002 |
| ELYSEO | | 50 | 98- | FD065 | MF002 |
| LOOXOR | | 50 | 01- | FD065 | MF002 |
| LUDIX 50 ELEGANCE/SNAKE/TREND | | 50 | 04- | FD065 | MF002 |
| METROPOLIS 50 | | 50 | 91- | MF002 | MF609 |
| SPEEDDAKE | | 50 | 95- | FD153 | MF002 |
| SPEEDFIGHT | | 50 | 96- | FD094 | MF002 |
| SPEEDFIGHT 2 | | 50 | 00- | FD094 | MF002 |
| SPEEDFIGHT 3 | | 50 | 09- | FD073 | MF002 |
| SQUAB | | 50 | 95- | FD065 | MF002 |
| SV 50 APS, GEO | | 50 | 91- | MF002 | MF002 |
| SV 50 D, SPORT, T | | 50 | 94- | FD147 | MF002 |
| SV 50 GEO | | 50 | 92-92 | FD147 | MF002 |
| SV 50 GEO | | 50 | 93- | FD144 | MF002 |
| SV EXECUTIVE | | 50 | 95- | FD065 | MF002 |
| SV GEO | | 50 | 91- | MF002 | MF002 |
| TREKKER OFF ROAD | | 50 | 97- | FD094 | MF002 |
| TREKKER ROAD | | 50 | 97- | FD065 | MF002 |
| V-CLIC 50 | | 50 | 08- | FD136 | MF002 |
| VIVACITY | | 50 | 99- | FD065 | MF002 |
| VIVACITY SIXTIES | | 50 | 10- | FD175 | MF002 |
| ZENITH | | 50 | 94-94 | FD147 | MF002 |
| ZENITH 50 | | 50 | 93-93 | FD147 | MF002 |
| ZENITH LM | | 50 | 95- | FD065 | MF002 |
| METROPOLIS 80 | | 80 | 91- | MF002 | MF609 |
| SPEEDFIGHT 80 | | 80 | 96- | FD094 | MF002 |
| ELYSEO 100 | | 100 | 98- | FD065 | MF002 |
| TREKKER ROAD | | 100 | 98- | FD065 | MF002 |
| VIVACITY | | 100 | 99- | FD065 | MF002 |
| ELYSEO 125 | | 125 | 98-00 | FD065 | MF002 |
| GEO SV | | 125 | 92- | FD147 | MF002 |
| LUDIX 125 | | 125 | 04- | FD065 | MF002 |
| SV EXECUTIVE/GEO | | 125 | 91-94 | FD147 | MF002 |
| SV EXECUTIVE/GEO | | 125 | 95- | FD144 | MF002 |
| E-VIVACITY | | EL | 10- | FD187 | MF002 |
| **RIEJU** | | | | | |
| CROSSER CR1 | | 50 | 96- | FD071 | MF002 |
| F 10 JET LINE | | 50 | 95- | FD153 | MF002 |
| FIRST | | 50 | 95- | FD071 | MF002 |
| **SYM** | | | | | |
| X PRO 50 | | 50 | 13- | FD145 | MF002 |
| X PRO 125 | | 125 | 13- | FD145 | MF002 |
| EVIE | | EL | 10- | MF002 | MF002 |
| SYMMETRY | | EL | 11- | MF002 | MF002 |
| WOO | | EL | 11- | FD113 | MF002 |

## MF 003

mm 110 x 25

| BRAND MARCA | MODEL MODELO | C.C. | YEAR | FRONT | REAR |
|---|---|---|---|---|---|
| **HONDA** | | | | | |
| CB 50 | | 50 | 95- | FD266 | MF003 |
| MG 50 MAGNA | | 50 | 02- | FD095 | MF003 |
| NX 125 ( I ) | | 125 | 90-92 | FD074 | MF003 |
| NX 125 ( I ) TRANSCITY | | 125 | 93- | FD074 | MF003 |
| XL 125 P3 ( I ) | | 125 | 91-97 | FD074 | MF003 |
| XL 125 R | | 125 | 98-00 | FD164 | MF003 |
| XR 125 L | | 125 | 03- | FD164 | MF003 |

## MF 005

mm 130 x 30

| BRAND MARCA | MODEL MODELO | C.C. | YEAR | FRONT | REAR |
|---|---|---|---|---|---|
| **HONDA** | | | | | |
| CA 125 REBEL | | 125 | 95-98 | FD187 | MF005 |
| CA 125 REBEL | | 125 | 99- | FD195 | MF005 |
| VT 125 SHADOW | | 125 | 00- | FD145 | MF005 |

## MF 008

mm 110 x 25

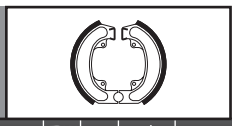

| BRAND MARCA | MODEL MODELO | C.C. | YEAR | FRONT | REAR |
|---|---|---|---|---|---|
| **HONDA** | | | | | |
| SGX 50 SKY | | 50 | 97- | FD153 | MF008 |

## MF 044

mm 160 x 30

| BRAND MARCA | MODEL MODELO | C.C. | YEAR | FRONT | REAR |
|---|---|---|---|---|---|
| **HONDA** | | | | | |
| PANTHEON 125 | | 125 | 98-02 | FD207 | MF044 |

## MF 051

mm 125 x 25

| BRAND MARCA | MODEL MODELO | C.C. | YEAR | FRONT | REAR |
|---|---|---|---|---|---|
| **HONDA** | | | | | |
| NSC 50 AC | | 50 | 13- | FD439 | MF051 |
| NSC 50 C | | 50 | 13- | FD439 | MF051 |
| NSC 50 R | | 50 | 13- | FD439 | MF051 |
| VISION 50 | | 50 | 12- | FD439 | MF051 |
| SCV 100 LEAD | | 100 | 03-07 | MF051 | MF051 |
| SCV 110 LEAD | | 110 | 08- | FD063 | MF051 |
| VISION 110 AC | | 110 | 11- | FD439 | MF051 |
| VISION 110 WHB | | 110 | 11- | FD439 | MF051 |
| @ 125 | | 125 | 00- | FD284 | MF051 |
| CBF 125 | | 125 | 09- | FD298 | MF051 |
| DYLAN 125 | | 125 | 02- | FD284 | MF051 |
| PCX 125 | | 125 | 10- | FD439 | MF051 |
| PS 125i | | 125 | 06- | FD284 | MF051 |
| SH 125 i SCOOPY | | 125 | 05-08 | FD284 | MF051 |
| SH 125 i SCOOPY (TAMBOR TRAS) | | 125 | 09-12 | FD284 | MF051 |
| SH 125 MODE | | 125 | 13- | FD439 | MF051 |
| SH 125 SCOOPY | | 125 | 01-04 | FD284 | MF051 |
| **HONDA BRAZIL** | | | | | |
| LEAD 110 | | 100 | 08- | FD063 | MF051 |
| **HONDA INDONESIA** | | | | | |
| PCX 125 | | 125 | 10- | FD439 | MF051 |

## MF 151

mm 130 x 28

| BRAND MARCA | MODEL MODELO | C.C. | YEAR | FRONT | REAR |
|---|---|---|---|---|---|
| **KAWASAKI** | | | | | |
| ELIMINATOR | | 125 | 98-99 | FD095 | MF151 |
| ELIMINATOR | | 125 | 00- | FD117 | MF151 |
| **SUZUKI** | | | | | |
| DR 125 S | | 125 | 93-97 | FD076 | MF151 |
| DR 125 SE | | 125 | 94- | FD076 | MF151 |
| EN 125 | | 125 | 05- | FD086 | MF151 |
| GN 125 | | 125 | 93- | FD075 | MF151 |
| TU 125 | | 125 | 00- | FD209 | MF151 |

## MF 301

mm 120 x 35

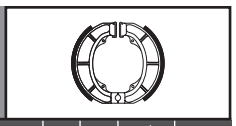

| BRAND MARCA | MODEL MODELO | C.C. | YEAR | FRONT | REAR |
|---|---|---|---|---|---|
| **DERBI** | | | | | |
| ATLANTIS | | 50 | 99- | FD065 | MF301 |
| HUNTER 50 | | 50 | 96- | FD065 | MF301 |
| PADDOCK 50 | | 50 | 96- | FD065 | MF301 |
| PREDATOR 0.2 | | 50 | 99- | FD065 | MF301 |
| PROGRESS 50 | | 50 | 97- | FD065 | MF301 |
| RECORD 50 | | 50 | 98- | FD065 | MF301 |
| WAVE | | 50 | 00- | FD065 | MF301 |
| ATLANTIS 100 | | 100 | 01- | FD065 | MF301 |

| | | | | |
|---|---|---|---|---|
| ATLANTIS 100 4T | 100 | 01- | FD065 | MF301 |
| **ITALJET** | | | | |
| VELOCIFERO | 50 | 94- | MF301 | MF301 |
| **PIAGGIO** | | | | |
| DIESIS | 50 | 03- | FD065 | MF301 |
| **SUZUKI** | | | | |
| ADDRESS | 50 | 92-94 | MF301 | MF301 |
| ADDRESS | 50 | 95- | FD153 | MF301 |
| AH 50 ADDRESS | 50 | 94- | FD094 | MF301 |
| AJ ZZ SEPIA | 50 | 93- | FD094 | MF301 |
| AP 50 | 50 | 94- | FD153 | MF301 |
| KATANA 50 | 50 | 97-98 | FD153 | MF301 |
| R7 ADDRESS 50 | 50 | 96- | FD153 | MF301 |
| RF 50 | 50 | 95- | FD153 | MF301 |
| ZILLION 50 | 50 | 99- | FD065 | MF301 |
| ZZ 50 | 50 | 94- | FD094 | MF301 |
| AH 80 ADDRESS | 80 | 92- | FD094 | MF301 |
| CP ADRRESS | 80 | 92- | FD094 | MF301 |
| AN VECSTAR | 125 | 95- | FD177 | MF301 |

## MF 302

mm 80 x 17

| BRAND MARCA | MODEL MODELO | C.C. | YEAR | FRONT | REAR |
|---|---|---|---|---|---|
| **SUZUKI** | | | | | |
| AH 75 | | 75 | 92- | MF302 | MF302 |

## MF 451

mm 130 x 28

| BRAND MARCA | MODEL MODELO | C.C. | YEAR | FRONT | REAR |
|---|---|---|---|---|---|
| **PEUGEOT** | | | | | |
| SUM-UP | | 125 | 08- | FD095 | MF451 |

## MF 452

mm 150 x 25

| BRAND MARCA | MODEL MODELO | C.C. | YEAR | FRONT | REAR |
|---|---|---|---|---|---|
| **CPI** | | | | | |
| ARAGON /GP 125 | | 125 | 07- | FD175 | MF452 |

## MF 453

mm 110 x 25

| BRAND MARCA | MODEL MODELO | C.C. | YEAR | FRONT | REAR |
|---|---|---|---|---|---|
| **ADLY** | | | | | |
| CAT 50 | | 50 | 06- | FD136 | MF453 |
| JET 50 | | 50 | 06- | FD136 | MF453 |
| MOTO FOX PLUS | | 50 | 02- | FD094 | MF453 |
| MOTO SILVER FOX | | 50 | 02- | FD094 | MF453 |
| NOBLE 50 | | 50 | 05- | FD094 | MF453 |
| PANTHER 50 | | 50 | 02- | FD094 | MF453 |
| PISTA 50 | | 50 | 05- | FD136 | MF453 |
| ROAD RACER 50 | | 50 | 04- | FD136 | MF453 |
| SILVER FOX 50 | | 50 | 06- | FD094 | MF453 |
| THUNDER BIKE 50 | | 50 | 06- | FD094 | MF453 |
| PISTA 70 | | 70 | 05- | FD136 | MF453 |
| ROAD RACER 90 | | 90 | 04- | FD136 | MF453 |
| CAT 100 | | 100 | 06- | FD136 | MF453 |
| JET 100 | | 100 | 06- | FD136 | MF453 |
| NOBLE 100 | | 100 | 05- | FD094 | MF453 |
| PANTHER 100 | | 100 | 02- | FD094 | MF453 |
| ROAD RACER 100 | | 100 | 04- | FD136 | MF453 |
| SILVER FOX 100 | | 100 | 06- | FD094 | MF453 |
| THUNDER BIKE 100 | | 100 | 06- | FD094 | MF453 |
| CAT 125 | | 125 | 06- | FD136 | MF453 |
| NOBLE 125 | | 125 | 05- | FD094 | MF453 |
| **MBK MOTOBEKANE** | | | | | |
| FIZZ | | 50 | 94- | FD153 | MF453 |
| **TGB** | | | | | |
| 101 | | 50 | 05- | FD188 | MF453 |
| 42 RACING 50 | | 50 | 06- | FD252 | MF453 |
| 101 | | 125 | 05- | FD188 | MF453 |
| 409 F | | 125 | 06- | FD252 | MF453 |
| 42 RACING 125 | | 125 | 06- | FD252 | MF453 |
| **YAMAHA** | | | | | |
| BELUGA 50 | | 50 | 90- | MF453 | MF460 |
| BREEZE 50 | | 50 | 95- | FD153 | MF453 |
| BW'S 50 | | 50 | 91-92 | MF453 | MF453 |
| BW'S 50 R | | 50 | 95-95 | FD170 | MF453 |
| BW'S BUMP | | 50 | 96- | FD171 | MF453 |
| BW'S NAKED | | 50 | 06- | FD153 | MF453 |
| BW'S NEXT GENERATION 50 | | 50 | 96- | FD153 | MF453 |
| BW'S SPY 50 | | 50 | 95-95 | FD153 | MF453 |
| BW'S WHEEL12" | | 50 | 06- | FD153 | MF453 |
| DT 50 LCD | | 50 | 96-03 | FD084 | MF453 |
| DT 50 R | | 50 | 94-95 | FD079 | MF453 |
| SLIDER | | 50 | 99- | FD206 | MF453 |
| WHY YH 50 | | 50 | 98- | FD153 | MF453 |
| BW'S 65 | | 65 | 95- | FD170 | MF453 |
| BELUGA 80 | | 80 | 90- | MF453 | MF460 |
| JOG 90 | | 90 | 90- | FD136 | MF453 |

## MF 458

mm 110 x 25

| BRAND MARCA | MODEL MODELO | C.C. | YEAR | FRONT | REAR |
|---|---|---|---|---|---|
| **CPI** | | | | | |
| ARAGON /GP 50 | | 50 | 06- | FD175 | MF458 |
| FREAKY | | 50 | 07- | FD175 | MF458 |
| HUSSAR | | 50 | 01- | FD094 | MF458 |
| POPCORN | | 50 | 01- | FD175 | MF458 |
| **GENERIC** | | | | | |
| EPICO | | 50 | 10- | FD175 | MF458 |
| IDEO | | 50 | 05- | FD175 | MF458 |
| ONIX | | 50 | 10- | FD153 | MF458 |
| ROC | | 50 | 08- | FD175 | MF458 |
| XOR | | 50 | 05- | FD175 | MF458 |
| XOR 2 | | 50 | 10- | FD175 | MF458 |
| IDEO 125 | | 125 | 05- | FD175 | MF458 |
| XOR 125 | | 125 | 05- | FD175 | MF458 |
| **MBK MOTOBEKANE** | | | | | |
| EVOLIS | | 50 | 92- | FD153 | MF458 |
| OVETTO | | 50 | 98- | FD153 | MF458 |
| TARGET | | 50 | 92- | FD136 | MF458 |
| FLAME | | 125 | 00-03 | FD079 | MF458 |
| FLAME X | | 125 | 04- | FD342 | MF458 |
| X - OVER | | 125 | 10- | FD473 | MF458 |
| **YAMAHA** | | | | | |
| CR 50 TARGET | | 50 | 91- | FD136 | MF458 |
| CR 50 Z | | 50 | 92-93 | FD079 | MF458 |
| CR 50 Z | | 50 | 94- | FD136 | MF458 |
| CT 50 SUPER SPORT | | 50 | 90- | MF458 | MF458 |
| NEO´S | | 50 | 97- | FD171 | MF458 |
| NEO´S 50 4T | | 50 | 09- | FD171 | MF458 |
| TARGET | | 50 | 94- | FD136 | MF458 |
| CR 90 TARGET | | 90 | 91- | FD136 | MF458 |
| BW'S 125 | | 125 | 10- | FD473 | MF458 |
| CIGNUS 125 | | 125 | 95-95 | MF640 | MF458 |
| CIGNUS 125 / R | | 125 | 96-02 | FD079 | MF458 |
| CIGNUS 125 X | | 125 | 03-06 | FD342 | MF458 |
| CIGNUS 125 X i | | 125 | 07- | FD342 | MF458 |
| SR 125 | | 125 | 98- | FD169 | MF458 |
| VINO 125 | | 125 | 03- | FD079 | MF458 |

## MF 460

mm 95 x 20

| BRAND MARCA | MODEL MODELO | C.C. | YEAR | FRONT | REAR |
|---|---|---|---|---|---|
| **YAMAHA** | | | | | |
| BELUGA 50 | | 50 | 90- | MF453 | MF460 |
| TT R 50 | | 50 | 06- | MF460 | MF630 |
| ZEST 50 | | 50 | 93- | FD170 | MF460 |
| BELUGA 80 | | 80 | 90- | MF453 | MF460 |
| ZEST 80 | | 80 | 94- | FD171 | MF460 |
| TT R 90 | | 90 | 00- | MF460 | MF630 |

## MF 461

mm 110 x 25

| BRAND MARCA | MODEL MODELO | C.C. | YEAR | FRONT | REAR |
|---|---|---|---|---|---|
| **YAMAHA** | | | | | |
| DT 80 LC | | 80 | 93- | FD079 | MF461 |

## MF 601

mm 150 x 24

| BRAND MARCA | MODEL MODELO | C.C. | YEAR | FRONT | REAR |
|---|---|---|---|---|---|
| **LML** | | | | | |
| STAR 2T (TODAS) | | 125 | 10- | FD200 | MF601 |
| STAR 4T (TODAS) | | 125 | 10- | FD200 | MF601 |
| STAR BICOLOR VINTAGE 4T | | 125 | 10- | FD200 | MF601 |
| STAR GT 2T | | 125 | 10- | FD200 | MF601 |
| STAR GT 4T | | 125 | 10- | FD200 | MF601 |
| STAR MAT SERIES 4T | | 125 | 10- | FD200 | MF601 |
| STAR RS 4T | | 125 | 10- | FD200 | MF601 |

## MF 608

mm 110 x 30

| BRAND MARCA | MODEL MODELO | C.C. | YEAR | FRONT | REAR |
|---|---|---|---|---|---|
| **SUZUKI** | | | | | |
| DR 50 LC | | 50 | 94- | FD065 | MF608 |

## MF 609

mm 95 x 20

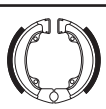

| BRAND MARCA | MODEL MODELO | C.C. | YEAR | FRONT | REAR |
|---|---|---|---|---|---|
| **HONDA** | | | | | |
| NH LEAD 50 | | 50 | 93- | MF002 | MF609 |
| **P.G.O.** | | | | | |
| STAR | | 50 | 93- | MF002 | MF609 |
| STAR 50 | | 50 | 95- | FD094 | MF609 |
| BIG MAX 80 | | 80 | 95- | FD136 | MF609 |
| STAR 80 | | 80 | 95- | FD094 | MF609 |
| **PEUGEOT** | | | | | |
| METROPOLIS 50 | | 50 | 91- | MF002 | MF609 |

| | | | | |
|---|---|---|---|---|
| METROPOLIS 80 | 80 | 91- | MF002 | MF609 |

## MF 617 — mm 105 x 20

| BRAND MARCA | MODEL MODELO | C.C. | YEAR | FRONT | REAR |
|---|---|---|---|---|---|
| **PIAGGIO** | | | | | |
| | ZIP | 50 | 92-92 | MF617 | MF621 |

## MF 618 — mm 90 x 18

| BRAND MARCA | MODEL MODELO | C.C. | YEAR | FRONT | REAR |
|---|---|---|---|---|---|
| **PIAGGIO** | | | | | |
| | FREE | 50 | 94-95 | MF618 | MF631 |

## MF 620 — mm 110 x 25

| BRAND MARCA | MODEL MODELO | C.C. | YEAR | FRONT | REAR |
|---|---|---|---|---|---|
| **PIAGGIO** | | | | | |
| | SFERA | 50 | 90-95 | MF620 | MF621 |
| | SFERA 75 | 75 | 90- | MF620 | MF621 |

## MF 621 — mm 100 x 20

| BRAND MARCA | MODEL MODELO | C.C. | YEAR | FRONT | REAR |
|---|---|---|---|---|---|
| **GILERA-PIAGGIO** | | | | | |
| | 50 TYPHOON | 50 | 93- | FD153 | MF621 |
| | 125 TYPHOON | 125 | 95- | FD153 | MF621 |
| **PIAGGIO** | | | | | |
| | NRG | 50 | 94-98 | FD153 | MF621 |
| | NRG EXTREME AIRE | 50 | 99- | FD153 | MF621 |
| | NTT | 50 | 95- | FD153 | MF621 |
| | QUARTZ | 50 | 92- | FD152 | MF621 |
| | SFERA | 50 | 90-95 | MF620 | MF621 |
| | SFERA | 50 | 96- | FD197 | MF621 |
| | STORM | 50 | 94- | FD153 | MF621 |
| | TYPHOON | 50 | 94-95 | FD153 | MF621 |
| | ZIP | 50 | 92-92 | MF617 | MF621 |
| | SFERA 75 | 75 | 90- | MF620 | MF621 |
| | TYPHOON | 80 | 95-95 | FD153 | MF621 |
| | TYPHOON | 125 | 95-95 | FD153 | MF621 |

## MF 625 — mm 105 x 25

| BRAND MARCA | MODEL MODELO | C.C. | YEAR | FRONT | REAR |
|---|---|---|---|---|---|
| **DERBI** | | | | | |
| | AVENTURA | 50 | 96- | FD065 | MF625 |
| | FENIX | 50 | 93- | FD065 | MF625 |
| | FURAX 50 | 50 | 96- | FD065 | MF625 |
| | SENDA | 50 | 93-95 | FD065 | MF625 |
| | URBAN, BOX | 50 | 94- | MF625 | MF625 |
| | VAMOS | 50 | 94-94 | FD065 | MF625 |
| | VAMOS R | 50 | 95-95 | FD170 | MF625 |
| | VAMOS R | 50 | 96- | FD065 | MF625 |
| | VARIANT SPORT R | 50 | 94- | FD065 | MF625 |

## MF 630 — mm 110 x 25

| BRAND MARCA | MODEL MODELO | C.C. | YEAR | FRONT | REAR |
|---|---|---|---|---|---|
| **APRILIA** | | | | | |
| | AMICO 50 | 50 | 90-91 | MF630 | MF630 |
| | AMICO 50 GL,GLE,LX,SPORT LIFE,LX | 50 | 92- | FD153 | MF630 |
| | GULLIVER 50 | 50 | 95-95 | FD153 | MF630 |
| | GULLIVER 50 LC | 50 | 96-97 | FD153 | MF630 |
| | Mc GULLIVER 50 | 50 | 98- | FD153 | MF630 |
| | RALLY 50 | 50 | 94-95 | FD153 | MF630 |
| | SCARABEO 4 T | 50 | 04- | FD234 | MF630 |
| | SONIC | 50 | 98- | FD153 | MF630 |
| | SONIC GP | 50 | 98- | FD153 | MF630 |
| | SPICE SONIC GP | 50 | 98- | FD153 | MF630 |
| | SR 50 | 50 | 93-93 | FD153 | MF630 |
| | SR 50 ACQUA | 50 | 95-96 | FD153 | MF630 |
| | SR 50 EUROPA, URBAND KID, VIPER | 50 | 94-94 | FD171 | MF630 |
| | SR 50 REPLICA | 50 | 92-92 | FD153 | MF630 |
| | SR 50 REPLICA | 50 | 93-93 | FD170 | MF630 |
| | SR 50 URBAN | 50 | 92-92 | FD153 | MF630 |
| | SR 50 VIPER | 50 | 92-92 | FD153 | MF630 |
| | SR 50 VIPER | 50 | 94-94 | FD171 | MF630 |
| | SCARABEO 70 | 70 | 94- | FD153 | MF630 |
| | SCARABEO 100 | 100 | 00-03 | FD153 | MF630 |
| | SCARABEO 100 4T | 100 | 04- | FD234 | MF630 |
| | COMPAY | 125 | 03- | FD153 | MF630 |
| | MOJITO 125 | 125 | 05- | FD153 | MF630 |
| **BETA** | | | | | |
| | CHRONO 50 | 50 | 94- | FD153 | MF630 |
| | QUADRA | 50 | 94- | FD153 | MF630 |
| | TEMPO 50 | 50 | 94- | FD084 | MF630 |
| **CAGIVA** | | | | | |
| | CITY 50 | 50 | 93- | FD149 | MF630 |
| **KTM** | | | | | |
| | 50 SCOOTER | 50 | 94- | FD153 | MF630 |
| **MALAGUTI** | | | | | |
| | 50 CENTRO SL | 50 | 94- | FD152 | MF630 |
| | 50 F10 | 50 | 96- | FD153 | MF630 |
| | F 15 FIRE FOX | 50 | 96-97 | FD071 | MF630 |
| | F10 | 50 | 91- | FD135 | MF630 |
| **RIEJU** | | | | | |
| | WINDY | 50 | 94- | FD065 | MF630 |
| **SCARABEO** | | | | | |
| | 50 2T | 50 | 14- | FD135 | MF630 |
| | 50 4T | 50 | 14- | FD135 | MF630 |
| | 100 4T | 100 | 14- | FD135 | MF630 |
| **SYM** | | | | | |
| | JUNGLE | 50 | 99- | FD188 | MF630 |
| | MASK /LC | 50 | 00- | FD188 | MF630 |
| **YAMAHA** | | | | | |
| | AXIS 50 (I) | 50 | 93- | FD170 | MF630 |
| | AXIS COSMO | 50 | 95- | FD153 | MF630 |
| | AXIS PLUS | 50 | 95- | FD153 | MF630 |
| | JOG | 50 | 92-93 | FD136 | MF630 |
| | JOG R | 50 | 94-01 | FD136 | MF630 |
| | TT R 50 | 50 | 06- | MF460 | MF630 |
| | TT R 90 | 90 | 00- | MF460 | MF630 |
| | TT R 125 | 125 | 00- | FD097 | MF630 |

## MF 631 — mm 104 x 20

| BRAND MARCA | MODEL MODELO | C.C. | YEAR | FRONT | REAR |
|---|---|---|---|---|---|
| **PIAGGIO** | | | | | |
| | FREE | 50 | 94-95 | MF618 | MF631 |
| | FREE 50 | 50 | 96- | FD152 | MF631 |
| | ZIP 4T | 50 | 00- | FD200 | MF631 |
| | ZIP CATALIZADA | 50 | 00- | FD200 | MF631 |
| | ZIP FAST-RIDER | 50 | 93-95 | FD153 | MF631 |
| | ZIP SP LC | 50 | 96-99 | FD200 | MF631 |

## MF 636 — mm 110 x 25

| BRAND MARCA | MODEL MODELO | C.C. | YEAR | FRONT | REAR |
|---|---|---|---|---|---|
| **GILERA-PIAGGIO** | | | | | |
| | RUNNER 50 | 50 | 97-97 | FD153 | MF636 |
| **PIAGGIO** | | | | | |
| | VESPA 50 ET2 | 50 | 00- | FD200 | MF636 |
| | VESPA 50 ET4 | 50 | 01- | FD200 | MF636 |
| | VESPA 50 S 4V | 50 | 09- | FD200 | MF636 |
| | ZIP 100 | 100 | 07- | FD200 | MF636 |
| | HEXAGON | 125 | 94-97 | FD153 | MF636 |
| | SFERA 4T | 125 | 96- | FD200 | MF636 |
| | SKIPPER | 125 | 93-97 | FD152 | MF636 |
| | VESPA ET4 | 125 | 96- | FD200 | MF636 |

## MF 637 — mm 110 x 22

| BRAND MARCA | MODEL MODELO | C.C. | YEAR | FRONT | REAR |
|---|---|---|---|---|---|
| **PIAGGIO** | | | | | |
| | SCATTO | 50 | 90- | MF637 | MF637 |

## MF 639 — mm 125 x 25

| BRAND MARCA | MODEL MODELO | C.C. | YEAR | FRONT | REAR |
|---|---|---|---|---|---|
| **APRILIA** | | | | | |
| | SCARABEO 50 | 50 | 96-97 | FD153 | MF639 |

## MF 640 — mm 130 x 28

| BRAND MARCA | MODEL MODELO | C.C. | YEAR | FRONT | REAR |
|---|---|---|---|---|---|
| **MBK MOTOBEKANE** | | | | | |
| | BOOSTER | 100 | 00- | FD136 | MF640 |
| | DOODO | 125 | 00- | FD153 | MF640 |
| | SKYLINER | 125 | 99-00 | FD138 | MF640 |
| **YAMAHA** | | | | | |
| | BW'S 100 | 100 | 00- | FD153 | MF640 |
| | NEO´S 100 | 100 | 00- | FD171 | MF640 |
| | BELUGA 125 XC | 125 | 93- | MF475 | MF640 |
| | CIGNUS 125 | 125 | 95-95 | MF640 | MF458 |
| | SP 125 MAGESTY | 125 | 98-00 | FD138 | MF640 |
| | TEO´S 125 | 125 | 00- | FD153 | MF640 |
| | XV 125 VIRAGO | 125 | 97-99 | FD169 | MF640 |
| | XVS 125 DRAG STAR | 125 | 00- | FD169 | MF640 |
| | YBR 125 | 125 | 05-06 | FD079 | MF640 |
| | YBR 125 | 125 | 07- | FD393 | MF640 |
| | YBR 125 CUSTOM | 125 | 08- | FD393 | MF640 |

## MF 684

160 x 30 mm

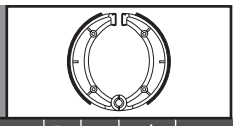

| BRAND MARCA | MODEL MODELO | C.C. | YEAR | FRONT | REAR |
|---|---|---|---|---|---|
| **LAVERDA** | | | | | |
| | 125 TOLEDO | 125 | 90- | FD089 | MF684 |

## MF 712

125 x 25 mm

| BRAND MARCA | MODEL MODELO | C.C. | YEAR | FRONT | REAR |
|---|---|---|---|---|---|
| **MALAGUTI** | | | | | |
| | 125 RUNNER RALLY | 125 | 93- | FD074 | MF712 |

## MF 717

110 x 20 mm

| BRAND MARCA | MODEL MODELO | C.C. | YEAR | FRONT | REAR |
|---|---|---|---|---|---|
| **PIAGGIO** | | | | | |
| | TYPHOON | 50 | 96-98 | FD153 | MF717 |
| | TYPHOON-X | 50 | 99-10 | FD153 | MF717 |
| | TYPHOON | 80 | 96- | FD153 | MF717 |
| | FLY 100 | 100 | 07- | FD277 | MF717 |
| | FREE 100 | 100 | 02- | FD153 | MF717 |
| | FLY 125 4T | 125 | 05- | FD277 | MF717 |
| | TYPHOON | 125 | 96-10 | FD153 | MF717 |

## MF 721

118 x 24 mm

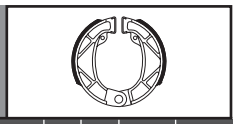

| BRAND MARCA | MODEL MODELO | C.C. | YEAR | FRONT | REAR |
|---|---|---|---|---|---|
| **APRILIA** | | | | | |
| | CLASSIC 50 | 50 | 93- | FD084 | MF721 |
| | RED ROSE 50 | 50 | 92- | FD084 | MF721 |
| | CLASSIC 80 | 80 | 93- | FD084 | MF721 |

## MF 723

120 x 25 mm

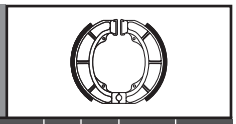

| BRAND MARCA | MODEL MODELO | C.C. | YEAR | FRONT | REAR |
|---|---|---|---|---|---|
| **APRILIA** | | | | | |
| | COMPAY | 50 | 02- | FD153 | MF723 |
| | HABANA | 50 | 98-01 | FD153 | MF723 |
| | HABANA CUSTOM | 50 | 98-01 | FD153 | MF723 |
| | MOJITO 50 | 50 | 02- | FD153 | MF723 |

## MF 732

110 x 25 mm

| BRAND MARCA | MODEL MODELO | C.C. | YEAR | FRONT | REAR |
|---|---|---|---|---|---|
| **ITALJET** | | | | | |
| | 50 CRUISE | 50 | 94- | FD136 | MF732 |
| | 50 PISTA | 50 | 94- | FD136 | MF732 |
| | 50 SCOOP | 50 | 94- | FD136 | MF732 |
| | BAZOOKA | 50 | 94- | FD136 | MF732 |
| | PISTA 2 | 50 | 92- | FD136 | MF732 |

## MF 740

130 x 25 mm

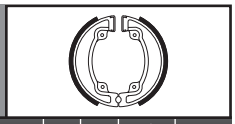

| BRAND MARCA | MODEL MODELO | C.C. | YEAR | FRONT | REAR |
|---|---|---|---|---|---|
| **KYMCO** | | | | | |
| | AGILITY 50 | 50 | 05- | FD187 | MF740 |
| | AGILITY RS 50 | 50 | 09- | FD187 | MF740 |
| | PEOPLE | 50 | 99- | FD261 | MF740 |
| | AGILITY 125 | 125 | 06-08 | FD187 | MF740 |
| | AGILITY RS 125 | 125 | 09- | FD187 | MF740 |
| | MOVIE | 125 | 97-08 | FD187 | MF740 |
| | MOVIE 125 S i | 125 | 09- | FD399 | MF740 |
| | PEOPLE | 125 | 99- | FD261 | MF740 |
| | VIVIO 125 | 125 | 99- | FD187 | MF740 |

## MF 750

90 x 18 mm

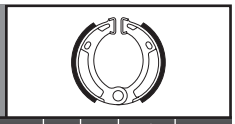

| BRAND MARCA | MODEL MODELO | C.C. | YEAR | FRONT | REAR |
|---|---|---|---|---|---|
| **MBK MOTOBEKANE** | | | | | |
| | BOOSTER N.G. | 50 | 99- | FD153 | MF750 |
| | BOOSTER NAKED | 50 | 06- | FD153 | MF750 |
| | BOOSTER SPIRIT | 50 | 98- | FD153 | MF750 |
| | BOOSTER WHEEL 12" | 50 | 06- | FD153 | MF750 |
| | BOOSTER-R | 50 | 94- | FD153 | MF750 |
| | BOOSTER | 100 | 99-99 | FD153 | MF750 |

## MF 760

104 x 22 mm

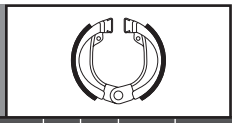

| BRAND MARCA | MODEL MODELO | C.C. | YEAR | FRONT | REAR |
|---|---|---|---|---|---|
| **PEUGEOT** | | | | | |
| | FOX | 50 | 95- | FD065 | MF760 |

## MF 765

152 x 25 mm

| BRAND MARCA | MODEL MODELO | C.C. | YEAR | FRONT | REAR |
|---|---|---|---|---|---|
| **LAMBRETTA** | | | | | |
| | 125 LI | 125 | 14- | MF765 | MF765 |

## MF 766

152 x 25 mm

| BRAND MARCA | MODEL MODELO | C.C. | YEAR | FRONT | REAR |
|---|---|---|---|---|---|
| **LAMBRETTA** | | | | | |
| | 125 DL | 125 | 14- | MF766 | MF766 |

GALFER MOTO

FD BRAKE PADS | DF DISC WAVE® | MF BRAKE SHOES

# Scooter Street Sport&GP

# ABOVE >125cc.

(from year1990)

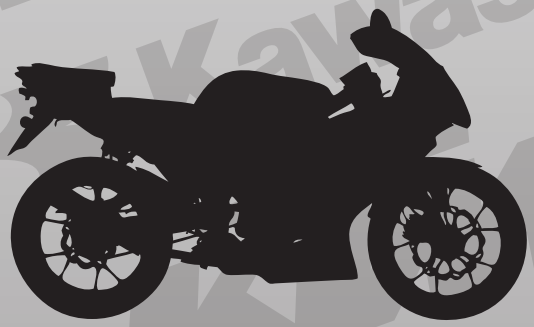

FOR ROAD GALFER Kit SEE PAGES 394-395

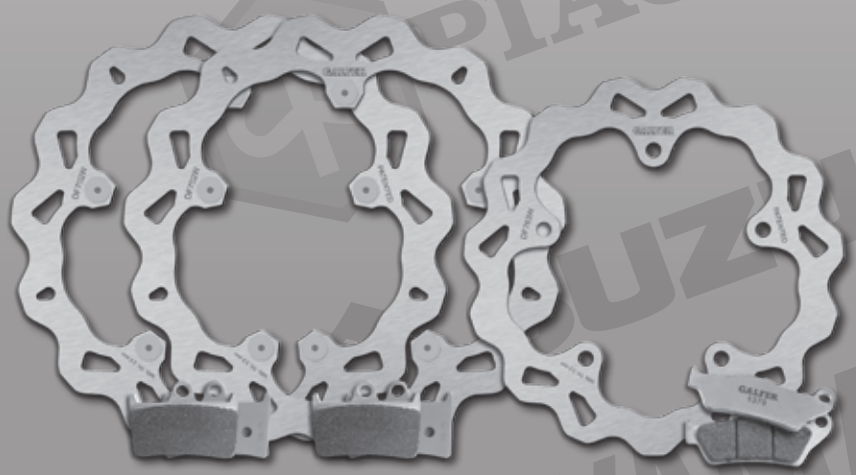

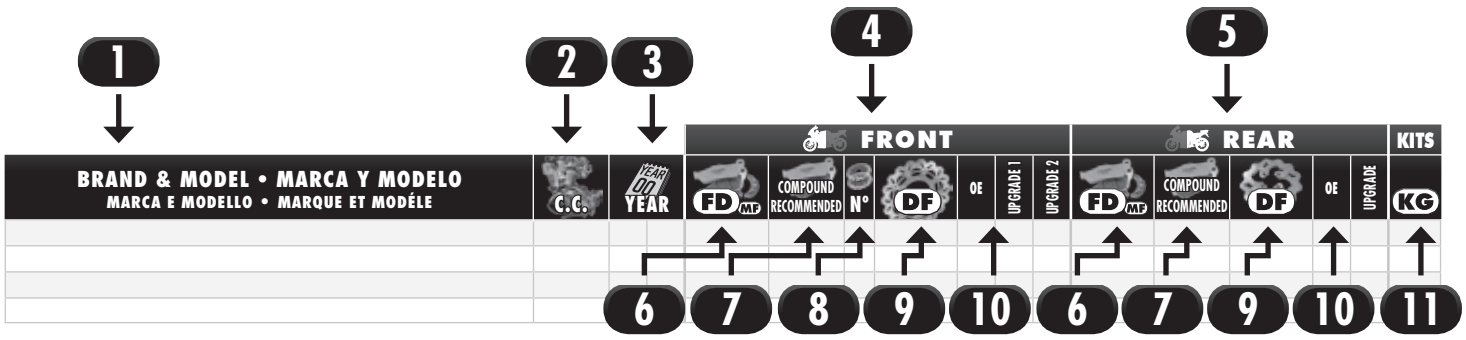


## DESCRIPTION • DESCRIPCIÓN • DESCRIZIONE • DESCRIPTION

**1**
**Brand and model of the motocycle**
**Marca y modelo de la moto**
Marca e modello del motociclo
Marque et modéle de la moto

**2**
**Cylinder capacity of the motocycle**
**Cilindrada de la moto**
Cilindrata del motociclo
Cylindrée de la moto

**3**
**Fabrication year of the motocycle**
**Año de fabricación de la moto**
Anno di produzione del motociclo
Année de fabrication de la moto

**4**
**Front zone of the motorcycle**
**Zona delantera de la moto**
Area anteriore del motociclo
Zone avant de la moto

**5**
**Rear zone of the motorcycle**
**Zona trasera de la moto**
Area posteriore del motociclo
Zone arrière de la moto

**6**
**Brake pads or shoes reference**
**Referencia de las pastillas o mordazas de freno**
Riferimento pastiglie o ganasce freno
Référence plaquettes ou mâchoires de frein

**7**
**Brake pads or shoes compound recommended for the motorcycle model**
**Compuesto recomendado de las pastillas o mordazas de freno para el modelo de moto**
Composti consigliata pastiglie o ganasce freno per il modello del motociclo
Composé recommandée plaquettes ou mâchoires de frein pour le modèle de moto

**8**
**Number of front brake discs**
**Número de discos de freno delanteros**
Numero di dischi freno anteriori
Nombre de disques de frein avant

**9**
**Brake disc reference**
**Referencia del disco de freno**
Riferimento disco freno
Référence disque de frein

**10**
**Brake disc options (OE: original equipment / Upgrade: more performance)**
**Opciones del disco de freno (OE: equipo original / Upgrade: más prestaciones)**
Opzioni disco freno (OE: attrezzatura originale / Upgrade: maggiori prestazioni)
Options disque de frein (OE: équipement original / Upgrade: plus de performance)

**11**
**Brake kit reference**
**Referencia del kit de freno**
Riferimento kit freno
Référence kit de frein

| BRAND & MODEL • MARCA Y MODELO<br>MARCA E MODELLO • MARQUE ET MODÉLE | C.C. | YEAR | | FRONT FD MF | FRONT COMPOUND RECOMMENDED | FRONT N° | FRONT DF | FRONT OE | FRONT UPGRADE 1 | FRONT UPGRADE 2 | REAR FD MF | REAR COMPOUND RECOMMENDED | REAR DF | REAR OE | REAR UPGRADE | KITS KG |
|---|---|---|---|---|---|---|---|---|---|---|---|---|---|---|---|---|
| **ADIVA** | | | | | | | | | | | | | | | | |
| AD 250 | 250 | 09 | | FD220 | G1054 | 1 | | | | | FD220 | G1054 | | | | |
| AD 400 | 400 | 09 | | FD220 | G1054 | 1 | | | | | FD220 | G1380 | | | | |
| **AEON** | | | | | | | | | | | | | | | | |
| NOX 150 | 150 | 06 | | FD094 | G1054 | 1 | | | | | MF | | - | | | |
| PULSAR 150 | 150 | 06 | | FD094 | G1054 | 1 | | | | | MF | | - | | | |
| ELITE 200i | 200 | 11 | | FD187 | G1054 | 1 | | | | | FD094 | G1054 | | | | |
| URBAN 350i | 350 | 11 | | FD187 | G1054 | 1 | | | | | FD094 | G1054 | | | | |
| **AP LOCKHEED** | | | | | | | | | | | | | | | | |
| REAR CALIPER 2P (CP7003/4226/7-2S0) | | | | | | | | | | | FD356 | G1054 | | | | |
| **APRILIA** | | | | | | | | | | | | | | | | |
| LEONARDO 150 4T | 150 | 98 | 98 | FD153 | G1054 | 1 | DF612 | W | | | FD153 | G1054 | DF629 | W | RW | |
| LEONARDO 150 4T | 150 | 99 | | FD234 | G1054 | 1 | DF612 | W | | | FD234 | G1054 | DF629 | W | RW | |
| SCARABEO 150 4T | 150 | 98 | | FD074 | G1054 | 1 | DF671 | W | FLW | | FD228 | G1054 | DF612 | W | | |
| SR 150 | 150 | 00 | | FD234 | G1054 | 1 | DF629 | W | RW | FLS | MF | | - | | | |
| ARRECIFE 200 | 200 | 03 | | FD245 | G1054 | 1 | | | | | FD228 | G1054 | DF648 | W | RW | |
| ATLANTIC 200 | 200 | 03 | | FD245 | G1054 | 1 | | | | | FD228 | G1054 | DF648 | W | RW | |
| SCARABEO 200 / GT | 200 | 02 | 06 | FD074 | G1054 | 1 | DF671 | W | FLW | | FD228 | G1054 | DF612 | W | | |
| SCARABEO 200 | 200 | 07 | | FD245 | G1054 | 1 | DF671 | W | FLW | | FD228 | G1054 | | | | |
| SPORT CITY 200 | 200 | 04 | | FD074 | G1054 | 1 | DF671 | W | FLW | | FD228 | G1054 | DF612 | W | | |
| ARRECIFE 250 SPRINT | 250 | 06 | | FD245 | G1054 | 1 | | | | | FD228 | G1054 | DF648 | W | RW | |
| ATLANTIC 250 SPRINT | 250 | 06 | | FD245 | G1054 | 1 | | | | | FD228 | G1054 | DF648 | W | RW | |
| LEONARDO 250 4T | 250 | 99 | | FD074 | G1054 | 1 | DF612 | W | | | FD228 | G1054 | | | | |
| REPLICA 250 | 250 | 92 | | FD068 | G1054 | 2 | | | | | FD065 | G1054 | | | | |
| RS 250 | 250 | 95 | 97 | FD068 | G1054 | 2 | | | | | FD153 | G1054 | DF669 | W | | |
| RS 250 | 250 | 98 | | FD176 | G1054 | 2 | | | | | FD153 | G1054 | DF669 | W | | |
| SCARABEO 250 | 250 | 04 | 04 | FD074 | G1054 | 1 | DF671 | W | FLW | | FD228 | G1054 | DF612 | W | | |
| SCARABEO 250 ie | 250 | 05 | | FD245 | G1054 | 1 | DF671 | W | FLW | | FD228 | G1054 | | | | |
| SPORT CITY 250 | 250 | 06 | | FD074 | G1054 | 2 | DF671 | W | FLW | | FD228 | G1054 | DF612 | W | | |
| ARRECIFE 300 | 300 | 10 | | FD245 | G1054 | 1 | | | | | FD228 | G1380 | | | | |
| ATLANTIC 300 | 300 | 10 | | FD245 | G1054 | 1 | | | | | FD228 | G1380 | | | | |
| LEONARDO 300 | 300 | 04 | | FD074 | G1054 | 1 | DF612 | W | | | FD228 | G1054 | | | | |
| SCARABEO 300 S | 300 | 09 | | FD245 | G1054 | 1 | DF671 | W | FLW | | FD228 | G1380 | | | | |
| SPORT CITY CUBE 300 | 300 | 08 | | FD074 | G1054 | 2 | DF671 | W | FLW | | FD228 | G1054 | DF612 | W | | |
| SR MAX 300 | 300 | 12 | | FD277 | G1054 | 1 | DF667 | W | | | FD277 | G1380 | DF666 | W | | |
| ARRECIFE 400 SPRINT | 400 | 07 | | FD245 | G1054 | 1 | DF671 | W | FLW | | FD228 | G1380 | | | | |
| ATLANTIC 400 SPRINT | 400 | 07 | | FD245 | G1054 | 1 | DF671 | W | FLW | | FD228 | G1380 | | | | |
| SCARABEO 400 ie | 400 | 07 | | FD074 | G1054 | 2 | DF671 | W | FLW | | FD228 | G1054 | | | | |
| ARRECIFE 500 | 500 | 02 | | FD074 | G1054 | 2 | DF671 | W | FLW | | FD228 | G1054 | DF612 | W | | |
| ARRECIFE 500 SPRINT | 500 | 05 | | FD245 | G1054 | 1 | DF671 | W | FLW | | FD228 | G1380 | DF612 | W | | |
| ATLANTIC 500 | 500 | 02 | | FD074 | G1054 | 2 | DF671 | W | FLW | | FD228 | G1054 | DF612 | W | | |
| ATLANTIC 500 SPRINT | 500 | 05 | | FD245 | G1054 | 1 | DF671 | W | FLW | | FD228 | G1380 | DF612 | W | | |
| SCARABEO 500 | 500 | 03 | | FD074 | G1054 | 2 | DF671 | W | FLW | | FD228 | G1054 | | | | |
| SCARABEO 500 ABS++ | 500 | 03 | | FD074 | G1054 | 2 | DF671 | W | FLW | | FD228 | G1054 | DF612 | W | | |
| SXV 550 | 550 | 06 | | | | 1 | DF826 | CW | CRW | | FD286 | G1396 | DF827 | W | | |
| PEGASO 600 4 VALVOLE | 600 | 91 | | FD128 | G1054 | 1 | DF663 | FLW | | | FD075 | G1054 | DF632 | W | | |
| PEGASO 600 AE | 600 | 91 | | FD133 | G1054 | 1 | DF663 | FLW | | | FD135 | G1054 | DF632 | W | | |
| TUAREG 600 WIND AE | 600 | 91 | | FD089 | G1054 | 1 | | | | | FD135 | G1054 | | | | |
| MOTO 6.5 | 650 | 95 | | FD172 | G1054 | 1 | | | | | FD135 | G1054 | DF632 | W | | |
| PEGASO 650 | 650 | 91 | 93 | FD132 | G1054 | 1 | DF663 | FLW | | | FD135 | G1054 | DF632 | W | | |
| PEGASO 650 | 650 | 94 | 97 | FD162 | G1054 | 1 | DF663 | FLW | | | FD171 | G1054 | DF632 | W | | |
| PEGASO 650 | 650 | 98 | 00 | FD172 | G1054 | 1 | DF663 | FLW | | | FD075 | G1054 | DF632 | W | | |
| PEGASO 650 ie | 650 | 01 | 06 | FD172 | G1054 | 1 | DF663 | FLW | | | FD165 | G1054 | DF703 | W | | |
| PEGASO 650 ie | 650 | 07 | | FD176 | G1054 | 1 | DF660 | CW | CRW | | FD165 | G1054 | DF703 | W | | |
| PEGASO 650 ie FACTORY | 650 | 06 | 08 | | | 1 | DF660 | CW | CRW | | FD165 | G1396 | DF703 | W | | |
| PEGASO 650 STRADA | 650 | 05 | | FD176 | G1054 | 1 | DF660 | CW | CRW | | FD165 | G1054 | DF703 | W | | |
| DORSODURO | 750 | 08 | | FD367 | G1375 | 2 | DF660 | CW | CRW | | FD165 | G1371 | | | | |
| DORSODURO FACTORY | 750 | 10 | | FD367 | G1375 | 2 | DF660 | CW | CRW | | FD165 | G1371 | | | | |
| SHIVER | 750 | 07 | | FD367 | G1054 | 2 | DF660 | CW | CRW | | FD165 | G1054 | | | | |
| SHIVER SL GT / ABS | 750 | 09 | | FD367 | G1054 | 2 | DF660 | CW | CRW | | FD165 | G1054 | | | | |
| MANA | 850 | 07 | | FD367 | G1054 | 2 | DF660 | CW | CRW | | FD165 | G1054 | | | | |
| MANA GT / ABS | 850 | 09 | | FD367 | G1054 | 2 | DF660 | CW | CRW | | FD165 | G1054 | | | | |
| MANA X / ABS | 850 | 10 | | FD367 | G1054 | 2 | DF660 | CW | CRW | | FD195 | G1054 | | | | |
| SRV 850 | 850 | 12 | | FD138 | G1380 | 2 | | | | | FD277 | G1380 | | | | |
| BLUE MARLIN | 1000 | 02 | | FD176 | G1054 | 2 | DF660 | CW | CRW | | FD220 | G1054 | DF669 | W | | |
| CAPONORD RAID | 1000 | 03 | | FD172 | G1054 | 2 | | | | | FD186 | G1371 | | | | |
| ETV CAPONORD | 1000 | 01 | | FD172 | G1054 | 2 | | | | | FD220 | G1371 | | | | |
| PEGASO 1000 | 1000 | 01 | | FD172 | G1054 | 2 | | | | | FD165 | G1371 | | | | |
| RST FUTURA | 1000 | 01 | | FD176 | G1054 | 2 | DF472 | CW | | | FD138 | G1054 | | | | |
| RSV4 FACTORY | 1000 | 09 | | FD373 | G1375 | 2 | DF883 | CW | | | FD220 | G1371 | DF669 | W | | |
| RSV4 R | 1000 | 09 | 14 | FD373 | G1375 | 2 | DF883 | CW | | | FD220 | G1371 | DF669 | W | | |
| RSV4 RR | 1000 | 15 | | FD373 | G1375 | 2 | DF883 | CW | | | FD220 | G1371 | DF669 | W | | |
| RSV MILLE | 1000 | 98 | 00 | FD176 | G1054 | 2 | DF660 | CW | CRW | | FD220 | G1054 | DF669 | W | | |

| BRAND & MODEL • MARCA Y MODELO<br>MARCA E MODELLO • MARQUE ET MODÉLE | C.C. | YEAR | | FRONT FD MF | FRONT COMPOUND RECOMMENDED | FRONT N° | FRONT DF | FRONT OE | FRONT UPGRADE 1 | FRONT UPGRADE 2 | REAR FD MF | REAR COMPOUND RECOMMENDED | REAR DF | REAR OE | REAR UPGRADE | KITS KG |
|---|---|---|---|---|---|---|---|---|---|---|---|---|---|---|---|---|
| RSV MILLE | 1000 | 01 | | FD262 | G1054 | 2 | DF883 | CW | | | FD220 | G1054 | DF669 | W | | |
| RSV MILLE R | 1000 | 00 | 00 | FD176 | G1054 | 2 | DF660 | CW | CRW | | FD220 | G1054 | DF669 | W | | |
| RSV MILLE R | 1000 | 01 | | FD262 | G1054 | 2 | DF883 | CW | | | FD220 | G1054 | DF669 | W | | |
| RSV MILLE SP | 1000 | 00 | | FD176 | G1054 | 2 | DF660 | CW | CRW | | FD220 | G1054 | DF669 | W | | |
| RSV TUONO | 1000 | 02 | 05 | FD176 | G1054 | 2 | DF660 | CW | CRW | | FD220 | G1371 | DF669 | W | | |
| RSV TUONO R | 1000 | 02 | | FD262 | G1054 | 2 | DF883 | CW | | | FD220 | G1371 | DF669 | W | | |
| RSV TUONO V4 R | 1000 | 11 | | FD176 | G1375 | 2 | DF883 | CW | | | FD220 | G1371 | DF669 | W | | |
| RSV R FACTORY | 1000 | 04 | | FD262 | G1054 | 2 | DF883 | CW | | | FD220 | G1054 | DF669 | W | | |
| SL 1000 FALCO | 1000 | 00 | | FD176 | G1054 | 2 | DF660 | CW | CRW | | FD220 | G1371 | DF669 | W | | |
| RSV TUONO V4 R | 1100 | 15 | | FD475 | G1375 | 2 | DF883 | CW | | | FD220 | G1371 | DF669 | W | | |
| CAPONORD 1200 | 1200 | 13 | | FD475 | G1370 | 2 | DF883 | CW | | | FD165 | G1371 | | | | |
| DORSODURO 1200 | 1200 | 11 | | FD176 | G1375 | 2 | DF883 | CW | | | FD165 | G1371 | | | | |
| **BENELLI** | | | | | | | | | | | | | | | | |
| ADIVA | 150 | 00 | | FD153 | G1054 | 1 | DF737 | W | | | FD263 | G1054 | | | | |
| HOBBY 150 | 150 | 13 | | FD187 | G1054 | 1 | | | | | FD187 | G1054 | | | | |
| MACIS 150 | 150 | 10 | | FD187 | G1054 | 1 | | | | | FD187 | G1054 | | | | |
| UNO C 150 | 150 | 13 | | FD176 | G1054 | 1 | | | | | FD012 | G1054 | | | | |
| VELVET 150 | 150 | 98 | | FD153 | G1054 | 1 | DF669 | W | | | FD153 | G1054 | DF649 | W | | |
| CAFFE NERO IZQ. | 250 | 08 | | FD145 | G1054 | 1 | | | | | | G1054 | | | | |
| CAFFE NERO DER. | 250 | 08 | | FD187 | G1054 | 1 | | | | | FD315 | G1054 | | | | |
| UNO C 250 | 250 | 13 | | FD176 | G1054 | 1 | | | | | FD012 | G1054 | | | | |
| VELVET 250 | 250 | 99 | | FD162 | G1054 | 1 | DF669 | W | | | FD228 | G1054 | DF649 | W | | |
| BN 302 | 300 | 14 | | FD176 | G1054 | 2 | | | | | FD214 | G1054 | | | | |
| VELVET DUSK 400 | 400 | 03 | | FD162 | G1054 | 1 | | | | | FD228 | G1380 | DF649 | W | | |
| 570 SUPERMOTO | 570 | 08 | | FD262 | G1054 | 1 | DF886 | | | | FD165 | G1054 | DF632 | W | | |
| BN 600 | 600 | 13 | | FD176 | G1370 | 2 | | | | | FD220 | G1054 | | | | |
| BN 600 GT | 600 | 15 | | FD475 | G1054 | 2 | | | | | FD220 | G1054 | | | | |
| BN 600 R | 600 | 14 | | FD475 | G1054 | 2 | | | | | FD220 | G1054 | | | | |
| 756 | 750 | 10 | | FD176 | G1054 | 2 | | | | | FD220 | G1054 | | | | |
| DUE | 750 | 07 | | FD262 | G1370 | 2 | | | | | FD220 | G1054 | | | | |
| CENTURY RACER 899 | 900 | 11 | | FD262 | G1370 | 2 | DF660 | CW | CRW | | FD220 | G1054 | DF703 | W | | |
| TNT 899 S/T | 900 | 08 | 10 | FD176 | G1370 | 2 | DF660 | CW | CRW | | FD220 | G1054 | | | | |
| TNT 899 | 900 | 11 | | FD262 | G1370 | 2 | DF660 | CW | CRW | | FD220 | G1054 | | | | |
| TORNADO TRE 900 LM | 900 | 03 | | FD262 | G1054 | 2 | DF660 | CW | CRW | | FD220 | G1054 | | | | |
| TRE-K 899 | 900 | 09 | | FD176 | G1370 | 2 | DF660 | CW | CRW | | FD220 | G1054 | DF703 | W | | |
| SPORT TORNADO NAKED TRE | 1130 | 06 | | FD262 | G1054 | 2 | DF881 | CW | FLW | CRW | FD220 | G1054 | DF736 | W | | |
| TNT 1130 | 1130 | 04 | | FD176 | G1054 | 2 | DF660 | CW | CRW | | FD220 | G1054 | DF703 | W | | |
| TNT CAFÉ RACER | 1130 | 06 | | FD262 | G1054 | 2 | DF660 | CW | CRW | | FD220 | G1054 | DF703 | W | | |
| TNT R 160 | 1130 | 10 | | FD262 | G1370 | 2 | DF660 | CW | CRW | | FD220 | G1054 | DF703 | W | | |
| TNT TITANIUM | 1130 | 06 | | FD262 | G1054 | 2 | DF660 | CW | CRW | | FD220 | G1054 | DF703 | W | | |
| TREK AMAZONAS | 1130 | 07 | | FD176 | G1370 | 2 | DF881 | CW | FLW | CRW | FD220 | G1371 | DF736 | W | | |
| TORNADO TRE 1130 | 1130 | 06 | | FD262 | G1054 | 2 | DF881 | CW | FLW | CRW | FD220 | G1054 | DF736 | W | | |
| **BETA** | | | | | | | | | | | | | | | | |
| EIKON 150 4T | 150 | 99 | | FD153 | G1054 | 1 | | | | | FD228 | G1054 | | | | |
| URBAN 200 | 200 | 08 | | FD162 | G1054 | 1 | | | | | FD456 | G1054 | | | | |
| ALP 4.0 | 350 | 03 | 07 | FD162 | G1054 | 1 | DF677 | W | FLW | FLS | FD075 | G1054 | DF678 | WLL | WS | |
| ALP 4.0 | 350 | 08 | | FD162 | G1054 | 1 | | | | | FD456 | G1054 | | | | |
| EURO | 350 | 00 | | FD068 | G1054 | 1 | | | | | FD165 | G1054 | | | | |
| JONATHAN | 350 | 03 | | FD068 | G1054 | 1 | | | | | FD165 | G1054 | | | | |
| **BIMOTA** | | | | | | | | | | | | | | | | |
| V-DUE 500 | 500 | 98 | | FD068 | G1054 | 2 | DF660 | CW | CRW | | FD012 | G1054 | | | | |
| V-DUE 500 EVOLUZIONE | 500 | 00 | | FD176 | G1054 | 2 | DF660 | CW | CRW | | FD012 | G1054 | | | | |
| BELLARIA | 600 | 90 | | FD068 | G1054 | 2 | | | | | FD012 | G1054 | | | | |
| YB9 SUPERSPORT 600 | 600 | 93 | | FD068 | G1054 | 2 | DF660 | CW | CRW | | FD012 | G1054 | | | | |
| BB1 SUPERMONO | 650 | 95 | | FD068 | G1054 | 1 | DF660 | CW | CRW | | FD012 | G1054 | | | | |
| SB 6 750 | 750 | 94 | | FD068 | G1054 | 2 | | | | | FD012 | G1054 | | | | |
| TESI 1D 851 | 851 | 90 | 91 | FD068 | G1054 | 2 | DF660 | CW | CRW | | FD012 | G1054 | | | | |
| MANTRA 900 | 900 | 95 | | FD068 | G1054 | 2 | DF660 | CW | CRW | | FD012 | G1054 | | | | |
| DB4 | 900 | 98 | 99 | FD176 | G1054 | 2 | DF660 | CW | CRW | | FD012 | G1054 | | | | |
| DB5 MILLE | 992 | 05 | | FD262 | G1375 | 2 | DF883 | CW | | | FD220 | G1371 | | | | |
| DB2 H.F, SR, INJECTION | 904 | 93 | | FD068 | G1054 | 2 | DF660 | CW | CRW | | FD012 | G1054 | | | | |
| TESI 1D 906 SR, ES, EF | 904 | 93 | | FD068 | G1054 | 2 | | | | | FD012 | G1054 | | | | |
| DB 5 R / S | 990 | 10 | | FD262 | G1375 | 2 | | | | | FD220 | G1371 | | | | |
| DB 6 / R | 990 | 10 | | FD262 | G1375 | 2 | | | | | FD220 | G1371 | | | | |
| TESI 2D | 992 | 06 | | FD068 | G1375 | 2 | | | | | FD012 | G1371 | | | | |
| SB8 K SANTAMONICA | 996 | 06 | | FD262 | G1375 | 2 | DF883 | CW | | | FD012 | G1371 | | | | |
| SB8 R SPECIAL | 996 | 97 | | FD068 | G1054 | 2 | DF660 | CW | CRW | | FD012 | G1054 | | | | |
| BB3 | 1000 | 14 | | FD373 | G1375 | 2 | | | | | FD392 | G1371 | | | | |
| DELIRIO | 1000 | 07 | | FD262 | G1375 | 2 | | | | | FD220 | G1371 | | | | |
| DIECI | 1000 | 91 | | FD068 | G1054 | 2 | | | | | FD012 | G1054 | | | | |
| DIECI BIPOSTO | 1000 | 92 | 95 | FD068 | G1054 | 2 | DF660 | CW | CRW | | FD012 | G1054 | | | | |
| TESI 2D | 1000 | 05 | | FD068 | G1054 | 2 | | | | | FD012 | G1054 | | | | |
| TESI 3D | 1000 | 07 | | FD262 | G1375 | 2 | | | | | FD220 | G1371 | | | | |



**OE:** Original equipment (original replacement disc) • **OE:** Equipo original (disco de remplazo del original) For other models years previous to 1990 visit **www.galferonline.es** • Para otros modelos anteriores al año 1990 visitar **www.galferonline.es**
For consult TÜV (ABE) type approvals visit **www.galfermoto.com --> DOWNALOAD --> TÜV CERTIFICATIONS** • Para consultar las homologaciones TÜV (ABE) visitar **www.galfermoto.com --> DESCARGAS --> CERTIFICACIONES TÜV**

| BRAND & MODEL • MARCA Y MODELO<br>MARCA E MODELLO • MARQUE ET MODÉLE | C.C. | YEAR | | FRONT FD MF | FRONT COMPOUND RECOMMENDED | FRONT N° | FRONT DF | FRONT OE | FRONT UPGRADE 1 | FRONT UPGRADE 2 | REAR FD MF | REAR COMPOUND RECOMMENDED | REAR DF | REAR OE | REAR UPGRADE | KITS KG |
|---|---|---|---|---|---|---|---|---|---|---|---|---|---|---|---|---|
| YB10 BIPOSTO | 1000 | 93 | | FD068 | G1054 | 2 | | | | | FD012 | G1054 | | | | |
| YB8 | 1000 | 90 | | FD068 | G1054 | 2 | | | | | FD012 | G1054 | | | | |
| YB8 EVOLUTION | 1000 | 93 | | FD068 | G1054 | 2 | | | | | FD012 | G1054 | | | | |
| YB8 EXUP | 1000 | 91 | | FD068 | G1054 | 2 | | | | | FD012 | G1054 | | | | |
| YB8 FURANO 1000 | 1000 | 92 | | FD068 | G1054 | 2 | | | | | FD012 | G1054 | | | | |
| DB 6 RE / E | 1100 | 12 | | FD262 | G1375 | 2 | | | | | FD220 | G1371 | | | | |
| DB 7 | 1100 | 08 | 08 | FD262 | G1375 | 2 | DF660 | CW | CRW | | FD220 | G1371 | | | | |
| DB 7 | 1100 | 09 | | FD373 | G1375 | 2 | | | | | FD220 | G1371 | | | | |
| DB 10 | 1100 | 12 | | FD262 | G1370 | 2 | | | | | FD220 | G1054 | | | | |
| DBx | 1100 | 13 | | FD172 | G1370 | 2 | | | | | FD172 | G1370 | | | | |
| SB6 | 1100 | 98 | | FD068 | G1054 | 2 | DF660 | CW | CRW | | FD012 | G1054 | | | | |
| SB7 1100 | 1100 | 94 | | FD068 | G1054 | 2 | | | | | FD012 | G1054 | | | | |
| TESI 3D | 1100 | 08 | | FD262 | G1375 | 2 | | | | | FD220 | G1371 | | | | |
| TUATARA 1100 | 1100 | 90 | | FD068 | G1054 | 2 | | | | | FD012 | G1054 | | | | |
| DB 8 | 1198 | 10 | | FD373 | G1375 | 2 | | | | | FD220 | G1371 | | | | |
| DB 8 SP | 1198 | 13 | | FD373 | G1375 | 2 | | | | | FD220 | G1371 | | | | |
| DB 11 / VLX | 1198 | 13 | | FD373 | G1375 | 2 | | | | | FD220 | G1371 | | | | |
| DB 12 B.TOURIST | 1198 | 13 | | FD262 | G1375 | 2 | | | | | FD220 | G1371 | | | | |
| **BMW** | | | | | | | | | | | | | | | | |
| C1 200 | 200 | 01 | | FD172 | G1054 | 1 | | | | | FD165 | G1054 | | | | |
| C 600 SPORT | 600 | 12 | | FD266 | G1380 | 1 | DF816 | W | FLW | | FD266 | G1380 | DF816 | W | FLW | KG816 |
| C 650 GT | 650 | 12 | | FD266 | G1380 | 1 | DF816 | W | FLW | | FD266 | G1380 | DF816 | W | FLW | KG816 |
| F 650 | 650 | 93 | | FD172 | G1054 | 1 | DF663 | FLW | | | FD165 | G1054 | DF703 | W | | |
| F 650 CS SCARVER | 650 | 01 | | FD172 | G1054 | 1 | DF663 | FLW | | | FD165 | G1054 | DF703 | W | | |
| F 650 DAKAR | 650 | 00 | 01 | FD172 | G1054 | 1 | DF663 | FLW | | | FD165 | G1054 | DF703 | W | | |
| F 650 GS | 650 | 00 | | FD172 | G1054 | 1 | DF663 | FLW | | | FD165 | G1054 | DF703 | W | | |
| F 650 GS BICILINDRICO | 650 | 07 | | FD172 | G1054 | 1 | DF663 | FLW | | | FD165 | G1054 | DF763 | W | | |
| F 650 ST | 650 | 97 | | FD172 | G1054 | 1 | DF663 | FLW | | | FD165 | G1054 | DF703 | W | | |
| G 650 GS | 650 | 09 | | FD172 | G1054 | 1 | DF663 | FLW | | | FD165 | G1054 | DF703 | W | | |
| G 650 XCHALLENGE | 650 | 07 | | FD172 | G1054 | 1 | DF663 | FLW | | | FD165 | G1054 | | | | |
| G 650 XCOUNTRY | 650 | 07 | | FD172 | G1054 | 1 | DF663 | FLW | | | FD165 | G1054 | DF703 | W | | |
| G 650 XMOTO | 650 | 07 | | FD176 | G1054 | 1 | DF883 | CW | | | FD165 | G1396 | DF703 | W | | |
| R 65 R | 650 | 93 | | FD044 | G1054 | 1 | | | | | MF610 | G2165 | - | | | |
| F 700 GS | 700 | 13 | | FD172 | G1054 | 2 | DF664 | CW | | | FD165 | G1054 | DF763 | W | | |
| K 75 | 750 | 93 | | FD013 | G1054 | 2 | DF662 | W | | | FD013 | G1054 | DF662 | W | | |
| K 75 RT, S | 750 | 93 | | FD013 | G1054 | 2 | DF662 | W | | | FD044 | G1054 | DF662 | W | | |
| F 800 GS | 800 | 08 | | FD172 | G1370 | 2 | DF664 | CW | | | FD165 | G1371 | DF763 | W | | |
| F 800 GT | 800 | 13 | | FD176 | G1370 | 2 | DF707 | W | | | FD165 | G1371 | DF763 | W | | |
| F 800 R | 800 | 09 | 14 | FD176 | G1370 | 2 | DF707 | W | | | FD165 | G1371 | DF763 | W | | |
| F 800 R | 800 | 15 | | FD475 | G1370 | 2 | DF707 | W | | | FD165 | G1371 | DF763 | W | | |
| F 800 S | 800 | 06 | | FD176 | G1054 | 2 | DF707 | W | | | FD165 | G1054 | DF763 | W | | |
| F 800 ST | 800 | 06 | | FD176 | G1054 | 2 | DF707 | W | | | FD165 | G1054 | DF763 | W | | |
| R 80 GS | 800 | 93 | | FD044 | G1054 | 1 | DF662 | W | | | MF610 | G2165 | - | | | |
| R 80 R | 800 | 94 | | FD198 | G1054 | 2 | | | | | MF616 | G2165 | - | | | |
| R 80 R ROADSTER | 800 | 93 | | FD198 | G1054 | 2 | | | | | MF | | - | | | |
| R 80 RT | 800 | 93 | | FD044 | G1054 | 2 | DF662 | W | | | MF | | - | | | |
| RT 80 RT | 800 | 91 | | FD044 | G1054 | 1 | | | | | MF | | - | | | |
| R 850 R | 850 | 04 | | FD272 | G1054 | 2 | DF707 | W | | | FD186 | G1054 | DF701 | W | | |
| R 850 R ROADSTER | 850 | 95 | 00 | FD198 | G1054 | 2 | DF631 | CW | | | FD186 | G1054 | DF701 | W | | |
| R 850 R ROADSTER | 850 | 01 | | FD271 | G1054 | 2 | DF631 | CW | | | FD186 | G1054 | DF701 | W | | |
| R 850 RT | 850 | 06 | | FD271 | G1054 | 2 | DF707 | W | | | FD186 | G1054 | DF701 | W | | |
| HP 4 | 1000 | 12 | | FD373 | G1375 | 2 | DF817 | CW | | | FD165 | G1371 | DF756 | W | | |
| R 100 GS, PD, RT | 1000 | 93 | 94 | FD044 | G1054 | 1 | DF662 | W | | | MF610 | G2165 | - | | | |
| R 100 GS, R | 1000 | 93 | 94 | FD198 | G1054 | 2 | DF631 | CW | | | FD013 | G1054 | DF662 | W | | |
| R 100 GS/ABS, R, RS | 1000 | 95 | | FD198 | G1054 | 2 | DF702 | W | | | FD186 | G1054 | DF701 | W | | |
| R 100 R | 1000 | 92 | 94 | FD137 | G1054 | 2 | | | | | MF616 | G2165 | - | | | |
| R 100 R CLASSIC, MYSTIC | 1000 | 95 | | FD198 | G1054 | 2 | | | | | FD186 | G1054 | DF701 | W | | |
| R 100 ROADSTER | 1000 | 93 | | FD198 | G1054 | 2 | | | | | MF616 | G2165 | - | | | |
| S 1000 R NAKED | 1000 | 14 | | FD437 | G1375 | 2 | DF755 | CW | | | FD165 | G1371 | DF756 | W | | |
| S 1000 RR | 1000 | 09 | 14 | FD437 | G1375 | 2 | DF755 | CW | | | FD165 | G1371 | DF756 | W | | |
| S 1000 RR ABS | 1000 | 09 | 14 | FD437 | G1375 | 2 | DF755 | CW | | | FD165 | G1371 | DF756 | W | | |
| S 1000 RR | 1000 | 15 | | FD475 | G1375 | 2 | DF755 | CW | | | FD165 | G1371 | DF756 | W | | |
| S 1000 RR ABS | 1000 | 15 | | FD475 | G1375 | 2 | DF755 | CW | | | FD165 | G1371 | DF756 | W | | |
| S 1000 RX | 1000 | 15 | | FD475 | G1370 | 2 | DF755 | CW | | | FD172 | G1371 | DF763 | W | | |
| K 1100 RS ABS | 1100 | 93 | | FD198 | G1054 | 2 | DF631 | CW | | | FD013 | G1054 | DF662 | W | | |
| K 1100 LT SPECIAL EDITION | 1100 | 95 | | FD198 | G1054 | 2 | DF631 | CW | | | FD044 | G1054 | DF662 | W | | |
| K 1100 LT (ABS) | 1100 | 93 | 94 | FD198 | G1054 | 2 | DF631 | CW | | | FD013 | G1054 | DF662 | W | | |
| R 1100 GS ABS | 1100 | 94 | | FD198 | G1054 | 2 | DF702 | W | | | FD186 | G1054 | DF701 | W | | |
| R 1100 GS NO ABS | 1100 | 94 | | FD198 | G1054 | 2 | DF702 | W | | | FD186 | G1054 | DF701 | W | | |
| R 1100 LT | 1100 | 95 | | FD198 | G1054 | 2 | DF631 | CW | | | FD013 | G1054 | DF662 | W | | |
| R 1100 R ROADSTER | 1100 | 95 | | FD198 | G1054 | 2 | DF631 | CW | | | FD186 | G1054 | DF701 | W | | |
| R 1100 RS | 1100 | 93 | 94 | FD198 | G1054 | 2 | DF631 | CW | | | FD013 | G1054 | DF662 | W | | |
| R 1100 RS NO ABS | 1100 | 95 | | FD198 | G1054 | 2 | DF631 | CW | | | FD186 | G1054 | DF701 | W | | |

| BRAND & MODEL • MARCA Y MODELO<br>MARCA E MODELLO • MARQUE ET MODÉLE | C.C. | YEAR | | FRONT FD MF | FRONT COMPOUND RECOMMENDED | FRONT N° | FRONT DF | FRONT OE | FRONT UPGRADE 1 | FRONT UPGRADE 2 | REAR FD MF | REAR COMPOUND RECOMMENDED | REAR DF | REAR OE | REAR UPGRADE | KITS KG |
|---|---|---|---|---|---|---|---|---|---|---|---|---|---|---|---|---|
| R 1100 RT ABS | 1100 | 94 | 01 | FD198 | G1054 | 2 | DF631 | CW | | | FD186 | G1054 | DF701 | W | | |
| R 1100 RT NO ABS | 1100 | 94 | 01 | FD198 | G1054 | 2 | DF631 | CW | | | FD186 | G1054 | DF701 | W | | |
| R 1100 S NO ABS | 1100 | 98 | 00 | FD198 | G1054 | 2 | DF702 | W | | | FD186 | G1054 | DF701 | W | | |
| R 1100 S | 1100 | 01 | | FD271 | G1054 | 2 | DF707 | W | | | FD186 | G1054 | DF701 | W | | |
| R 1100 S ABS | 1100 | 01 | | FD272 | G1054 | 2 | DF707 | W | | | FD186 | G1054 | DF701 | W | | |
| HP 2 ENDURO | 1150 | 05 | | FD172 | G1370 | 1 | DF702 | W | | | FD186 | G1371 | DF763 | W | | |
| HP 2 SM | 1150 | 06 | 06 | FD172 | G1370 | 1 | DF707 | W | | | FD186 | G1371 | DF763 | W | | |
| HP 2 SPORT | 1150 | 08 | | FD373 | G1375 | 2 | DF707 | W | | | FD186 | G1371 | DF763 | W | | |
| HP 2 MEGAMOTO | 1150 | 07 | | FD271 | G1370 | 2 | DF707 | W | | | FD186 | G1371 | DF763 | W | | |
| R 1150 GS ABS | 1150 | 00 | 01 | FD198 | G1054 | 2 | DF702 | W | | | FD186 | G1371 | DF701 | W | | |
| R 1150 GS | 1150 | 02 | | FD271 | G1054 | 2 | DF702 | W | | | FD186 | G1371 | DF701 | W | | KG702 |
| R 1150 GS ADVENTURE | 1150 | 03 | | FD272 | G1054 | 2 | DF707 | W | | | FD186 | G1371 | DF701 | W | | |
| R 1150 R ROCKESTER | 1150 | 03 | | FD272 | G1054 | 2 | DF707 | W | | | FD186 | G1371 | DF701 | W | | |
| R 1150 R ROADSTER | 1150 | 01 | | FD272 | G1054 | 2 | DF707 | W | | | FD186 | G1371 | DF701 | W | | |
| R 1150 RS | 1150 | 01 | | FD272 | G1054 | 2 | DF707 | W | | | FD186 | G1371 | DF701 | W | | |
| R 1150 RT | 1150 | 01 | | FD271 | G1054 | 2 | DF707 | W | | | FD186 | G1371 | DF701 | W | | |
| K 1200 GT | 1200 | 02 | 05 | FD271 | G1054 | 2 | DF707 | W | | | FD251 | G1054 | DF701 | W | | |
| K 1200 GT DER/RIGHT | 1200 | 06 | | FD377 | G1370 | 2 | DF707 | W | | | FD374 | G1371 | | | | |
| K 1200 GT IZQ/LEFT | 1200 | 06 | | FD271 | G1370 | 2 | DF707 | W | | | | G1371 | | | | |
| K 1200 LT | 1200 | 97 | 00 | FD198 | G1054 | 2 | DF702 | W | | | FD251 | G1054 | | | | |
| K 1200 LT | 1200 | 01 | 08 | FD272 | G1370 | 2 | DF707 | W | | | FD251 | G1054 | | | | |
| K 1200 LT | 1200 | 09 | | FD272 | G1370 | 2 | DF707 | W | | | FD251 | G1054 | | | | |
| K 1200 RS ABS | 1200 | 97 | 00 | FD198 | G1054 | 2 | DF702 | W | | | FD186 | G1371 | DF701 | W | | |
| K 1200 RS | 1200 | 01 | | FD272 | G1054 | 2 | DF707 | W | | | FD044 | G1054 | DF701 | W | | |
| K 1200 R | 1200 | 05 | | FD272 | G1370 | 2 | DF707 | W | | | FD186 | G1371 | DF763 | W | | |
| K 1200 R SPORT | 1200 | 07 | | FD272 | G1370 | 2 | DF707 | W | | | FD186 | G1371 | DF763 | W | | |
| K 1200 RT | 1200 | 06 | | FD271 | G1370 | 2 | DF707 | W | | | FD186 | G1371 | DF701 | W | | |
| K 1200 S | 1200 | 04 | | FD271 | G1054 | 2 | DF707 | W | | | FD186 | G1371 | DF763 | W | | |
| K 1200 ST | 1200 | 06 | 08 | FD271 | G1370 | 2 | DF707 | W | | | FD186 | G1371 | | | | |
| K 1200 ST | 1200 | 09 | | FD271 | G1370 | 2 | DF707 | W | | | FD186 | G1371 | | | | |
| R 1200 CRUISER | 1200 | 97 | | FD198 | G1054 | 2 | DF702 | W | | | FD186 | G1054 | DF701 | W | | |
| R 1200 C AVANTGARDE | 1200 | 00 | | FD198 | G1054 | 2 | DF702 | W | | | FD186 | G1054 | DF701 | W | | |
| R 1200 C INDEPENDENT | 1200 | 01 | | FD198 | G1054 | 2 | DF702 | W | | | FD186 | G1054 | DF701 | W | | |
| R 1200 C MONTAUK | 1200 | 04 | | FD272 | G1054 | 2 | DF702 | W | | | FD186 | G1054 | | | | |
| R 1200 GS | 1200 | 04 | 08 | FD271 | G1054 | 2 | DF702 | W | | | FD186 | G1054 | DF763 | W | | KG702 |
| R 1200 GS | 1200 | 09 | | FD271 | G1370 | 2 | DF702 | W | | | FD186 | G1371 | DF763 | W | | KG702 |
| R 1200 GS LC | 1200 | 13 | | FD475 | G1370 | 2 | DF702 | W | | | FD172 | G1370 | DF720 | W | | |
| R 1200 GS ADVENTURE | 1200 | 06 | 08 | FD271 | G1054 | 2 | DF702 | W | | | FD186 | G1054 | DF763 | W | | KG702 |
| R 1200 GS ADVENTURE | 1200 | 09 | | FD271 | G1370 | 2 | DF702 | W | | | FD186 | G1371 | DF763 | W | | KG702 |
| R 1200 GS LC ADVENTURE | 1200 | 13 | | FD475 | G1370 | 2 | DF702 | W | | | FD172 | G1370 | DF720 | W | | |
| R 1200 R | 1200 | 06 | 08 | FD272 | G1054 | 2 | DF707 | W | | | FD186 | G1054 | DF763 | W | | |
| R 1200 R | 1200 | 09 | 14 | FD272 | G1370 | 2 | DF707 | W | | | FD186 | G1371 | DF763 | W | | |
| R 1200 R | 1200 | 15 | | FD475 | G1370 | 2 | DF707 | W | | | FD186 | G1371 | DF763 | W | | |
| R 1200 R NINE T | 1200 | 14 | | FD475 | G1370 | 2 | DF707 | W | | | FD186 | G1371 | DF763 | W | | |
| R 1200 RT | 1200 | 05 | | FD271 | G1370 | 2 | DF707 | W | | | FD186 | G1371 | DF763 | W | | |
| R 1200 RT SE | 1200 | 10 | | FD271 | G1370 | 2 | DF707 | W | | | FD186 | G1371 | DF763 | W | | |
| R 1200 RT LC | 1200 | 14 | | FD475 | G1370 | 2 | DF707 | W | | | FD172 | G1370 | DF720 | W | | |
| R 1200 RS | 1200 | 15 | | FD475 | G1370 | 2 | DF707 | W | | | FD172 | G1370 | DF720 | W | | |
| R 1200 S | 1200 | 06 | 08 | FD271 | G1370 | 2 | DF707 | W | | | FD186 | G1371 | DF763 | W | | |
| R 1200 S | 1200 | 09 | | FD271 | G1370 | 2 | DF707 | W | | | FD186 | G1371 | DF763 | W | | |
| R 1200 ST | 1200 | 05 | 08 | FD271 | G1370 | 2 | DF707 | W | | | FD186 | G1371 | DF763 | W | | |
| R 1200 ST | 1200 | 09 | | FD271 | G1370 | 2 | DF707 | W | | | FD186 | G1371 | DF763 | W | | |
| K 1300 GT | 1300 | 09 | | FD271 | G1370 | 2 | DF707 | W | | | FD186 | G1371 | DF763 | W | | |
| K 1300 R | 1300 | 09 | | FD272 | G1370 | 2 | DF707 | W | | | FD186 | G1371 | DF763 | W | | |
| K 1300 S | 1300 | 09 | | FD271 | G1370 | 2 | DF707 | W | | | FD186 | G1371 | DF763 | W | | |
| K 1300 S MOTOR SPORT | 1300 | 15 | | FD475 | G1370 | 2 | DF707 | W | | | FD186 | G1371 | DF763 | W | | |
| K 1600 GT | 1600 | 11 | | FD272 | G1370 | 2 | DF707 | W | | | FD172 | G1370 | | | | |
| K 1600 GT SE | 1600 | 12 | | FD272 | G1370 | 2 | DF707 | W | | | FD172 | G1370 | | | | |
| K 1600 GTL | 1600 | 11 | | FD272 | G1370 | 2 | DF707 | W | | | FD172 | G1370 | | | | |
| K 1600 GTL E | 1600 | 12 | | FD272 | G1370 | 2 | DF707 | W | | | FD172 | G1370 | | | | |
| **BORILE** | | | | | | | | | | | | | | | | |
| B 500 CR | 500 | 02 | | FD068 | G1054 | 1 | | | | | FD165 | G1054 | | | | |
| B 500 MT | 500 | 02 | | FD068 | G1054 | 1 | | | | | FD165 | G1054 | | | | |
| **BREMBO CUSTOM** | | | | | | | | | | | | | | | | |
| 120B814** | | | | FD262 | G1003 | | | | | | | | | | | |
| **BREMBO RACING** | | | | | | | | | | | | | | | | |
| 120B765** | | | | FD068 | G1003 | | | | | | | | | | | |
| 129B766** | | | | FD068 | G1003 | | | | | | | | | | | |
| 2209885** | | | | FD373 | G1003 | | | | | | | | | | | |
| 220A016** | | | | FD176 | G1003 | | | | | | | | | | | |
| 220A168** | | | | FD176 | G1003 | | | | | | | | | | | |
| 220A397** | | | | FD373 | G1003 | | | | | | | | | | | |
| 220B010** | | | | FD373 | G1003 | | | | | | | | | | | |



**OE:** Original equipment (original replacement disc) • **OE:** Equipo original (disco de remplazo del original) For other models years previous to 1990 visit **www.galferonline.es** • Para otros modelos anteriores al año 1990 visitar **www.galferonline.es**
For consult TÜV (ABE) type approvals visit **www.galfermoto.com --> DOWNLOAD --> TÜV CERTIFICATIONS** • Para consultar las homologaciones TÜV (ABE) visitar **www.galfermoto.com --> DESCARGAS --> CERTIFICACIONES TÜV**

| BRAND & MODEL • MARCA Y MODELO<br>MARCA E MODELLO • MARQUE ET MODÉLE | C.C. | YEAR | | FRONT FD MF | FRONT COMPOUND RECOMMENDED | FRONT N° | FRONT DF | FRONT OE | FRONT UPGRADE 1 | FRONT UPGRADE 2 | REAR FD MF | REAR COMPOUND RECOMMENDED | REAR DF | REAR OE | REAR UPGRADE | KITS KG |
|---|---|---|---|---|---|---|---|---|---|---|---|---|---|---|---|---|
| X10117** | | | | FD208 | G1003 | | | | | | | | | | | |
| X9737** | | | | FD208 | G1003 | | | | | | | | | | | |
| X99C4** 4P | | | | FD391 | G1003 | | | | | | | | | | | |
| XA3B8** | | | | FD168 | G1003 | | | | | | | | | | | |
| XA7G2** | | | | FD208 | G1003 | | | | | | | | | | | |
| XA888** (MOTO3) | | | | FD391 | G1003 | | | | | | | | | | | |
| XA933** | | | | FD208 | G1003 | | | | | | | | | | | |
| 120A44110 | | | | | | | | | | | FD220 | G1371 | | | | |
| 120B27810 | | | | | | | | | | | FD220 | G1371 | | | | |
| X206001 | | | | | | | | | | | FD181 | G1054 | | | | |
| X206101 | | | | | | | | | | | FD392 | G1371 | | | | |
| X206121 | | | | | | | | | | | FD392 | G1371 | | | | |
| X988870 | | | | | | | | | | | FD392 | G1371 | | | | |
| XA1J040 | | | | | | | | | | | FD392 | G1371 | | | | |
| **BUELL** | | | | | | | | | | | | | | | | |
| BLAST | 500 | 00 | | FD140 | G1054 | 1 | | | | | FD103 | G1054 | | | | |
| XB 9 R FIREBOLT F | 984 | 02 | | FD402 | G1370 | 1 | DF820 | W | | | FD103 | G1371 | | | | |
| XB 9 S LIGHTNING F | 984 | 03 | | FD402 | G1370 | 1 | DF820 | W | | | FD103 | G1371 | | | | |
| XB 9 SX CITYX | 984 | 06 | | FD402 | G1370 | 1 | DF820 | W | | | FD103 | G1371 | | | | |
| 1125 CR | 1125 | 09 | | | | 1 | | | | | FD398 | G1371 | | | | |
| 1125 R | 1125 | 08 | | | | 1 | | | | | FD398 | G1371 | | | | |
| M2 CYCLONE | 1200 | 00 | | FD384 | G1054 | 1 | DF882 | CW | | | FD103 | G1054 | DF884 | W | | |
| S3 THUNDERBOLT | 1200 | 00 | | FD384 | G1054 | 1 | DF882 | CW | | | FD103 | G1054 | DF884 | W | | |
| SPECIAL M2 CYCLONE | 1200 | 00 | | FD226 | G1054 | 1 | DF882 | CW | | | FD103 | G1054 | DF884 | W | | |
| X1 LIGHTNING | 1200 | 00 | | FD384 | G1054 | 1 | DF882 | CW | | | FD103 | G1054 | DF884 | W | | |
| XB 12 R FIREBOLT | 1200 | 06 | | FD402 | G1370 | 1 | DF820 | W | | | FD103 | G1371 | | | | |
| XB 12 S LIGHTNING | 1200 | 06 | | FD402 | G1370 | 1 | DF820 | W | | | FD103 | G1371 | | | | |
| XB 12 SS LIGHTNING LONG | 1200 | 06 | | FD402 | G1370 | 1 | DF820 | W | | | FD103 | G1371 | | | | |
| XB 12 X ULYSSES | 1200 | 06 | 08 | FD402 | G1370 | 1 | DF820 | W | | | FD103 | G1371 | | | | |
| XB 12 XT ULYSSES | 1200 | 09 | | FD402 | G1370 | 1 | DF820 | W | | | FD103 | G1371 | | | | |
| **CAGIVA** | | | | | | | | | | | | | | | | |
| CANYON | 500 | 99 | | FD082 | G1054 | 1 | DF006 | W | | | FD117 | G1054 | | | | |
| MITO 500 | 500 | 07 | 07 | FD068 | G1054 | 1 | DF660 | CW | CRW | | FD012 | G1054 | | | | |
| MITO 500 | 500 | 08 | | FD262 | G1054 | 1 | DF660 | CW | CRW | | FD012 | G1054 | | | | |
| RIVER 500 | 500 | 00 | | FD068 | G1054 | 1 | DF660 | CW | CRW | | FD171 | G1054 | | | | |
| CANYON | 600 | 95 | | FD129 | G1054 | 1 | DF006 | W | | | FD117 | G1054 | | | | |
| RIVER 600 | 600 | 95 | | FD068 | G1054 | 1 | DF660 | CW | CRW | | FD012 | G1054 | | | | |
| W 16 600 | 600 | 95 | | FD089 | G1054 | 1 | | | | | FD075 | G1054 | | | | |
| V-RAPTOR | 650 | 01 | | FD176 | G1054 | 2 | DF472 | CW | | | FD220 | G1054 | | | | |
| ELEFANT 750 | 750 | 94 | | FD138 | G1054 | 1 | DF009 | W | | | FD138 | G1054 | | | | |
| CANYON | 900 | 97 | | FD172 | G1054 | 2 | DF009 | W | | | FD117 | G1054 | DF458 | W | | |
| ELEFANT 900 | 900 | 94 | | FD138 | G1054 | 2 | | | | | FD138 | G1054 | | | | |
| ELEFANT 900 CATALITICA | 900 | 93 | 93 | FD138 | G1054 | 2 | | | | | FD140 | G1054 | | | | |
| ELEFANT 900 i.e. | 900 | 91 | 92 | FD082 | G1054 | 1 | DF009 | W | | | FD145 | G1054 | DF007 | W | | |
| GRAN CANYON | 900 | 99 | | FD266 | G1054 | 2 | DF009 | W | | | FD117 | G1054 | DF007 | W | | |
| NAVIGATOR | 1000 | 00 | | FD266 | G1054 | 2 | DF009 | W | | | FD117 | G1054 | | | | |
| RAPTOR | 1000 | 00 | | FD176 | G1054 | 2 | DF472 | CW | | | FD220 | G1054 | | | | |
| V-RAPTOR | 1000 | 00 | | FD176 | G1054 | 2 | DF472 | CW | | | FD220 | G1054 | | | | |
| X-TRA RAPTOR | 1000 | 02 | | FD176 | G1054 | 2 | DF472 | CW | | | FD220 | G1054 | | | | |
| **CCM** | | | | | | | | | | | | | | | | |
| XTR 250 | 250 | 09 | | FD073 | G1054 | 1 | | | | | FD079 | G1054 | | | | |
| 404 E | 404 | 03 | | FD138 | G1054 | 1 | DF677 | W | FLW | FLS | FD165 | G1054 | DF678 | WLL | WS | |
| 404 DS | 404 | 03 | | FD138 | G1054 | 1 | DF677 | W | FLW | FLS | FD165 | G1054 | DF678 | WLL | WS | |
| 450 ADVENTURE | 450 | 15 | | FD172 | G1054 | 1 | | | | | FD165 | G1054 | DF607 | WS | | |
| 604 E DS | 604 | 98 | 03 | FD138 | G1054 | 1 | DF677 | W | FLW | FLS | FD165 | G1054 | DF678 | WLL | WS | |
| 604 E SUPER MOTARD | 604 | 98 | 03 | FD138 | G1054 | 1 | DF677 | W | FLW | FLS | FD165 | G1054 | DF678 | WLL | WS | |
| 604 RS ROADSTER | 604 | 00 | 03 | FD138 | G1054 | 1 | DF677 | W | FLW | FLS | FD165 | G1054 | DF678 | WLL | WS | |
| 644 DS | 644 | 04 | | FD138 | G1054 | 1 | DF677 | W | FLW | FLS | FD165 | G1054 | DF678 | WLL | WS | |
| 644 DS SUPER MOTARD | 644 | 04 | | FD138 | G1054 | 1 | DF677 | W | FLW | FLS | FD165 | G1054 | DF678 | WLL | WS | |
| R 30 | 644 | 02 | | FD138 | G1054 | 1 | DF677 | W | FLW | FLS | FD165 | G1054 | DF678 | WLL | WS | |
| FT 710 | 710 | 08 | | FD138 | G1054 | 1 | | | | | FD165 | G1054 | | | | |
| **CFMOTO** | | | | | | | | | | | | | | | | |
| E-CHARM | 150 | 10 | | FD187 | G1054 | 1 | | | | | FD079 | G1054 | | | | |
| GLORY | 150 | 10 | | FD187 | G1054 | 1 | | | | | FD200 | G1054 | | | | |
| JET MAX DER/RIGHT | 250 | 10 | | FD145 | G1054 | 2 | | | | | | G1054 | | | | |
| JET MAX IZQ/LEFT | 250 | 10 | | FD187 | G1054 | 2 | | | | | FD200 | G1054 | | | | |
| NK 650 | 650 | 13 | | FD266 | G1054 | 2 | | | | | FD167 | G1054 | | | | |
| **CPI** | | | | | | | | | | | | | | | | |
| GTR 150 | 150 | 03 | | FD162 | G1054 | 1 | | | | | FD153 | G1054 | | | | |
| GTS 150 | 150 | 03 | | FD162 | G1054 | 1 | | | | | FD153 | G1054 | | | | |
| X-LARGE 150 | 150 | 03 | | FD220 | G1054 | 1 | | | | | FD220 | G1054 | | | | |
| GTR 200 | 200 | 03 | | FD162 | G1054 | 1 | | | | | FD153 | G1054 | | | | |
| GTS 200 | 200 | 03 | | FD162 | G1054 | 1 | | | | | FD153 | G1054 | | | | |

| BRAND & MODEL • MARCA Y MODELO<br>MARCA E MODELLO • MARQUE ET MODÉLE | C.C. | YEAR | | FRONT FD | FRONT COMPOUND RECOMMENDED | FRONT N° | FRONT DF | FRONT OE | FRONT UPGRADE 1 | FRONT UPGRADE 2 | REAR FD | REAR COMPOUND RECOMMENDED | REAR DF | REAR OE | REAR UPGRADE | KITS KG |
|---|---|---|---|---|---|---|---|---|---|---|---|---|---|---|---|---|
| X-LARGE 250 | 250 | 03 | | FD220 | G1054 | 1 | | | | | FD220 | G1054 | | | | |
| **CSR** | | | | | | | | | | | | | | | | |
| ONA | 150 | 06 | | FD175 | G1054 | 1 | | | | | FD175 | G1054 | | | | |
| SCOO | 150 | 06 | | FD175 | G1054 | 1 | | | | | FD175 | G1054 | | | | |
| CUSTOM 250 AUTOMATICA | 250 | 06 | | FD124 | G1054 | 1 | | | | | FD127 | G1054 | | | | |
| CRUISER 250 AUTOMATICA | 250 | 06 | | FD124 | G1054 | 1 | | | | | FD127 | G1054 | | | | |
| **DAELIM** | | | | | | | | | | | | | | | | |
| ROADWIN 250 | 250 | 08 | 10 | FD140 | G1054 | 2 | | | | | FD117 | G1054 | | | | |
| ROADWIN 250 R FI | 250 | 11 | | FD140 | G1054 | 2 | | | | | FD117 | G1054 | | | | |
| S2 250 FREEWAY | 250 | 06 | | FD140 | G1054 | 1 | | | | | FD117 | G1054 | | | | |
| S3 250 Fi ADVANCE | 250 | 12 | | FD275 | G1054 | 1 | | | | | FD145 | G1054 | | | | |
| **DERBI** | | | | | | | | | | | | | | | | |
| BOULERVARD | 150 | 03 | | FD270 | G1054 | 1 | DF737 | W | | | MF | | - | | | |
| BOULERVARD | 200 | 05 | | FD270 | G1054 | 1 | DF737 | W | | | MF | | - | | | |
| GP 1 250 | 250 | 05 | 07 | FD220 | G1054 | 2 | | | | | FD220 | G1054 | DF667 | W | | |
| GP 1 250 i | 250 | 08 | | FD220 | G1054 | 2 | | | | | FD252 | G1054 | | | | |
| RAMBLA 250 ie | 250 | 08 | | FD074 | G1054 | 2 | DF671 | W | FLW | | FD228 | G1054 | DF612 | W | | |
| RAMBLA 300 ie | 300 | 10 | | FD074 | G1054 | 2 | DF671 | W | FLW | | FD228 | G1054 | DF612 | W | | |
| MULHACEN 650 | 650 | 06 | | FD262 | G1054 | 1 | | | | | FD220 | G1054 | | | | |
| **DUCATI** | | | | | | | | | | | | | | | | |
| 350 SPORT | 350 | 91 | | FD068 | G1054 | 1 | DF660 | CW | CRW | | FD012 | G1054 | DF636 | W | | |
| 400 MONSTER (JAPON) | 400 | 04 | | FD176 | G1054 | 2 | DF660 | CW | CRW | | FD220 | G1054 | DF636 | W | | |
| 400 SS | 400 | 93 | | FD068 | G1054 | 1 | DF660 | CW | CRW | | FD012 | G1054 | DF636 | W | | |
| 400 SS JUNIOR | 400 | 91 | 92 | FD044 | G1054 | 1 | | | | | FD012 | G1054 | | | | |
| 502 | 502 | 92 | | FD068 | G1054 | 1 | | | | | FD012 | G1054 | | | | |
| 600 M MONSTER | 600 | 94 | 00 | FD068 | G1054 | 1 | DF660 | CW | CRW | | FD012 | G1054 | DF636 | W | | |
| 600 SS | 600 | 93 | | FD068 | G1054 | 1 | DF660 | CW | CRW | | FD012 | G1054 | DF636 | W | | |
| 600 SUPERMONO DESMO QUATRO | 600 | 93 | | FD068 | G1054 | 1 | | | | | FD012 | G1054 | | | | |
| MONSTER 620 S i.e | 620 | 01 | 04 | FD176 | G1054 | 2 | DF660 | CW | CRW | | FD012 | G1054 | DF636 | W | | |
| MONSTER 620 / DARK | 620 | 05 | | FD138 | G1054 | 2 | DF870 | CW | | | FD220 | G1054 | DF636 | W | | |
| MULTISTRADA MTS 620 | 620 | 05 | | FD138 | G1054 | 2 | DF870 | CW | | | FD012 | G1054 | DF636 | W | | |
| MULTISTRADA MTS 620 DARK | 620 | 05 | | FD176 | G1054 | 1 | DF660 | CW | CRW | | FD012 | G1054 | DF636 | W | | |
| 620 SS | 620 | 03 | | FD176 | G1054 | 2 | DF660 | CW | CRW | | FD220 | G1054 | DF636 | W | | |
| MONSTER 695 | 695 | 06 | | FD138 | G1054 | 2 | DF870 | CW | | | FD012 | G1054 | DF636 | W | | |
| MONSTER 696 | 695 | 08 | | FD176 | G1054 | 2 | DF660 | CW | CRW | | FD012 | G1054 | DF636 | W | | |
| 748 DESMO QUATRO | 748 | 94 | 97 | FD068 | G1375 | 2 | DF660 | CW | CRW | | FD012 | G1054 | DF630 | W | | |
| 748 | 748 | 98 | 99 | FD176 | G1370 | 2 | DF660 | CW | CRW | | FD012 | G1054 | DF630 | W | | |
| 748 E/S | 748 | 00 | 02 | FD176 | G1370 | 2 | DF660 | CW | CRW | | FD012 | G1371 | DF630 | W | | |
| 748 R | 748 | 01 | 02 | FD262 | G1370 | 2 | DF660 | CW | CRW | | FD220 | G1371 | DF630 | W | | |
| 749 | 749 | 03 | | FD262 | G1370 | 2 | DF880 | CW | CRW | | FD220 | G1371 | DF706 | W | | |
| 749 S/R | 749 | 03 | | FD262 | G1370 | 2 | DF880 | CW | CRW | | FD220 | G1371 | DF706 | W | | |
| 750 M MONSTER | 750 | 96 | | FD068 | G1054 | 1 | DF660 | CW | CRW | | FD012 | G1054 | DF636 | W | | |
| 750 SPORT | 750 | 01 | | FD176 | G1054 | 1 | DF660 | CW | CRW | | FD220 | G1054 | DF636 | W | | |
| 750 SS | 750 | 91 | 97 | FD068 | G1054 | 1 | DF660 | CW | CRW | | FD012 | G1054 | DF636 | W | | |
| 750 SS | 750 | 98 | | FD176 | G1054 | 2 | DF660 | CW | CRW | | FD220 | G1054 | DF636 | W | | |
| HYPERMOTARD | 796 | 10 | | FD176 | G1375 | 2 | DF773 | CW | | | FD220 | G1054 | DF769 | W | | |
| MONSTER 796 | 796 | 10 | | FD176 | G1370 | 2 | DF807 | CW | CRW | | FD220 | G1054 | DF769 | W | | |
| MONSTER 796 ABS | 796 | 10 | | FD176 | G1370 | 2 | DF807 | CW | CRW | | FD220 | G1054 | DF769 | W | | |
| MONSTER 800 S i.e | 800 | 03 | 04 | FD176 | G1054 | 2 | DF660 | CW | CRW | | FD220 | G1054 | DF636 | W | | |
| 800 SS | 800 | 03 | | FD176 | G1054 | 2 | DF660 | CW | CRW | | FD220 | G1054 | DF636 | W | | |
| 800 SPORT | 800 | 03 | | FD176 | G1054 | 2 | DF660 | CW | CRW | | FD220 | G1054 | DF636 | W | | |
| MONSTER 800 S2R | 800 | 05 | | FD138 | G1370 | 2 | DF870 | CW | | | FD220 | G1371 | DF769 | W | | |
| SCRAMBLER (TODAS) (ALL) | 800 | 15 | | FD475 | G1370 | 1 | | | | | FD220 | G1371 | | | | |
| HYPERMOTARD | 821 | 13 | | FD475 | G1370 | 2 | DF773 | CW | | | FD220 | G1054 | DF769 | W | | |
| HYPERMOTARD SP | 821 | 13 | | FD475 | G1370 | 2 | DF773 | CW | | | FD220 | G1054 | DF769 | W | | |
| HYPERSTRADA | 821 | 13 | | FD475 | G1370 | 2 | DF773 | CW | | | FD220 | G1371 | DF769 | W | | |
| MONSTER 821 | 821 | 14 | | FD475 | G1370 | 2 | DF880 | CW | CRW | | FD220 | G1371 | DF769 | W | | |
| 848 | 848 | 08 | | FD176 | G1375 | 2 | DF880 | CW | CRW | | FD220 | G1371 | DF769 | W | | |
| 848 EVO | 848 | 10 | | FD373 | G1375 | 2 | DF880 | CW | CRW | | FD220 | G1371 | DF769 | W | | |
| 848 EVO CORSE SE | 848 | 12 | | FD373 | G1375 | 2 | DF880 | CW | CRW | | FD220 | G1371 | DF769 | W | | |
| 848 S | 848 | 08 | | FD176 | G1375 | 2 | DF880 | CW | CRW | | FD220 | G1371 | DF769 | W | | |
| 848 STREETFIGHTER | 848 | 12 | | FD176 | G1370 | 2 | DF880 | CW | CRW | | FD220 | G1371 | DF769 | W | | |
| 848 STREETFIGHTER EVO SP | 848 | 12 | | FD373 | G1370 | 2 | DF880 | CW | CRW | | FD220 | G1371 | DF769 | W | | |
| 851 SPORT PRODUCTION | 851 | 90 | 91 | FD068 | G1054 | 2 | DF660 | CW | CRW | | FD012 | G1054 | DF636 | W | | |
| 888 CORSA | 888 | 91 | 91 | FD068 | G1054 | 2 | | | | | FD012 | G1054 | | | | |
| 888 DESMO QUATTRO | 888 | 93 | 93 | FD068 | G1054 | 2 | | | | | FD012 | G1054 | DF636 | W | | |
| 888 SPS | 888 | 92 | 92 | FD068 | G1054 | 2 | | | | | FD012 | G1054 | DF636 | W | | |
| 888 STRADA | 888 | 94 | 95 | FD068 | G1054 | 2 | | | | | FD012 | G1054 | | | | |
| 899 PANIGALE | 899 | 13 | | FD475 | G1375 | 2 | | | | | FD220 | G1371 | | | | |
| MH 900 E | 900 | 00 | | FD176 | G1054 | 2 | DF660 | CW | CRW | | FD012 | G1054 | | | | |
| 900 M MONSTER | 900 | 93 | 00 | FD068 | G1054 | 2 | DF660 | CW | CRW | | FD012 | G1054 | DF636 | W | | |
| 900 SS | 900 | 91 | 97 | FD068 | G1054 | 2 | DF660 | CW | CRW | | FD012 | G1054 | DF636 | W | | |
| 900 SS | 900 | 98 | | FD176 | G1054 | 2 | DF660 | CW | CRW | | FD220 | G1054 | DF636 | W | | |



**OE:** Original equipment (original replacement disc) • **OE:** Equipo original (disco de remplazo del original) For other models years previous to 1990 visit **www.galferonline.es** • Para otros modelos anteriores al año 1990 visitar **www.galferonline.es**
For consult TÜV (ABE) type approvals visit **www.galfermoto.com --> DOWNALOAD --> TÜV CERTIFICATIONS** • Para consultar las homologaciones TÜV (ABE) visitar **www.galfermoto.com --> DESCARGAS --> CERTIFICACIONES TÜV**

| BRAND & MODEL • MARCA Y MODELO<br>MARCA E MODELLO • MARQUE ET MODÉLE | C.C. | YEAR | | FRONT FD MF | FRONT COMPOUND RECOMMENDED | FRONT N° | FRONT DF | FRONT OE | FRONT UPGRADE 1 | FRONT UPGRADE 2 | REAR FD MF | REAR COMPOUND RECOMMENDED | REAR DF | REAR OE | REAR UPGRADE | KITS KG |
|---|---|---|---|---|---|---|---|---|---|---|---|---|---|---|---|---|
| 900 SUPERLIGHT | 900 | 93 | | FD068 | G1054 | 2 | | | | | FD012 | G1054 | | | | |
| 907 i.e. | 907 | 91 | | FD068 | G1054 | 2 | | | | | FD012 | G1054 | | | | |
| MONSTER S4 | 916 | 01 | 02 | FD176 | G1054 | 2 | DF660 | CW | CRW | | FD012 | G1054 | DF636 | W | | |
| 916 STRADA | 916 | 94 | 98 | FD068 | G1054 | 2 | DF660 | CW | CRW | | FD012 | G1054 | DF630 | W | | |
| 916 SENNA | 916 | 94 | 97 | FD068 | G1054 | 2 | DF660 | CW | CRW | | FD012 | G1054 | DF630 | W | | |
| 916 SPS | 916 | 98 | 98 | FD068 | G1054 | 2 | DF660 | CW | CRW | | FD012 | G1054 | DF630 | W | | |
| ST 4 | 916 | 99 | | FD176 | G1054 | 2 | DF660 | CW | CRW | | FD220 | G1054 | DF636 | W | | |
| ST 2 944 | 944 | 97 | 98 | FD068 | G1370 | 2 | DF660 | CW | CRW | | FD220 | G1371 | DF636 | W | | |
| DESMOSEDICI RR | 989 | 07 | | FD373 | G1375 | 2 | DF880 | CW | CRW | | FD220 | G1371 | DF706 | W | | |
| ST 3 / s ABS | 992 | 06 | | FD176 | G1054 | 2 | DF660 | CW | CRW | | FD220 | G1054 | DF636 | W | | |
| 996 S | 996 | 99 | 01 | FD176 | G1054 | 2 | DF660 | CW | CRW | | FD012 | G1054 | DF630 | W | | |
| 996 R | 996 | 99 | 01 | FD262 | G1370 | 2 | DF660 | CW | CRW | | FD220 | G1371 | DF630 | W | | |
| MONSTER S4R | 996 | 03 | 05 | FD176 | G1054 | 2 | DF660 | CW | CRW | | FD220 | G1054 | DF769 | W | | |
| 998 | 998 | 02 | | FD176 | G1370 | 2 | DF881 | CW | FLW | CRW | FD012 | G1371 | DF630 | W | | |
| 998 R | 998 | 02 | | FD262 | G1370 | 2 | DF660 | CW | CRW | | FD012 | G1371 | DF630 | W | | |
| 998 S | 998 | 02 | | FD262 | G1370 | 2 | DF883 | CW | | | FD012 | G1371 | DF630 | W | | |
| 999 R | 999 | 03 | | FD262 | G1370 | 2 | DF880 | CW | CRW | | FD220 | G1371 | DF706 | W | | |
| 999 S | 999 | 03 | | FD262 | G1370 | 2 | DF880 | CW | CRW | | FD220 | G1371 | DF706 | W | | |
| 1000 MONSTER S i.e. | 1000 | 03 | 05 | FD176 | G1054 | 2 | DF660 | CW | CRW | | FD220 | G1054 | DF636 | W | | |
| 1000 MONSTER S2R | 1000 | 06 | | FD176 | G1054 | 2 | DF660 | CW | CRW | | FD220 | G1054 | DF769 | W | | |
| 1000 MONSTER S4R | 1000 | 03 | 05 | FD176 | G1054 | 2 | DF660 | CW | CRW | | FD220 | G1054 | DF769 | W | | |
| 1000 MONSTER S4Rs | 1000 | 06 | | FD262 | G1370 | 2 | DF880 | CW | CRW | | FD220 | G1371 | DF769 | W | | |
| GT 1000 | 1000 | 05 | | FD172 | G1370 | 2 | DF660 | CW | CRW | | FD165 | G1371 | DF636 | W | | |
| MULTISTRADA 1000 DS | 1000 | 03 | | FD176 | G1054 | 2 | DF768 | W | | | FD220 | G1054 | DF769 | W | | |
| MULTISTRADA 1000 S DS | 1000 | 06 | | FD262 | G1370 | 2 | DF768 | W | | | FD220 | G1371 | DF769 | W | | |
| PAUL SMART 1000 | 1000 | 05 | | FD172 | G1370 | 2 | DF660 | CW | CRW | | FD165 | G1371 | DF636 | W | | |
| SPORT 1000 | 1000 | 05 | | FD172 | G1370 | 2 | DF660 | CW | CRW | | FD165 | G1371 | DF636 | W | | |
| SPORT 1000 S | 1000 | 07 | | FD172 | G1370 | 2 | DF660 | CW | CRW | | FD165 | G1371 | DF636 | W | | |
| SS 1000 DS | 1000 | 03 | | FD176 | G1054 | 2 | DF660 | CW | CRW | | FD220 | G1054 | DF636 | W | | |
| 1098 | 1100 | 07 | 08 | FD373 | G1375 | 2 | DF774 | CW | CRW | | FD220 | G1371 | DF775 | W | | |
| 1098 S | 1100 | 07 | 08 | FD373 | G1375 | 2 | DF774 | CW | CRW | | FD220 | G1371 | DF775 | W | | |
| HYPERMOTARD | 1100 | 07 | 09 | FD176 | G1375 | 2 | DF773 | CW | | | FD220 | G1054 | DF769 | W | | |
| HYPERMOTARD EVO | 1100 | 10 | | FD176 | G1375 | 2 | DF773 | CW | | | FD220 | G1054 | DF769 | W | | |
| HYPERMOTARD EVO SP | 1100 | 10 | | FD373 | G1370 | 2 | DF773 | CW | | | FD220 | G1054 | DF769 | W | | |
| HYPERMOTARD S | 1100 | 07 | 09 | FD373 | G1370 | 2 | DF773 | CW | | | FD220 | G1054 | DF769 | W | | |
| MONSTER | 1100 | 09 | | FD176 | G1370 | 2 | DF807 | CW | CRW | | FD220 | G1371 | DF769 | W | | |
| MONSTER EVO | 1100 | 11 | | FD176 | G1370 | 2 | DF807 | CW | CRW | | FD220 | G1371 | DF769 | W | | |
| MONSTER S | 1100 | 09 | | FD176 | G1370 | 2 | DF880 | CW | CRW | | FD220 | G1371 | DF769 | W | | |
| MONSTER S (OHLINS) | 1100 | 09 | | FD176 | G1370 | 2 | DF880 | CW | CRW | | FD220 | G1371 | DF769 | W | | |
| MULTISTRADA 1100 DS | 1100 | 07 | | FD176 | G1370 | 2 | DF768 | W | | | FD220 | G1371 | DF769 | W | | |
| MULTISTRADA 1100 S DS | 1100 | 07 | | FD176 | G1370 | 2 | DF768 | W | | | FD220 | G1371 | DF769 | W | | |
| STREETFIGHTER | 1100 | 09 | | FD373 | G1375 | 2 | DF774 | CW | CRW | | FD220 | G1371 | DF775 | W | | |
| STREETFIGHTER S | 1100 | 09 | | FD373 | G1375 | 2 | DF774 | CW | CRW | | FD220 | G1371 | DF775 | W | | |
| 1198 | 1198 | 10 | | FD373 | G1375 | 2 | DF774 | CW | CRW | | FD220 | G1371 | DF775 | W | | |
| 1198 R SP | 1198 | 09 | | FD373 | G1375 | 2 | DF774 | CW | CRW | | FD220 | G1371 | DF775 | W | | |
| 1198 S | 1198 | 09 | | FD373 | G1375 | 2 | DF774 | CW | CRW | | FD220 | G1371 | DF775 | W | | |
| 1199 PANIGALE | 1199 | 12 | | FD373 | G1375 | 2 | DF774 | CW | CRW | | FD220 | G1371 | DF839 | W | | |
| 1199 PANIGALE RS13 | 1199 | 13 | | FD373 | G1375 | 2 | DF774 | CW | CRW | | FD220 | G1371 | DF839 | W | | |
| 1199 PANIGALE SUPERLEGGERA | 1199 | 14 | | FD373 | G1375 | 2 | DF774 | CW | CRW | | FD220 | G1371 | DF839 | W | | |
| DIAVEL 1200 | 1200 | 11 | | FD373 | G1375 | 2 | DF807 | CW | CRW | | FD172 | G1370 | DF812 | W | | |
| DIAVEL STRADA 1200 | 1200 | 13 | | FD373 | G1375 | 2 | DF807 | CW | CRW | | FD172 | G1370 | DF812 | W | | |
| MONSTER 1200 | 1200 | 14 | | FD475 | G1375 | 2 | DF807 | CW | CRW | | FD220 | G1371 | DF775 | W | | |
| MONSTER 1200 S | 1200 | 14 | | FD373 | G1375 | 2 | DF774 | CW | CRW | | FD220 | G1371 | DF775 | W | | |
| MULTISTRADA 1200 | 1200 | 10 | 14 | FD176 | G1370 | 2 | DF807 | CW | CRW | | FD220 | G1371 | DF775 | W | | |
| MULTISTRADA 1200 | 1200 | 15 | | FD475 | G1370 | 2 | DF807 | CW | CRW | | FD172 | G1371 | DF812 | | | |
| MULTISTRADA 1200 PIKES PEAK | 1200 | 13 | 14 | FD176 | G1370 | 2 | DF807 | CW | CRW | | FD220 | G1371 | DF775 | W | | |
| MULTISTRADA 1200 S GRAN TURISMO | 1200 | 13 | 14 | FD176 | G1370 | 2 | DF807 | CW | CRW | | FD220 | G1371 | DF775 | W | | |
| MULTISTRADA 1200 S | 1200 | 15 | | FD373 | G1370 | 2 | DF774 | CW | CRW | | FD172 | G1371 | DF812 | | | |
| MULTISTRADA 1200 S D air | 1200 | 15 | | FD373 | G1370 | 2 | DF774 | CW | CRW | | FD172 | G1371 | DF812 | | | |
| MULTISTRADA 1200 SS | 1200 | 10 | 14 | FD176 | G1370 | 2 | DF807 | CW | CRW | | FD220 | G1371 | DF775 | W | | |
| MULTISTRADA 1200 ST | 1200 | 10 | 14 | FD176 | G1370 | 2 | DF807 | CW | CRW | | FD220 | G1371 | DF775 | W | | |
| 1299 PANIGALE | 1299 | 15 | | FD373 | G1375 | 2 | DF774 | CW | CRW | | FD220 | G1371 | DF839 | W | | |
| 1299 PANIGALE R | 1299 | 15 | | FD373 | G1375 | 2 | DF774 | CW | CRW | | FD220 | G1371 | DF839 | W | | |
| 1299 PANIGALE S | 1299 | 15 | | FD373 | G1375 | 2 | DF774 | CW | CRW | | FD220 | G1371 | DF839 | W | | |
| **GAS GAS** | | | | | | | | | | | | | | | | |
| 250 PAMPERA | 250 | 96 | 02 | FD065 | G1054 | 1 | | | | | FD065 | G1054 | DF615 | | | |
| 250 PAMPERA | 250 | 03 | | FD162 | G1054 | 1 | DF674 | W | FLW | | FD225 | G1054 | | | | |
| 320 PAMPERA | 320 | 99 | | FD065 | G1054 | 1 | | | | | FD065 | G1054 | DF615 | | | |
| HALLEY 450 | 450 | 09 | | FD409 | G1054 | 1 | DF677 | W | FLW | FLS | FD252 | G1054 | DF678 | WLL | WS | |
| **GILERA-PIAGGIO** | | | | | | | | | | | | | | | | |
| DNA 180 (G) | 180 | 01 | | FD162 | G1054 | 1 | DF666 | W | | | FD263 | G1054 | DF666 | W | | |
| DNA 180 (H) | 180 | 01 | | FD277 | G1054 | 1 | DF666 | W | | | FD263 | G1054 | DF666 | W | | |
| MAD-MUD (G) | 180 | 02 | | FD162 | G1054 | 1 | | | | | FD263 | G1054 | | | | |

| BRAND & MODEL • MARCA Y MODELO<br>MARCA E MODELLO • MARQUE ET MODÉLE | C.C. | YEAR | FRONT FD MF | FRONT COMPOUND RECOMMENDED | FRONT N° | FRONT DF | FRONT OE | FRONT UPGRADE 1 | FRONT UPGRADE 2 | REAR FD MF | REAR COMPOUND RECOMMENDED | REAR DF | REAR OE | REAR UPGRADE | KITS KG |
|---|---|---|---|---|---|---|---|---|---|---|---|---|---|---|---|
| MAD-MUD (H) | 180 | 02 | FD277 | G1054 | 1 | | | | | FD263 | G1054 | | | | |
| RUNNER 180 FXR (G) | 180 | 98 | FD162 | G1054 | 1 | DF737 | W | | | MF | | - | | | |
| RUNNER 180 FXR (H) | 180 | 98 | FD277 | G1054 | 1 | DF737 | W | | | MF | | - | | | |
| RUNNER 180 SP | 180 | 99 | FD162 | G1054 | 1 | DF737 | W | | | FD200 | G1054 | DF666 | W | | |
| RUNNER 180 VXR (G) | 180 | 01 | FD162 | G1054 | 1 | DF737 | W | | | FD263 | G1054 | DF666 | W | | |
| RUNNER 180 VXR (H) | 180 | 01 | FD277 | G1054 | 1 | DF737 | W | | | FD263 | G1054 | DF666 | W | | |
| RUNNER 200 VXR | 200 | 02 | FD162 | G1054 | 1 | DF737 | W | | | FD263 | G1054 | | | | |
| RUNNER 200 VXR | 200 | 06 | FD277 | G1054 | 1 | | | | | FD263 | G1054 | | | | |
| NEXUS i.e. | 250 | 06 | FD138 | G1054 | 2 | DF667 | W | | | FD220 | G1054 | DF666 | W | | |
| NEXUS i.e. | 250 | 07 | FD277 | G1054 | 1 | DF667 | W | | | FD263 | G1054 | DF666 | W | | |
| NEXUS i.e. | 300 | 09 | FD277 | G1054 | 1 | DF667 | W | | | FD277 | G1380 | DF666 | W | | |
| 350 NORDWEST | 491 | 94 | FD119 | G1054 | 1 | | | | | FD012 | G1054 | | | | |
| 500 SATURNO PIUMA | 500 | 90 | FD068 | G1054 | 1 | | | | | FD065 | G1054 | | | | |
| FUOCO 500 i.e. | 500 | 07 | FD200 | G1054 | 2 | DF714 | W | | | FD277 | G1380 | DF666 | W | | |
| NEXUS | 500 | 03 | FD138 | G1054 | 2 | DF667 | W | | | FD220 | G1380 | DF666 | W | | |
| NEXUS i.e. SP | 500 | 06 | FD138 | G1054 | 2 | DF667 | W | | | FD220 | G1380 | DF666 | W | | |
| 600 NORDWEST | 600 | 91 | FD118 | G1054 | 2 | | | | | FD012 | G1054 | | | | |
| 600 RC FOUR VALVE | 600 | 91 | FD089 | G1054 | 1 | DF616 | | | | FD079 | G1054 | | | | |
| 600 SUPERSPORT | 600 | 02 | FD262 | G1054 | 2 | DF660 | CW | CRW | | FD220 | G1054 | | | | |
| 600 XRT | 600 | 90 | FD089 | G1054 | 1 | | | | | FD012 | G1054 | | | | |
| RC 600 R | 600 | 92 | FD089 | G1054 | 1 | | | | | FD079 | G1054 | | | | |
| RC 600 R, COBRA | 600 | 94 | FD118 | G1054 | 1 | | | | | FD170 | G1054 | | | | |
| GP 800 | 800 | 08 | FD138 | G1380 | 2 | | | | | FD277 | G1380 | | | | |
| GP 850 CORSA | 850 | 09 | FD262 | G1054 | 2 | | | | | FD165 | G1054 | | | | |
| **HARLEY DAVIDSON** | | | | | | | | | | | | | | | |
| **SERIE SPORTSTER** | | | | | | | | | | | | | | | |
| XL 50th ANIVERSARIO | 883 | 07 | FD339 | G1370 | 1 | DF680 | W | CW | FLW | FD340 | G1371 | DF681 | W | | |
| XL IRON | 883 | 09 | FD339 | G1370 | 1 | DF680 | W | CW | FLW | FD340 | G1371 | DF681 | W | | |
| XL ROADSTER | 883 | 10 | FD339 | G1370 | 2 | DF680 | W | CW | FLW | FD340 | G1371 | DF681 | W | | |
| XL SPORTSTER CUSTOM | 883 | 00 | FD235 | G1054 | 1 | DF680 | W | CW | FLW | FD235 | G1370 | DF681 | W | | |
| XL SPORTSTER CUSTOM | 883 | 04 | FD339 | G1054 | 1 | DF680 | W | CW | FLW | FD340 | G1371 | DF681 | W | | |
| XL SPORTSTER HUGGER | 883 | 00 | FD235 | G1054 | 1 | DF680 | W | CW | FLW | FD235 | G1370 | DF681 | W | | |
| XL SPORTSTER LOW | 883 | 04 | FD339 | G1054 | 1 | DF680 | W | CW | FLW | FD340 | G1371 | DF681 | W | | |
| XL SPORTSTER R | 883 | 05 | FD339 | G1370 | 2 | DF680 | W | CW | FLW | FD340 | G1371 | DF681 | W | | |
| XL SPORTSTER STANDARD | 883 | 04 | FD339 | G1054 | 1 | DF680 | W | CW | FLW | FD340 | G1371 | DF681 | W | | |
| XLH SPORTSTER | 883 | 00 | FD235 | G1054 | 1 | DF680 | W | CW | FLW | FD235 | G1370 | DF681 | W | | |
| XLH SPORTSTER R | 883 | 00 | FD235 | G1054 | 1 | DF680 | W | CW | FLW | FD235 | G1370 | DF681 | W | | |
| XLH SPORTSTER R | 883 | 05 | FD339 | G1370 | 1 | DF680 | W | CW | FLW | FD340 | G1371 | DF681 | W | | |
| XL L SUPERLOW | 883 | 11 | FD339 | G1370 | 1 | DF680 | W | CW | FLW | FD340 | G1371 | DF681 | W | | |
| XL NIGHTSTER | 1200 | 08 | FD339 | G1370 | 1 | DF680 | W | CW | FLW | FD340 | G1371 | DF681 | W | | |
| XL ROADSTER | 1200 | 04 | FD339 | G1054 | 2 | DF680 | W | CW | FLW | FD340 | G1371 | DF681 | W | | |
| XL SPORTSTER CUSTOM | 1200 | 00 | FD235 | G1054 | 1 | DF680 | W | CW | FLW | FD235 | G1370 | DF681 | W | | |
| XL SPORTSTER CUSTOM | 1200 | 04 | FD339 | G1054 | 1 | DF680 | W | CW | FLW | FD340 | G1371 | DF681 | W | | |
| XL SPORTSTER LOW | 1200 | 07 | FD339 | G1370 | 1 | DF680 | W | CW | FLW | FD340 | G1371 | DF681 | W | | |
| XL SPORTSTER SPORT | 1200 | 00 | FD235 | G1054 | 1 | DF680 | W | CW | FLW | FD235 | G1370 | DF681 | W | | |
| XL 1200 V SEVENTY-TWO | 1200 | 12 | FD339 | G1370 | 1 | DF680 | W | CW | FLW | FD340 | G1371 | DF681 | W | | |
| XL 1200 X FORTY EIGHT | 1200 | 10 | FD339 | G1370 | 1 | DF680 | W | CW | FLW | FD340 | G1371 | DF681 | W | | |
| XR 1200 | 1200 | 08 | FD219 | G1375 | 2 | DF680 | W | CW | FLW | FD340 | G1371 | | | | |
| XR 1200 R | 1200 | 10 | FD219 | G1375 | 2 | | | | | FD340 | G1371 | | | | |
| XR 1200 X | 1200 | 10 | FD219 | G1375 | 2 | | | | | FD340 | G1371 | | | | |
| **SERIE DYNA** | | | | | | | | | | | | | | | |
| FXD SUPER GLIDE | 1340 | 00 | FD235 | G1054 | 1 | DF680 | W | CW | FLW | FD235 | G1370 | DF681 | W | | |
| FXDL LOW RIDER | 1340 | 00 | FD235 | G1054 | 2 | DF680 | W | CW | FLW | FD235 | G1370 | DF681 | W | | |
| FXDSCON DYNA CONVER | 1340 | 00 | FD235 | G1054 | 2 | DF680 | W | CW | FLW | FD235 | G1370 | DF681 | W | | |
| FXDWG WIDE GLIDE | 1340 | 00 | FD235 | G1370 | 1 | DF680 | W | CW | FLW | FD235 | G1370 | DF681 | W | | |
| FXDX SUPER GLIDE SPORT | 1340 | 00 | FD235 | G1054 | 2 | DF680 | W | CW | FLW | FD235 | G1370 | DF681 | W | | |
| FXDXT SUPER GLIDE T SPORT | 1340 | 01 | FD375 | G1054 | 2 | DF680 | W | CW | FLW | FD235 | G1370 | DF681 | W | | |
| FXD SUPER GLIDE (cast wheel) | 1450 | 08 | FD405 | G1370 | 1 | | | | | FD406 | G1371 | DF681 | W | | |
| FXD SWITCHBACK | 1450 | 12 | FD405 | G1370 | 1 | DF835 | CW | | | FD406 | G1371 | | | | |
| FXDBi STREET BOB | 1450 | 06 | FD235 | G1370 | 1 | | | | | FD235 | G1370 | DF681 | W | | |
| FXDBi STREET BOB | 1450 | 08 | FD235 | G1370 | 1 | | | | | FD406 | G1371 | DF681 | W | | |
| FXDCi SUPER GLIDE CUSTOM | 1450 | 05 | FD235 | G1370 | 1 | | | | | FD235 | G1370 | DF681 | W | | |
| FXDCi SUPER GLIDE CUSTOM (cast wheel) | 1450 | 06 | FD235 | G1370 | 1 | | | | | FD235 | G1370 | DF681 | W | | |
| FXDCi SUPER GLIDE CUSTOM DYNA | 1450 | 06 | FD235 | G1370 | 1 | | | | | FD235 | G1370 | DF681 | W | | |
| FXDCi SUPER GLIDE CUSTOM DYNA | 1450 | 08 | FD405 | G1370 | 1 | | | | | FD406 | G1371 | DF681 | W | | |
| FXDF FAT BOB (cast wheel) | 1450 | 08 | FD405 | G1370 | 1 | | | | | FD406 | G1371 | DF681 | W | | |
| FXDi 35th ANIVERSARIO SUPER GLIDE | 1450 | 06 | FD235 | G1370 | 1 | | | | | FD235 | G1370 | DF681 | W | | |
| FXDi SUPER GLIDE | 1450 | 04 | FD235 | G1370 | 1 | DF680 | W | CW | FLW | FD235 | G1370 | DF681 | W | | |
| FXDi SUPER GLIDE (cast wheel) | 1450 | 06 | FD235 | G1370 | 1 | | | | | FD235 | G1370 | DF681 | W | | |
| FXDLi LOW RIDER | 1450 | 04 | FD235 | G1370 | 1 | DF680 | W | CW | FLW | FD235 | G1370 | DF681 | W | | |
| FXDLi LOW RIDER (cast wheel) | 1450 | 06 | FD235 | G1370 | 1 | | | | | FD235 | G1370 | DF681 | W | | |
| FXDLi LOW RIDER (cast wheel) | 1450 | 08 | FD405 | G1370 | 1 | | | | | FD406 | G1371 | DF681 | W | | |
| FXDLi LOW RIDER DYNA | 1450 | 06 | FD235 | G1370 | 1 | | | | | FD235 | G1370 | DF681 | W | | |



**OE:** Original equipment (original replacement disc) • **OE:** Equipo original (disco de remplazo del original) For other models years previous to 1990 visit **www.galferonline.es** • Para otros modelos anteriores al año 1990 visitar **www.galferonline.es**
For consult TÜV (ABE) type approvals visit **www.galfermoto.com --> DOWNALOAD --> TÜV CERTIFICATIONS** • Para consultar las homologaciones TÜV (ABE) visitar **www.galfermoto.com --> DESCARGAS --> CERTIFICACIONES TÜV**

| BRAND & MODEL • MARCA Y MODELO<br>MARCA E MODELLO • MARQUE ET MODÉLE | C.C. | YEAR | | FRONT FD MF | FRONT COMPOUND RECOMMENDED | FRONT N° | FRONT DF | FRONT OE | FRONT UPGRADE 1 | FRONT UPGRADE 2 | REAR FD MF | REAR COMPOUND RECOMMENDED | REAR DF | REAR OE | REAR UPGRADE | KITS KG |
|---|---|---|---|---|---|---|---|---|---|---|---|---|---|---|---|---|
| FXDWG DYNA WIDE GLIDE | 1450 | 08 | | FD405 | G1370 | 1 | | | | | FD406 | G1371 | DF681 | W | | |
| FXDWG WIDE GLIDE | 1450 | 08 | | FD405 | G1370 | 1 | | | | | FD406 | G1371 | DF681 | W | | |
| FXDWGi WIDE GLIDE | 1450 | 04 | 05 | FD235 | G1370 | 1 | DF680 | W | CW | FLW | FD235 | G1370 | DF681 | W | | |
| FXDWGi WIDE GLIDE DYNA | 1450 | 06 | 09 | FD235 | G1370 | 1 | | | | | FD235 | G1370 | DF681 | W | | |
| FXDWGi WIDE GLIDE DYNA | 1450 | 10 | | FD405 | G1370 | 1 | | | | | FD406 | G1371 | DF681 | W | | |
| FXDXi SUPER GLIDE SPORT | 1450 | 04 | | FD235 | G1054 | 2 | DF680 | W | CW | FLW | FD235 | G1370 | DF681 | W | | |
| **SERIE SOFTAIL** | | | | | | | | | | | | | | | | |
| FLSTC/i HERITAGE CLASSIC | 1340 | 00 | | FD235 | G1054 | 1 | DF680 | W | CW | FLW | FD235 | G1370 | DF681 | W | | |
| FLSTF/i FAT BOY | 1340 | 00 | 06 | FD235 | G1370 | 1 | DF680 | W | CW | FLW | FD235 | G1370 | DF681 | W | | |
| FLSTi FAT BOY 15th ANIVERSARIO | 1340 | 05 | | FD235 | G1370 | 1 | DF680 | W | CW | FLW | FD235 | G1370 | DF681 | W | | |
| FLSTS HERITAGE SPRINGER | 1340 | 00 | | FD124 | G1054 | 1 | DF680 | W | CW | FLW | FD235 | G1370 | DF681 | W | | |
| FXST/i SOFTAIL STANDARD | 1340 | 00 | 05 | FD235 | G1370 | 1 | DF680 | W | CW | FLW | FD235 | G1370 | DF682 | W | | |
| FXSTB/i NIGHT TRAIN | 1340 | 00 | 05 | FD235 | G1370 | 1 | DF680 | W | CW | FLW | FD235 | G1370 | DF681 | W | | |
| FXSTD/i SOFTAIL DEUCE | 1340 | 00 | | FD235 | G1054 | 1 | DF680 | W | CW | FLW | FD235 | G1370 | DF681 | W | | |
| FXSTS/i SOFTAIL SPRINGER | 1340 | 00 | | FD124 | G1054 | 1 | DF679 | W | | | FD235 | G1370 | DF681 | W | | |
| FLS SOFTAIL SLIM | 1450 | 12 | | FD405 | G1370 | 1 | DF679 | W | | | FD406 | G1371 | DF681 | W | | |
| FLST/i HERITAGE SOFTAIL | 1450 | 06 | | FD235 | G1370 | 1 | DF680 | W | CW | FLW | FD235 | G1370 | DF681 | W | | |
| FLSTC HERITAGE CLASSIC SOFTAIL | 1450 | 07 | 07 | FD235 | G1370 | 1 | DF680 | W | CW | FLW | FD235 | G1370 | DF681 | W | | |
| FLSTC HERITAGE CLASSIC SOFTAIL | 1450 | 08 | | FD405 | G1370 | 1 | DF680 | W | CW | FLW | FD406 | G1371 | DF681 | W | | |
| FLSTF FAT BOY | 1450 | 08 | | FD405 | G1370 | 1 | DF680 | W | CW | FLW | FD406 | G1371 | DF681 | W | | |
| FLSTF/i FAT BOY | 1450 | 07 | 07 | FD235 | G1370 | 1 | DF680 | W | CW | FLW | FD235 | G1370 | DF681 | W | | |
| FLSTFB FAT BOY SPECIAL | 1450 | 10 | | FD405 | G1370 | 1 | DF680 | W | CW | FLW | FD406 | G1371 | DF681 | W | | |
| FLSTN/i SOFTAIL DE LUXE | 1450 | 05 | 07 | FD235 | G1370 | 1 | DF680 | W | CW | FLW | FD235 | G1370 | DF681 | W | | |
| FLSTN/i SOFTAIL DE LUXE | 1450 | 08 | | FD405 | G1370 | 1 | DF680 | W | CW | FLW | FD406 | G1371 | DF681 | W | | |
| FLSTSB SOFTAIL CROSS BONES | 1450 | 08 | | FD124 | G1054 | 1 | DF680 | W | CW | FLW | FD235 | G1370 | DF681 | W | | |
| FLSTSC/i SPRINGER CLASSIC | 1450 | 05 | | FD124 | G1054 | 1 | DF680 | W | CW | FLW | FD235 | G1370 | DF681 | W | | |
| FLSTSC/i SPRINGER CLASSIC SOFTAIL | 1450 | 06 | | FD124 | G1054 | 1 | DF680 | W | CW | FLW | FD375 | G1054 | DF681 | W | | |
| FXCW ROCKER | 1450 | 08 | | FD405 | G1370 | 1 | DF680 | W | CW | FLW | FD406 | G1371 | DF681 | W | | |
| FXCWC ROCKER C | 1450 | 08 | | FD405 | G1370 | 1 | DF680 | W | CW | FLW | FD406 | G1371 | DF681 | W | | |
| FXS BLACKLINE | 1450 | 11 | | FD405 | G1370 | 1 | DF680 | W | CW | FLW | FD406 | G1371 | DF681 | W | | |
| FXST/i SOFTAIL STANDARD | 1450 | 06 | | FD235 | G1370 | 1 | DF680 | W | CW | FLW | FD235 | G1370 | DF681 | W | | |
| FXSTB/i NIGHT TRAIN SOFTAIL | 1450 | 06 | 07 | FD235 | G1370 | 1 | DF680 | W | CW | FLW | FD235 | G1370 | DF681 | W | | |
| FXSTB/i NIGHT TRAIN SOFTAIL | 1450 | 08 | | FD405 | G1370 | 1 | DF680 | W | CW | FLW | FD406 | G1371 | DF681 | W | | |
| FXSTC SOFTAIL CUSTOM | 1450 | 07 | 07 | FD235 | G1370 | 1 | DF680 | W | CW | FLW | FD235 | G1370 | DF681 | W | | |
| FXSTC SOFTAIL CUSTOM | 1450 | 08 | | FD405 | G1370 | 1 | DF680 | W | CW | FLW | FD406 | G1371 | DF681 | W | | |
| **SERIE TOURING** | | | | | | | | | | | | | | | | |
| FLHR SERIES | 1340 | 94 | 99 | FD124 | G1054 | 2 | DF679 | W | | | FD125 | G1054 | | | | |
| FLHR/i ROAD KING | 1340 | 00 | 07 | FD235 | G1370 | 2 | DF680 | W | CW | FLW | FD235 | G1370 | DF681 | W | | |
| FLHR/i ROAD KING | 1340 | 00 | 07 | FD235 | G1370 | 2 | DF680 | W | CW | FLW | FD235 | G1370 | DF681 | W | | |
| FLHRCI SERIES | 1340 | 94 | 99 | FD124 | G1054 | 2 | DF679 | W | | | FD125 | G1054 | | | | |
| FLHRS/i ROAD KING CUSTOM | 1340 | 04 | 07 | FD235 | G1370 | 2 | DF680 | W | CW | FLW | FD235 | G1370 | DF681 | W | | |
| FLHT/i ELECTRA GLIDE STANDARD | 1340 | 00 | 07 | FD235 | G1370 | 2 | DF680 | W | CW | FLW | FD235 | G1370 | DF681 | W | | |
| FLHTC/i ELECTRA GLIDE CLASSIC | 1340 | 04 | 07 | FD235 | G1370 | 2 | DF680 | W | CW | FLW | FD235 | G1370 | DF681 | W | | |
| FLHTC/i ELECTRA GLIDE CLASSIC | 1340 | 08 | | FD369 | G1370 | 2 | DF835 | CW | | | FD369 | G1370 | | | | |
| FLHTCU ELECTRA GLIDE ULTRA CLASSIC | 1340 | 00 | 07 | FD235 | G1370 | 2 | DF680 | W | CW | FLW | FD235 | G1370 | DF681 | W | | |
| FLTR/i ROAD GLIDE | 1340 | 00 | 07 | FD235 | G1370 | 2 | DF680 | W | CW | FLW | FD235 | G1370 | DF681 | W | | |
| FLHR ROAD KING | 1450 | 08 | | FD369 | G1370 | 2 | DF835 | CW | | | FD369 | G1370 | | | | |
| FLHRC ROAD KING CLASSIC | 1450 | 08 | | FD369 | G1370 | 2 | DF835 | CW | | | FD369 | G1370 | | | | |
| FLHT ELECTRA GLIDE STANDARD | 1450 | 08 | | FD369 | G1370 | 2 | DF835 | CW | | | FD369 | G1370 | | | | |
| FLHTC ELECTRA GLIDE CLASSIC | 1450 | 08 | | FD369 | G1370 | 2 | DF835 | CW | | | FD369 | G1370 | | | | |
| FLHTCU ULTRA CLASSIC ELECTRA GLIDE | 1450 | 08 | 13 | FD369 | G1370 | 2 | DF835 | CW | | | FD369 | G1370 | | | | |
| FLHTCU ULTRA CLASSIC ELECTRA GLIDE | 1450 | 14 | | FD369 | G1370 | 2 | DF838 | | | | FD369 | G1370 | | | | |
| FLHTK ELECTRA GLIDE ULTRA LTD | 1450 | 10 | | FD369 | G1370 | 2 | DF835 | CW | | | FD369 | G1370 | | | | |
| FLHTP ELECTRA GLIDE STD. POLICE | 1450 | 14 | | FD369 | G1370 | 2 | DF838 | | | | FD369 | G1370 | | | | |
| FLHX/i STREET GLIDE | 1450 | 06 | 07 | FD235 | G1370 | 2 | DF680 | W | CW | FLW | FD235 | G1370 | DF681 | W | | |
| FLHX/i STREET GLIDE | 1450 | 08 | 13 | FD369 | G1370 | 2 | DF835 | CW | | | FD369 | G1370 | | | | |
| FLHX/i STREET GLIDE | 1450 | 14 | | FD369 | G1370 | 2 | DF838 | | | | FD369 | G1370 | | | | |
| FLTR ROAD GLIDE | 1450 | 08 | | FD369 | G1370 | 2 | DF835 | CW | | | FD369 | G1370 | | | | |
| FLTRU ROAD GLIDE ULTRA | 1450 | 11 | | FD369 | G1370 | 2 | DF835 | CW | | | FD369 | G1370 | | | | |
| FLTRX ROAD GLIDE CUSTOM | 1450 | 10 | | FD369 | G1370 | 2 | DF835 | CW | | | FD369 | G1370 | | | | |
| **SERIE VRSCA / B** | | | | | | | | | | | | | | | | |
| V-ROD (HAYES CALIPER) | 1185 | 02 | 05 | FD235 | G1370 | 2 | DF823 | PW | | | FD235 | G1370 | | | | |
| V-ROD (BREMBO CALIPER) | 1185 | 06 | | FD369 | G1370 | 2 | DF821 | PW | | | FD369 | G1370 | DF822 | CW | | |
| VRSCAW V-ROD | 1185 | 07 | 07 | FD369 | G1370 | 2 | DF821 | PW | | | FD369 | G1370 | DF822 | CW | | |
| VRSCAW V-ROD | 1185 | 08 | | FD369 | G1370 | 2 | | | | | FD369 | G1370 | | | | |
| VRSCD NIGHT ROD | 1185 | 05 | 08 | FD369 | G1370 | 2 | DF821 | PW | | | FD369 | G1370 | DF822 | CW | | |
| VRSCDX NIGHT ROD SPECIAL | 1185 | 07 | | FD369 | G1370 | 2 | DF821 | PW | | | FD369 | G1370 | DF822 | CW | | |
| VRSCF V-ROD MUSCLE | 1185 | 08 | | FD369 | G1370 | 2 | DF821 | PW | | | FD369 | G1370 | DF822 | CW | | |
| VRSCR STREET ROD | 1185 | 05 | 07 | FD369 | G1370 | 2 | DF821 | PW | | | FD369 | G1370 | DF822 | CW | | |
| VRSCX V-ROD | 1185 | 07 | 07 | FD369 | G1370 | 2 | | | | | FD369 | G1370 | DF822 | CW | | |
| VRSCX V-ROD 10th ANNIVERSARY | 1185 | 12 | | FD369 | G1370 | 2 | DF821 | PW | | | FD369 | G1370 | DF822 | CW | | |
| **HIGHLAND** | | | | | | | | | | | | | | | | |
| 950 V2 OUTBACK | 950 | 00 | | FD138 | G1054 | 2 | | | | | FD165 | G1371 | | | | |

OE discs → W FLW CW Special discs → WLL WS RW RWS FLS FRS CRW

| BRAND & MODEL • MARCA Y MODELO<br>MARCA E MODELLO • MARQUE ET MODÉLE | C.C. | YEAR | | FRONT FD MF | FRONT COMPOUND RECOMMENDED | FRONT N° | FRONT DF | FRONT OE | FRONT UPGRADE 1 | FRONT UPGRADE 2 | REAR FD MF | REAR COMPOUND RECOMMENDED | REAR DF | REAR OE | REAR UPGRADE | KITS KG |
|---|---|---|---|---|---|---|---|---|---|---|---|---|---|---|---|---|
| 950 V2 MOTARD | 950 | 00 | | FD138 | G1054 | 2 | | | | | FD165 | G1371 | | | | |
| **HONDA** | | | | | | | | | | | | | | | | |
| @ 150 | 150 | 00 | | FD284 | G1054 | 1 | DF071 | W | WS | | MF051 | G2165 | - | | | KG071 |
| CBF 150 | 150 | 04 | | FD444 | G1054 | 1 | | | | | MF | | - | | | |
| DYLAN 150 | 150 | 02 | | FD284 | G1054 | 1 | DF071 | W | WS | | MF051 | G2165 | - | | | KG071 |
| PANTHEON 150 | 150 | 98 | 02 | FD207 | G1054 | 1 | DF007 | W | | | MF044 | G2165 | - | | | |
| PANTHEON 150 | 150 | 03 | | FD207 | G1054 | 1 | DF007 | W | | | FD103 | G1054 | DF013 | W | | |
| PCX 150 | 150 | 13 | | FD439 | G1054 | 1 | DF078 | W | | | MF051 | G2165 | - | | | KG078 |
| PS 150i | 150 | 06 | | FD284 | G1054 | 1 | DF071 | W | WS | | MF051 | G2165 | - | | | KG071 |
| S WING 150 | 150 | 07 | | FD344 | G1054 | 1 | | | | | FD345 | G1054 | | | | |
| SH 150 SCOOPY | 150 | 01 | 04 | FD284 | G1054 | 1 | DF071 | W | WS | | MF051 | G2165 | - | | | KG071 |
| SH 150 i SCOOPY | 150 | 05 | | FD284 | G1054 | 1 | DF071 | W | WS | | MF051 | G2165 | - | | | KG071 |
| SH 150 i SCOOPY (D-D) | 150 | 09 | | FD344 | G1054 | 1 | DF007 | W | WS | | FD345 | G1054 | DF007 | W | | KG007 |
| SH 150 i SCOOPY (TAMBOR TRAS) | 150 | 09 | | FD284 | G1054 | 1 | DF071 | W | WS | | MF051 | G2165 | - | | | KG071 |
| SH 150 i SCOOPY ABS | 150 | 13 | | FD344 | G1054 | 1 | DF007 | W | WS | | FD345 | G1054 | DF007 | W | | KG007 |
| SH 150 i SCOOPY CBS | 150 | 13 | | FD266 | G1054 | 1 | DF007 | W | WS | | FD345 | G1054 | DF007 | W | | |
| XR 230 | 230 | 05 | | FD164 | G1054 | 1 | | | | | FD093 | G1054 | | | | |
| CB 250 | 250 | 92 | | FD266 | G1054 | 1 | | | | | MF006 | G2165 | - | | | |
| CB 250 HORNET | 250 | 96 | | FD148 | G1054 | 1 | DF027 | CW | | | FD103 | G1054 | DF013 | W | | |
| CB 250 TWO FIFTY | 250 | 92 | | FD266 | G1054 | 1 | DF007 | W | | | MF006 | G2165 | - | | | |
| CBF 250 | 250 | 04 | | FD145 | G1054 | 1 | | | | | MF051 | G2165 | - | | | |
| CBF 250 TWISTER | 250 | 04 | | FD444 | G1054 | 1 | | | | | MF051 | G2165 | - | | | |
| CBR 250 R | 250 | 11 | | FD266 | G1054 | 1 | DF079 | CW | | | FD457 | G1054 | DF048 | W | | |
| CBR 250 R C-ABS | 250 | 11 | | FD344 | G1054 | 1 | DF079 | CW | | | FD457 | G1054 | DF048 | W | | |
| CMX REBEL 250 (NISSIN) | 250 | 96 | 97 | FD187 | G1054 | 1 | | | | | MF005 | G2165 | - | | | |
| CMX REBEL 250 (NISSIN) | 250 | 98 | | FD187 | G1054 | 1 | | | | | MF005 | G2165 | - | | | |
| CMX REBEL 250 (GRIMECA) | 250 | 00 | 07 | FD195 | G1054 | 1 | | | | | MF005 | G2165 | - | | | |
| CN 250 | 250 | 93 | | FD054 | G1054 | 1 | DF020 | W | | | MF037 | G2165 | - | | | |
| CN 250 HELIX | 250 | 90 | | FD054 | G1054 | 1 | DF020 | W | | | MF009 | G2165 | - | | | |
| CN 250 SPAZIO | 250 | 91 | | FD054 | G1054 | 1 | DF020 | W | | | MF009 | G2165 | - | | | |
| CRF 250 L | 250 | 12 | | FD164 | G1054 | 1 | | | | | FD093 | G1054 | | | | |
| CRF 250 LD | 250 | 13 | | FD409 | G1054 | 1 | | | | | | | | | | |
| FAZE 250 | 250 | 10 | | FD344 | G1054 | 1 | DF007 | W | | | FD345 | G1054 | DF007 | W | | KG007 |
| FES 250 FORESIGHT | 250 | 97 | 01 | FD207 | G1054 | 1 | DF007 | W | | | MF044 | G2165 | - | | | |
| FES 250 FORESIGHT DD | 250 | 00 | | FD207 | G1054 | 1 | DF007 | W | | | FD103 | G1054 | DF013 | W | | |
| FES 250 FORZA, REFLEX | 250 | 00 | 04 | FD207 | G1054 | 1 | DF007 | W | | | FD103 | G1054 | DF013 | W | | |
| FES 250 FORZA EX | 250 | 05 | | FD344 | G1054 | 1 | DF007 | W | | | FD345 | G1054 | DF007 | W | | KG007 |
| FES 250 FORZA X / Z | 250 | 05 | | FD344 | G1054 | 1 | DF007 | W | | | FD345 | G1054 | DF007 | W | | KG007 |
| FES 250 JAZZ /ABS | 250 | 00 | 04 | FD207 | G1054 | 1 | DF007 | W | | | FD103 | G1054 | DF013 | W | | |
| FUSION | 250 | 90 | | FD284 | G1054 | 1 | | | | | MF | | - | | | |
| GB 250 CLUB MAN | 250 | 95 | | FD082 | G1054 | 1 | | | | | MF | | - | | | |
| NSF 250 R | 250 | 12 | | FD331 | G1375 | 1 | DF012 | CW | | | FD113 | G1054 | DF019 | W | | |
| NSR 250 R | 250 | 93 | | FD068 | G1054 | 2 | | | | | FD163 | G1054 | | | | |
| NX 250 DOMINATOR | 250 | 97 | | FD164 | G1054 | 1 | | | | | MF | | - | | | |
| PS 250 | 250 | 04 | | FD207 | G1054 | 1 | DF007 | W | | | MF044 | G2165 | - | | | |
| RS 250 R | 250 | 90 | 92 | FD100 | G1054 | 2 | DF027 | CW | | | FD113 | G1054 | DF019 | W | | |
| RS 250 R | 250 | 93 | 96 | FD068 | G1054 | 2 | DF027 | CW | | | FD113 | G1054 | DF026 | | | |
| TSR 250 | 250 | 98 | | FD168 | G1054 | 2 | DF027 | CW | | | FD163 | G1054 | DF064 | W | | |
| VTR 250 | 250 | 98 | 08 | FD140 | G1054 | 1 | DF065 | CW | | | FD103 | G1054 | DF013 | W | | |
| VTR 250 i | 250 | 09 | | FD140 | G1054 | 1 | DF065 | CW | | | FD103 | G1054 | | | | |
| VTR 250 F | 250 | 13 | | FD140 | G1054 | 1 | DF065 | CW | | | FD103 | G1054 | | | | |
| VTZ 250 XELVIS | 250 | 97 | | FD266 | G1054 | 1 | | | | | FD103 | G1054 | DF013 | W | | |
| V-TWIN MAGNA | 250 | 97 | | FD266 | G1054 | 1 | DF022 | W | | | MF | | - | | | |
| XL 250 R | 250 | 90 | | FD092 | G1054 | 1 | DF017 | W | | | FD093 | G1054 | DF010 | W | | |
| NSS 300 FORZA | 300 | 13 | | FD344 | G1054 | 1 | DF007 | W | | | FD345 | G1380 | DF007 | W | | KG007 |
| SH SCOOPY 300 | 300 | 07 | 10 | FD344 | G1054 | 1 | DF083 | W | | | FD345 | G1380 | DF083 | W | | KG083 |
| SH SCOOPY 300 | 300 | 11 | | FD344 | G1054 | 1 | DF083 | W | | | FD345 | G1380 | DF083 | W | | KG083 |
| SH SCOOPY 300 ABS | 300 | 07 | | FD344 | G1054 | 1 | DF083 | W | | | FD345 | G1380 | DF083 | W | | KG083 |
| CB 300 R | 300 | 09 | | FD145 | G1054 | 1 | | | | | MF | | - | | | |
| CB 300 R ABS | 300 | 10 | | FD344 | G1054 | 1 | | | | | FD134 | G1054 | DF007 | W | | |
| CBR 300 R ABS | 300 | 14 | | FD266 | G1054 | 1 | DF079 | CW | | | FD457 | G1054 | DF048 | W | | |
| XRE 300 | 300 | 09 | | FD164 | G1054 | 1 | DF004 | W | | | FD093 | G1054 | DF048 | W | | |
| XRE 300 C-ABS | 300 | 10 | | FD344 | G1054 | 1 | DF004 | W | | | FD093 | G1054 | DF048 | W | | |
| CB 400 FOUR | 400 | 97 | 00 | FD266 | G1054 | 1 | DF059 | CW | | | FD103 | G1054 | DF007 | W | | |
| CB 400 SB | 400 | 05 | | FD219 | G1054 | 2 | DF059 | CW | | | FD134 | G1054 | DF007 | W | | |
| CB 400 SUPER BOL D'OR | 400 | 05 | | FD219 | G1054 | 2 | DF059 | CW | | | FD134 | G1054 | DF007 | W | | |
| CB 400 SUPER FOUR | 400 | 05 | | FD219 | G1054 | 2 | DF059 | CW | | | FD134 | G1054 | DF007 | W | | |
| CB 400 SF | 400 | 02 | 04 | FD219 | G1054 | 2 | DF059 | CW | | | FD267 | G1054 | DF007 | W | | |
| CB 400 SS | 400 | 01 | | FD266 | G1054 | 1 | | | | | MF | | - | | | |
| CBR 400 RR | 400 | 98 | | FD266 | G1054 | 2 | DF027 | CW | | | FD134 | G1054 | DF013 | W | | |
| FJS 400 SILVER WING | 400 | 06 | | FD207 | G1054 | 1 | DF005 | W | | | FD140 | G1054 | DF007 | W | | |
| NX 4 DOMINATOR | 400 | 99 | 02 | FD164 | G1054 | 1 | DF004 | W | | | FD093 | G1054 | DF010 | W | | |
| NX 4 FALCON | 400 | 03 | | FD164 | G1054 | 1 | DF083 | W | | | FD093 | G1054 | DF048 | W | | |



**OE:** Original equipment (original replacement disc) • **OE:** Equipo original (disco de remplazo del original) For other models years previous to 1990 visit **www.galferonline.es** • Para otros modelos anteriores al año 1990 visitar **www.galferonline.es**
For consult TÜV (ABE) type approvals visit **www.galfermoto.com --> DOWNALOAD --> TÜV CERTIFICATIONS** • Para consultar las homologaciones TÜV (ABE) visitar **www.galfermoto.com --> DESCARGAS --> CERTIFICACIONES TÜV**

| BRAND & MODEL • MARCA Y MODELO<br>MARCA E MODELLO • MARQUE ET MODÉLE | C.C. | YEAR | | FRONT FD MF | FRONT COMPOUND RECOMMENDED | FRONT N° | FRONT DF | FRONT OE | FRONT UPGRADE 1 | FRONT UPGRADE 2 | REAR FD MF | REAR COMPOUND RECOMMENDED | REAR DF | REAR OE | REAR UPGRADE | KITS KG |
|---|---|---|---|---|---|---|---|---|---|---|---|---|---|---|---|---|
| SILVER WING 400 | 400 | 02 | 08 | FD207 | G1054 | 1 | DF083 | W | | | FD140 | G1054 | DF007 | W | | |
| SILVER WING T 400 | 400 | 09 | | FD344 | G1054 | 1 | DF005 | W | | | FD140 | G1054 | DF007 | W | | |
| VT 400 SHADOW | 400 | 97 | 01 | FD266 | G1054 | 1 | | | | | MF | | - | | | |
| VT 400 SHADOW SLASHER | 400 | 02 | | FD266 | G1054 | 1 | | | | | MF | | - | | | |
| CB 500 | 500 | 95 | 96 | FD266 | G1054 | 1 | DF009 | W | | | MF035 | G2165 | - | | | |
| CB 500 | 500 | 97 | 97 | FD172 | G1054 | 1 | DF009 | W | | | FD165 | G1054 | | | | |
| CB 500 F | 500 | 13 | | FD266 | G1054 | 1 | DF080 | W | | | FD103 | G1054 | DF081 | W | | |
| CB 500 F ABS | 500 | 13 | | FD266 | G1054 | 1 | DF080 | W | | | FD103 | G1054 | DF081 | W | | |
| CB 500 S | 500 | 98 | | FD172 | G1054 | 1 | DF009 | W | | | FD165 | G1054 | | | | |
| CB 500 X | 500 | 13 | | FD266 | G1054 | 1 | DF080 | W | | | FD103 | G1054 | DF081 | W | | |
| CB 500 X ABS | 500 | 13 | | FD266 | G1054 | 1 | DF080 | W | | | FD103 | G1054 | DF081 | W | | |
| CBF 500 ABS | 500 | 04 | | FD344 | G1054 | 1 | DF009 | W | | | FD134 | G1054 | DF072 | W | | |
| CBF 500 N | 500 | 04 | | FD140 | G1054 | 1 | DF009 | W | | | FD134 | G1054 | DF072 | W | | |
| CBR 500 R | 500 | 13 | | FD266 | G1054 | 1 | DF080 | W | | | FD103 | G1054 | DF081 | W | | |
| CBR 500 R ABS | 500 | 13 | | FD266 | G1054 | 1 | DF080 | W | | | FD103 | G1054 | DF081 | W | | |
| 599 (USA) | 600 | 00 | 06 | FD266 | G1054 | 2 | DF061 | CW | | | FD134 | G1054 | DF013 | W | | |
| 599 (USA) | 600 | 07 | | FD266 | G1054 | 2 | DF062 | CW | | | FD363 | G1054 | DF072 | W | | |
| 599 (USA) ABS | 600 | 07 | | FD344 | G1054 | 2 | DF062 | CW | | | FD134 | G1054 | DF072 | W | | |
| CB 600 HORNET | 600 | 98 | 99 | FD266 | G1054 | 2 | DF059 | CW | | | FD134 | G1054 | DF013 | W | | |
| CB 600 HORNET /S | 600 | 00 | 06 | FD266 | G1054 | 2 | DF061 | CW | | | FD134 | G1054 | DF013 | W | | |
| CB 600 HORNET | 600 | 07 | | FD266 | G1054 | 2 | DF062 | CW | | | FD363 | G1054 | DF072 | W | | |
| CB 600 HORNET ABS | 600 | 07 | | FD344 | G1054 | 2 | DF062 | CW | | | FD134 | G1054 | DF072 | W | | |
| CBF 600 /S | 600 | 04 | 07 | FD266 | G1054 | 2 | DF009 | W | | | FD134 | G1054 | DF072 | W | | |
| CBF 600 /S | 600 | 08 | | FD266 | G1054 | 2 | | | | | FD134 | G1054 | DF072 | W | | |
| CBF 600 S ABS | 600 | 08 | | FD344 | G1054 | 2 | | | | | FD134 | G1054 | DF072 | W | | |
| CBR 600 F2 | 600 | 91 | 94 | FD096 | G1054 | 2 | DF005 | W | | | FD134 | G1054 | DF013 | W | | |
| CBR 600 F3 | 600 | 95 | 98 | FD266 | G1054 | 2 | DF027 | CW | | | FD134 | G1054 | DF013 | W | | |
| CBR 600 F4 | 600 | 99 | 00 | FD219 | G1054 | 2 | DF676 | CW | | | FD134 | G1054 | DF013 | W | | |
| CBR 600 F4 i SPORT | 600 | 01 | 10 | FD219 | G1054 | 2 | DF063 | CW | | | FD134 | G1054 | DF013 | W | | |
| CBR 600 F | 600 | 11 | | FD266 | G1370 | 2 | DF062 | CW | | | FD363 | G1054 | DF007 | W | | |
| CBR 600 F ABS | 600 | 11 | | FD344 | G1370 | 2 | DF062 | CW | | | FD363 | G1054 | DF007 | W | | |
| CBR 600 RR | 600 | 03 | 04 | FD219 | G1054 | 2 | DF070 | CW | CRW | | FD134 | G1054 | DF013 | W | | |
| CBR 600 RR | 600 | 05 | 06 | FD326 | G1054 | 2 | DF070 | CW | CRW | | FD134 | G1054 | DF013 | W | | |
| CBR 600 RR | 600 | 07 | | FD326 | G1375 | 2 | DF070 | CW | CRW | | FD363 | G1371 | DF013 | W | | |
| CBR 600 RR | 600 | 09 | | FD326 | G1375 | 2 | DF070 | CW | CRW | | FD363 | G1371 | DF013 | W | | |
| CBR 600 RR C-ABS | 600 | 09 | 12 | FD326 | G1375 | 2 | DF070 | CW | CRW | | FD363 | G1371 | DF013 | W | | |
| CBR 600 RR C-ABS | 600 | 13 | | FD326 | G1375 | 2 | DF070 | CW | CRW | | FD363 | G1371 | DF013 | W | | |
| FJS 600 SILVER WING | 600 | 01 | | FD207 | G1380 | 1 | DF083 | W | | | FD140 | G1054 | DF007 | W | | |
| FJS 600 SILVER WING ABS | 600 | 03 | | FD207 | G1380 | 1 | DF005 | W | | | FD140 | G1054 | DF007 | W | | |
| SW-T 600 | 600 | 11 | | FD344 | G1380 | 1 | DF005 | W | | | FD140 | G1054 | DF007 | W | | |
| VT 600 SHADOW | 600 | 06 | | FD266 | G1054 | 1 | | | | | MF035 | G2165 | - | | | |
| VT 600 CD SHADOW VLX | 600 | 94 | | FD266 | G1054 | 1 | | | | | MF035 | G2165 | - | | | |
| XL 600 V TRANSALP | 600 | 91 | 93 | FD082 | G1054 | 1 | DF031 | W | | | FD103 | G1054 | DF007 | W | | |
| XL 600 V TRANSALP | 600 | 94 | 96 | FD140 | G1054 | 1 | DF031 | W | | | FD103 | G1054 | DF007 | W | | |
| XL 600 V TRANSALP IZQ. | 600 | 97 | 99 | FD164 | G1054 | 1 | DF004 | W | | | | | | | | |
| XL 600 V TRANSALP DER. | 600 | 97 | 99 | FD164 | G1054 | 1 | DF073 | W | | | FD103 | G1054 | DF007 | W | | |
| CB 650 F ABS | 650 | 14 | | FD266 | G1054 | 2 | DF080 | W | | | FD103 | G1054 | DF081 | W | | |
| CBR 650 F ABS | 650 | 14 | | FD266 | G1054 | 2 | DF080 | W | | | FD103 | G1054 | DF081 | W | | |
| FMX 650 | 650 | 05 | | FD266 | G1054 | 1 | | | | | FD103 | G1054 | DF010 | W | | |
| NTV 650 DEAUVILLE | 650 | 98 | 01 | FD172 | G1054 | 2 | DF009 | W | | | FD103 | G1054 | DF040 | W | | |
| NTV 650 V DEAUVILLE | 650 | 02 | | FD205 | G1054 | 2 | DF009 | W | | | FD207 | G1054 | DF040 | W | | |
| NTV 650 REVERE | 650 | 91 | | FD266 | G1054 | 1 | DF022 | W | | | FD103 | G1054 | | | | |
| NX 650 DOMINATOR | 650 | 93 | 96 | FD082 | G1054 | 1 | DF004 | W | | | FD103 | G1054 | DF010 | W | | |
| NX 650 DOMINATOR | 650 | 97 | | FD172 | G1054 | 1 | DF004 | W | | | FD165 | G1054 | DF010 | W | | |
| SLR 650 | 650 | 96 | | FD172 | G1054 | 1 | DF031 | W | | | FD165 | G1054 | DF010 | W | | |
| VIGOR 650 | 650 | 99 | | FD172 | G1054 | 1 | DF005 | W | | | FD165 | G1054 | DF010 | W | | |
| XL 650 V TRANSALP IZQ. | 650 | 00 | | FD164 | G1054 | 1 | DF004 | W | | | | | | | | |
| XL 650 V TRANSALP DER. | 650 | 00 | | FD164 | G1054 | 1 | DF073 | W | | | FD103 | G1054 | DF007 | W | | |
| XR 650 L | 650 | 93 | | FD164 | G1054 | 1 | DF017 | W | | | FD093 | G1054 | DF048 | W | | |
| DN - 01 | 680 | 08 | 09 | FD344 | G1054 | 2 | | | | | FD140 | G1054 | | | | |
| DN - 01 CONCEPT | 680 | 10 | | FD344 | G1054 | 2 | | | | | FD140 | G1054 | | | | |
| CTX 700 | 700 | 13 | | FD266 | G1054 | 1 | | | | | FD103 | G1054 | | | | |
| CTX 700 ABS | 700 | 13 | | FD266 | G1054 | 1 | | | | | FD103 | G1054 | | | | |
| CTX 700 N | 700 | 13 | | FD266 | G1054 | 1 | | | | | FD103 | G1054 | | | | |
| CTX 700 N ABS | 700 | 13 | | FD266 | G1054 | 1 | | | | | FD103 | G1054 | | | | |
| INTEGRA | 700 | 12 | | FD344 | G1380 | 1 | DF074 | W | | | FD134 | G1371 | DF075 | W | | |
| NC 700 S | 700 | 12 | | FD266 | G1054 | 1 | DF074 | W | | | FD134 | G1054 | DF075 | W | | |
| NC 700 S ABS | 700 | 12 | | FD344 | G1054 | 1 | DF074 | W | | | FD134 | G1054 | DF075 | W | | |
| NC 700 X | 700 | 12 | | FD266 | G1054 | 1 | DF074 | W | | | FD134 | G1054 | DF075 | W | | |
| NC 700 X ABS | 700 | 12 | | FD344 | G1054 | 1 | DF074 | W | | | FD134 | G1054 | DF075 | W | | |
| NTV 700 V DEAUVILLE | 700 | 06 | | FD344 | G1054 | 2 | DF009 | W | | | FD207 | G1054 | DF040 | W | | |
| XL 700 V TRANSALP IZQ. | 700 | 08 | | FD164 | G1054 | 1 | DF004 | W | | | | | | | | |
| XL 700 V TRANSALP DER. | 700 | 08 | | FD164 | G1054 | 1 | DF073 | W | | | FD103 | G1054 | DF007 | W | | |

| BRAND & MODEL • MARCA Y MODELO<br>MARCA E MODELLO • MARQUE ET MODÉLE | C.C. | YEAR | | FRONT FD MF | FRONT COMPOUND RECOMMENDED | FRONT N° | FRONT DF | FRONT OE | FRONT UPGRADE 1 | FRONT UPGRADE 2 | REAR FD MF | REAR COMPOUND RECOMMENDED | REAR DF | REAR OE | REAR UPGRADE | KITS KG |
|---|---|---|---|---|---|---|---|---|---|---|---|---|---|---|---|---|
| XL 700 V TRANSALP IZQ. ABS | 700 | 08 | | FD344 | G1054 | 1 | DF004 | W | | | | | | | | |
| XL 700 V TRANSALP DER. ABS | 700 | 08 | | FD344 | G1054 | 1 | DF073 | W | | | FD134 | G1054 | DF007 | W | | |
| CB 750 NIGHTHAWK | 750 | 91 | | FD140 | G1054 | 1 | | | | | MF | | - | | | |
| CB 750 SEVEN FIFTY | 750 | 92 | | FD266 | G1054 | 2 | DF009 | W | | | FD134 | G1054 | DF007 | W | | |
| INTEGRA | 750 | 14 | | FD266 | G1380 | 1 | DF074 | W | | | FD134 | G1371 | DF075 | W | | |
| NC 750 S | 750 | 14 | | FD266 | G1054 | 1 | DF074 | W | | | FD134 | G1054 | DF075 | W | | |
| NC 750 S ABS | 750 | 14 | | FD266 | G1054 | 1 | DF074 | W | | | FD134 | G1054 | DF075 | W | | |
| NC 750 X | 750 | 14 | | FD266 | G1054 | 1 | DF074 | W | | | FD134 | G1054 | DF075 | W | | |
| NC 750 X ABS | 750 | 14 | | FD266 | G1054 | 1 | DF074 | W | | | FD134 | G1054 | DF075 | W | | |
| NM4-VULTUS | 750 | 15 | | FD266 | G1380 | 1 | DF074 | W | | | FD134 | G1371 | DF075 | W | | |
| NXR 750 AFRICA TWIN | 750 | 91 | | FD082 | G1054 | 2 | | | | | FD103 | G1054 | | | | |
| RVF 750 RR (RC45) | 750 | 94 | | FD148 | G1375 | 2 | DF042 | CW | | | FD110 | G1054 | | | | |
| VF 750 C MAGNA | 750 | 95 | | FD266 | G1054 | 1 | DF032 | W | | | MF043 | G2165 | - | | | |
| VFR 750 F | 750 | 90 | 93 | FD266 | G1054 | 2 | DF009 | W | | | FD140 | G1054 | DF029 | W | | |
| VFR 750 F | 750 | 94 | 97 | FD266 | G1054 | 2 | DF027 | CW | | | FD140 | G1054 | DF029 | W | | |
| VT 750 C SHADOW | 750 | 97 | | FD140 | G1054 | 1 | DF009 | W | | | MF | | - | | | |
| VT 750 C2 SHADOW BLACK | 750 | 10 | | FD140 | G1054 | 1 | DF009 | W | | | MF | | - | | | |
| VT 750 DC BLACK WIDOW | 750 | 02 | | FD140 | G1054 | 1 | DF009 | W | | | MF | | - | | | |
| VT 750 DC SPIRIT | 750 | 07 | | FD140 | G1054 | 1 | DF009 | W | | | MF | | - | | | |
| XRV 750 AFRICA TWIN | 750 | 90 | 93 | FD096 | G1054 | 2 | DF021 | W | | | FD103 | G1054 | DF049 | W | | |
| XRV 750 AFRICA TWIN | 750 | 94 | | FD164 | G1054 | 2 | DF021 | W | | | FD103 | G1054 | DF049 | W | | |
| CROSSRUNNER X | 800 | 11 | 14 | FD344 | G1370 | 2 | DF676 | CW | | | FD443 | G1371 | | | | |
| CROSSRUNNER X | 800 | 15 | | FD326 | G1370 | 2 | | | | | FD443 | G1371 | | | | |
| VFR 800 | 800 | 98 | 00 | FD205 | G1054 | 2 | DF676 | CW | | | FD207 | G1054 | DF029 | W | | |
| VFR 800 Vtec (INTERCEPTOR USA) | 800 | 01 | 05 | FD205 | G1054 | 2 | DF676 | CW | | | FD207 | G1054 | DF029 | W | | |
| VFR 800 | 800 | 06 | | FD344 | G1370 | 2 | DF676 | CW | | | FD207 | G1370 | | | | |
| VFR 800 ABS | 800 | 06 | 13 | FD344 | G1370 | 2 | DF676 | CW | | | FD207 | G1370 | | | | |
| VFR 800 ABS | 800 | 14 | | FD326 | G1370 | 2 | DF070 | CW | CRW | | FD443 | G1371 | | | | |
| 919 (USA) | 900 | 01 | | FD148 | G1054 | 2 | DF063 | CW | | | FD134 | G1054 | DF007 | W | | |
| CB 900 SF HORNET | 900 | 01 | | FD148 | G1054 | 2 | DF063 | CW | | | FD134 | G1054 | DF007 | W | | |
| CBR 900 RR | 900 | 92 | 92 | FD148 | G1054 | 2 | DF676 | CW | | | FD134 | G1054 | DF013 | W | | |
| CBR 900 RR | 900 | 93 | 97 | FD148 | G1054 | 2 | DF027 | CW | | | FD134 | G1054 | DF013 | W | | |
| CBR 900 RR | 900 | 98 | 99 | FD219 | G1054 | 2 | DF041 | CW | | | FD134 | G1054 | DF013 | W | | |
| CBR 900 RR (929) | 929 | 00 | 01 | FD219 | G1054 | 2 | DF066 | CW | CRW | | FD134 | G1054 | DF013 | W | | |
| CBR 900 RR (954) | 954 | 02 | | FD219 | G1054 | 2 | DF066 | CW | CRW | | FD134 | G1054 | DF013 | W | | |
| CB 1000 BIG ONE | 1000 | 93 | | FD148 | G1054 | 2 | DF692 | CW | | | FD134 | G1054 | DF040 | W | | |
| CB 1000 SF | 1000 | 93 | | FD266 | G1054 | 2 | DF692 | CW | | | FD140 | G1054 | DF040 | W | | |
| CB 1000 R | 1000 | 08 | | FD326 | G1370 | 2 | DF070 | CW | CRW | | FD443 | G1371 | | | | |
| CB 1000 R ABS | 1000 | 08 | | FD344 | G1370 | 2 | DF070 | CW | CRW | | FD443 | G1371 | | | | |
| CBF 1000 | 1000 | 06 | | FD266 | G1370 | 2 | DF079 | CW | | | FD134 | G1371 | DF072 | W | | |
| CBF 1000 ABS | 1000 | 06 | | FD344 | G1054 | 2 | DF079 | CW | | | FD134 | G1054 | DF072 | W | | |
| CBR 1000 F DUAL | 1000 | 93 | 99 | FD155 | G1054 | 2 | DF009 | W | | | FD155 | G1054 | DF028 | W | | |
| CBR 1000 RR FIREBLADE | 1000 | 04 | 05 | FD326 | G1054 | 2 | DF070 | CW | CRW | | FD134 | G1371 | DF013 | W | | |
| CBR 1000 RR FIREBLADE | 1000 | 06 | 07 | FD326 | G1370 | 2 | DF068 | CW | CRW | | FD363 | G1371 | DF013 | W | | |
| CBR 1000 RR FIREBLADE | 1000 | 08 | | FD326 | G1375 | 2 | DF076 | CW | CRW | | FD363 | G1371 | DF013 | W | | |
| CBR 1000 RR FIREBLADE C-ABS | 1000 | 09 | | FD326 | G1375 | 2 | DF076 | CW | CRW | | FD363 | G1371 | DF013 | W | | |
| CBR 1000 RR FIREBLADE SP | 1000 | 14 | 14 | FD373 | G1375 | 2 | DF076 | CW | CRW | | FD363 | G1371 | DF013 | W | | |
| CBR 1000 RR FIREBLADE SP | 1000 | 15 | | FD475 | G1375 | 2 | DF076 | CW | CRW | | FD363 | G1371 | DF013 | W | | |
| RC 213 V | 1000 | 15 | | FD373 | G1375 | 2 | | | | | FD220 | G1371 | | | | |
| VARADERO | 1000 | 99 | 02 | FD205 | G1054 | 2 | DF676 | CW | | | FD207 | G1054 | DF049 | W | | |
| VARADERO | 1000 | 03 | | FD205 | G1054 | 2 | DF676 | CW | | | FD207 | G1054 | DF028 | W | | |
| VARADERO ABS | 1000 | 04 | | FD344 | G1054 | 2 | DF676 | CW | | | FD207 | G1054 | DF028 | W | | |
| VTR 1000 F FIRESTORM | 1000 | 97 | 99 | FD148 | G1054 | 2 | DF027 | CW | | | FD134 | G1054 | DF013 | W | | |
| VTR 1000 F SUPER HAWK 996 (USA) | 1000 | 97 | 99 | FD148 | G1054 | 2 | DF027 | CW | | | FD134 | G1054 | DF013 | W | | |
| VTR 1000 SP-1 | 1000 | 00 | 01 | FD219 | G1054 | 2 | DF068 | CW | CRW | | FD134 | G1054 | DF013 | W | | |
| VTR 1000 SP-1 KIT | 1000 | 00 | 01 | FD168 | G1375 | 2 | DF068 | CW | CRW | | FD163 | G1054 | | | | |
| VTR 1000 SP-2 | 1000 | 02 | | FD219 | G1054 | 2 | DF068 | CW | CRW | | FD134 | G1054 | DF013 | W | | |
| RVT 1000 RC 51 (USA) | 1000 | 02 | | FD219 | G1375 | 2 | DF068 | CW | CRW | | FD134 | G1371 | DF013 | W | | |
| CB 1100 | 1100 | 10 | 12 | FD219 | G1370 | 2 | | | | | FD134 | G1054 | | | | |
| CB 1100 | 1100 | 13 | | FD344 | G1370 | 2 | | | | | FD134 | G1054 | | | | |
| CB 1100 EX | 1100 | 15 | | FD219 | G1370 | 2 | | | | | FD134 | G1054 | | | | |
| CB 1100 X 11 ELEVEN | 1100 | 00 | | FD205 | G1054 | 2 | DF067 | CW | | | FD207 | G1054 | DF028 | W | | |
| CBR 1100 XX SUP.BLACKBIRD | 1100 | 97 | 99 | FD205 | G1054 | 2 | | | | | FD207 | G1054 | DF028 | W | | |
| CBR 1100 XX i SUP.BLACKBIRD | 1100 | 00 | | FD205 | G1054 | 2 | DF067 | CW | | | FD207 | G1054 | DF028 | W | | |
| ST 1100 PAN-EUROPEAN | 1100 | 91 | 95 | FD266 | G1054 | 2 | DF022 | W | | | FD140 | G1054 | DF054 | | | |
| ST 1100 PAN EUROPEAN | 1100 | 96 | 01 | FD205 | G1054 | 2 | DF009 | W | | | FD207 | G1054 | DF054 | | | |
| ST 1100 PAN EUROPEAN CBS/ABS/TCS | 1100 | 96 | 01 | FD205 | G1054 | 2 | DF009 | W | | | FD207 | G1054 | DF054 | | | |
| VT 1100 C SHADOW | 1100 | 94 | 94 | FD140 | G1054 | 1 | DF036 | | | | MF043 | G2165 | - | | | |
| VT 1100 C2 ACE | 1100 | 97 | | FD140 | G1054 | 1 | DF022 | W | | | FD134 | G1054 | DF040 | W | | |
| VT 1100 C2 SHADOW ACE | 1100 | 95 | 96 | FD266 | G1054 | 1 | DF022 | W | | | FD140 | G1054 | DF040 | W | | |
| VFR 1200 FA | 1200 | 10 | 13 | FD442 | G1375 | 2 | DF068 | CW | CRW | | FD443 | G1371 | | | | |
| VFR 1200 FA | 1200 | 14 | | | | 2 | | | | | FD443 | G1371 | | | | |
| VFR 1200 FDA DCT | 1200 | 10 | 13 | FD442 | G1375 | 2 | DF068 | CW | CRW | | FD443 | G1371 | | | | |



**OE:** Original equipment (original replacement disc) • **OE:** Equipo original (disco de remplazo del original) For other models years previous to 1990 visit **www.galferonline.es** • Para otros modelos anteriores al año 1990 visitar **www.galferonline.es**
For consult TÜV (ABE) type approvals visit **www.galfermoto.com --> DOWNALOAD --> TÜV CERTIFICATIONS** • Para consultar las homologaciones TÜV (ABE) visitar **www.galfermoto.com --> DESCARGAS --> CERTIFICACIONES TÜV**

| BRAND & MODEL • MARCA Y MODELO / MARCA E MODELLO • MARQUE ET MODÉLE | C.C. | YEAR | | FRONT FD MF | FRONT COMPOUND RECOMMENDED | FRONT N° | FRONT DF | FRONT OE | FRONT UPGRADE 1 | FRONT UPGRADE 2 | REAR FD MF | REAR COMPOUND RECOMMENDED | REAR DF | REAR OE | REAR UPGRADE | KITS KG |
|---|---|---|---|---|---|---|---|---|---|---|---|---|---|---|---|---|
| VFR 1200 FDA DCT | 1200 | 14 | | | | 2 | | | | | FD443 | G1371 | | | | |
| VFR 1200 X CROSSTOURER | 1200 | 12 | | FD344 | G1370 | 2 | | | | | FD344 | G1370 | | | | |
| VFR 1200 X CROSSTOURER DCT | 1200 | 12 | | FD344 | G1370 | 2 | | | | | FD344 | G1370 | | | | |
| VT 1200 MAGNA | 1200 | 95 | | FD266 | G1054 | 2 | | | | | FD140 | G1054 | | | | |
| CB 1300 | 1300 | 92 | 97 | FD148 | G1054 | 2 | | | | | FD134 | G1054 | | | | |
| CB 1300 | 1300 | 98 | 00 | FD193 | G1054 | 2 | | | | | FD267 | G1054 | | | | |
| CB 1300 | 1300 | 01 | 02 | FD219 | G1375 | 2 | DF067 | CW | | | FD267 | G1371 | | | | |
| CB 1300 | 1300 | 03 | 04 | FD219 | G1375 | 2 | DF070 | CW | CRW | | FD134 | G1371 | DF028 | W | | |
| CB 1300 F | 1300 | 10 | | FD344 | G1370 | 2 | DF070 | CW | CRW | | FD134 | G1371 | DF028 | W | | |
| CB 1300 S | 1300 | 05 | 09 | FD219 | G1375 | 2 | DF070 | CW | CRW | | FD134 | G1371 | DF028 | W | | |
| CB 1300 S | 1300 | 10 | | FD344 | G1370 | 2 | | | | | FD134 | G1371 | | | | |
| CB 1300 SUPER BOL D'OR / ABS | 1300 | 05 | | FD219 | G1375 | 2 | DF070 | CW | CRW | | FD134 | G1371 | DF028 | W | | |
| CB 1300 SUPER FOUR / ABS | 1300 | 05 | | FD219 | G1375 | 2 | DF070 | CW | CRW | | FD134 | G1371 | DF028 | W | | |
| CTX 1300 C ABS | 1300 | 14 | | FD344 | G1370 | 2 | DF070 | CW | CRW | | FD207 | G1370 | | | | |
| ST 1300 PAN-EUROPEAN | 1300 | 02 | 07 | FD205 | G1054 | 2 | DF909 | CW | | | FD207 | G1054 | DF910 | W | | |
| ST 1300 PAN-EUROPEAN ABS | 1300 | 08 | | FD344 | G1370 | 2 | DF909 | CW | | | FD207 | G1370 | DF910 | W | | |
| VT 1300 CS | 1300 | 10 | | FD140 | G1054 | 1 | | | | | FD134 | G1371 | | | | |
| VT 1300 CS ABS | 1300 | 10 | | FD344 | G1370 | 1 | | | | | FD205 | G1054 | | | | |
| VT 1300 CX | 1300 | 10 | | FD140 | G1054 | 1 | | | | | FD134 | G1371 | | | | |
| VT 1300 CX ABS | 1300 | 10 | | FD344 | G1370 | 1 | | | | | FD205 | G1054 | | | | |
| VTX 1300 S/C RETRO | 1300 | 03 | | FD266 | G1375 | 1 | | | | | FD134 | G1371 | | | | |
| X-4 LOW DOWN | 1300 | 00 | | FD148 | G1375 | 2 | | | | | FD267 | G1371 | DF040 | W | | |
| F6C 1500 VALKYRIA | 1500 | 97 | | FD266 | G1054 | 2 | DF676 | CW | | | FD140 | G1054 | DF054 | | | |
| GL 1500 SE GOLD WING | 1500 | 91 | | FD082 | G1054 | 2 | DF053 | | | | FD054 | G1054 | DF054 | | | |
| GL 1800 GOLD WING | 1800 | 01 | 05 | FD205 | G1375 | 2 | DF676 | CW | | | FD207 | G1370 | | | | |
| GL 1800 GOLD WING | 1800 | 06 | | FD205 | G1375 | 2 | DF676 | CW | | | FD207 | G1370 | | | | |
| GL 1800 GOLD WING 12YM | 1800 | 12 | | FD344 | G1370 | 2 | DF676 | CW | | | FD344 | G1370 | | | | |
| GL 1800 GOLD WING F6B | 1800 | 13 | | FD344 | G1370 | 2 | DF676 | CW | | | FD344 | G1370 | | | | |
| GL 1800 GOLD WING F6 40th | 1800 | 15 | | FD344 | G1370 | 2 | DF676 | CW | | | FD344 | G1370 | | | | |
| NRX 1800 VALKYRIE RUNE | 1800 | 03 | | FD205 | G1054 | 2 | | | | | FD207 | G1370 | | | | |
| VTX 1800 C | 1800 | 01 | | FD205 | G1054 | 2 | DF063 | CW | | | FD207 | G1370 | DF054 | | | |
| VTX 1800 RETRO | 1800 | 03 | | FD205 | G1054 | 2 | DF063 | CW | | | FD207 | G1370 | DF054 | | | |
| RS 500 RACING CALIPER | 500 | | | FD088 | G1054 | | | | | | | | | | | |
| **HONDA BRAZIL** | | | | | | | | | | | | | | | | |
| CBF 150 | 150 | 04 | | FD444 | G1054 | 1 | | | | | MF | | - | | | |
| CG 150 TITAN | 150 | 10 | | FD298 | G1054 | 1 | | | | | MF | | - | | | |
| NXR 150 BROS | 150 | 12 | | FD164 | G1054 | 1 | | | | | MF | | - | | | |
| CBF 250 | 250 | 04 | | FD145 | G1054 | 1 | | | | | MF051 | G2165 | - | | | |
| CBF 250 TWISTER | 250 | 04 | | FD444 | G1054 | 1 | | | | | MF | | - | | | |
| XRE 300 | 300 | 09 | | FD164 | G1054 | 1 | DF004 | W | | | FD093 | G1054 | DF048 | W | | |
| XRE 300 C-ABS | 300 | 10 | | FD344 | G1054 | 1 | DF004 | W | | | FD093 | G1054 | DF048 | W | | |
| CB 300 R | 300 | 09 | | FD145 | G1054 | 1 | | | | | MF | | - | | | |
| CB 300 R ABS | 300 | 10 | | FD344 | G1054 | 1 | | | | | FD134 | G1054 | DF007 | W | | |
| **HONDA INDONESIA** | | | | | | | | | | | | | | | | |
| CB 150 R STREETFIRE | 150 | 11 | | FD298 | G1054 | 1 | | | | | FD259 | G1054 | | | | |
| CBR 150 R | 150 | 11 | | FD298 | G1054 | 1 | | | | | FD103 | G1054 | | | | |
| MEGA PRO CW | 150 | 11 | | FD298 | G1054 | 1 | | | | | FD259 | G1054 | | | | |
| MEGA PRO SW | 150 | 11 | | FD298 | G1054 | 1 | | | | | MF | | - | | | |
| PCX 150 | 150 | 13 | | FD439 | G1054 | 1 | DF078 | W | | | MF051 | G2165 | - | | | KG078 |
| MEGA PRO | 160 | 10 | | FD298 | G1054 | 1 | | | | | MF | | - | | | |
| TIGER DOUBLE | 200 | 11 | | FD298 | G1054 | 1 | | | | | FD259 | G1054 | | | | |
| TIGER SINGLE | 200 | 11 | | FD298 | G1054 | 1 | | | | | FD259 | G1054 | | | | |
| CBR 250 R | 250 | 11 | | FD266 | G1054 | 1 | | | | | FD457 | G1054 | DF048 | W | | |
| CBR 250 R C-ABS | 250 | 11 | | FD344 | G1054 | 1 | | | | | FD457 | G1054 | DF048 | W | | |
| **HONDA MALASIA** | | | | | | | | | | | | | | | | |
| PCX 150 | 150 | 13 | | FD439 | G1054 | 1 | DF078 | W | | | MF051 | G2165 | - | | | KG078 |
| CBR 250 R | 250 | 11 | | FD266 | G1054 | 1 | | | | | FD457 | G1054 | DF048 | W | | |
| CBR 250 R C-ABS | 250 | 11 | | FD344 | G1054 | 1 | | | | | FD103 | G1054 | DF048 | W | | |
| CRF 250 L | 250 | 12 | | FD164 | G1054 | 1 | | | | | FD093 | G1054 | | | | |
| CBR 1000 RR FIREBLADE C-ABS | 1000 | 09 | | FD326 | G1375 | 2 | DF076 | CW | CRW | | FD363 | G1371 | DF013 | W | | |
| GL 1800 GOLD WING F6B | 1800 | 13 | | FD344 | G1370 | 2 | DF676 | CW | | | FD344 | G1370 | | | | |
| **HOREX** | | | | | | | | | | | | | | | | |
| VR6 | 1250 | 12 | | FD176 | G1375 | 2 | | | | | FD220 | G1371 | | | | |
| **HUSABERG** | | | | | | | | | | | | | | | | |
| 570 FS | 570 | 10 | | FD304 | G1054 | 1 | | | | | FD291 | G1054 | DF607 | W | WLL | |
| 650 FS | 650 | 03 | 03 | FD068 | G1054 | 1 | | | | | FD165 | G1054 | DF607 | W | WLL | |
| 650 FS | 650 | 04 | | | | 1 | | | | | FD165 | G1396 | | | | |
| **HUSQVARNA** | | | | | | | | | | | | | | | | |
| 510 SM R | 510 | 05 | 05 | FD262 | G1054 | 1 | DF645 | CW | | | FD165 | G1054 | DF885 | W | PW | |
| 510 SM R | 510 | 06 | | FD262 | G1054 | 1 | DF645 | CW | | | FD291 | G1054 | DF885 | W | PW | |
| SMR 511 | 511 | 11 | | FD262 | G1054 | 1 | | | | | FD291 | G1054 | | | | |
| 530 RR | 530 | 09 | | FD176 | G1054 | 1 | DF645 | CW | | | FD291 | G1054 | | | | |
| 570 SM S | 570 | 01 | | FD176 | G1054 | 1 | DF645 | CW | | | FD165 | G1054 | DF885 | W | PW | |

OE discs → W FLW CW Special discs → WLL WS RW RWS FLS FRS CRW

| BRAND & MODEL • MARCA Y MODELO<br>MARCA E MODELLO • MARQUE ET MODÉLE | C.C. | YEAR | | FRONT FD MF | FRONT COMPOUND RECOMMENDED | FRONT N° | FRONT DF | FRONT OE | FRONT UPGRADE 1 | FRONT UPGRADE 2 | REAR FD MF | REAR COMPOUND RECOMMENDED | REAR DF | REAR OE | REAR UPGRADE | KITS KG |
|---|---|---|---|---|---|---|---|---|---|---|---|---|---|---|---|---|
| 570 SM R | 570 | 01 | | FD068 | G1054 | 1 | DF645 | CW | | | FD165 | G1054 | DF885 | W | PW | |
| NOX | 600 | 01 | | FD068 | G1054 | 1 | DF645 | CW | | | FD165 | G1054 | DF885 | W | PW | |
| 610LT | 610 | 00 | | FD176 | G1054 | 1 | DF645 | CW | | | FD165 | G1054 | DF885 | W | PW | |
| 610 SM S | 610 | 00 | 04 | FD176 | G1054 | 1 | DF645 | CW | | | FD165 | G1054 | DF885 | W | PW | |
| 610 SM R | 610 | 00 | 04 | FD068 | G1054 | 1 | DF645 | CW | | | FD165 | G1054 | DF885 | W | PW | |
| 610 SM R | 610 | 05 | 05 | FD262 | G1054 | 1 | DF645 | CW | | | FD165 | G1054 | DF885 | W | PW | |
| 610 SM R | 610 | 06 | | FD262 | G1054 | 1 | DF645 | CW | | | FD165 | G1054 | DF885 | W | PW | |
| 610 SM ie | 610 | 07 | | FD262 | G1054 | 1 | DF645 | CW | | | FD165 | G1054 | DF885 | W | PW | |
| 630 SM | 630 | 10 | | FD262 | G1054 | 1 | | | | | FD165 | G1054 | | | | |
| 630 SMR | 630 | 06 | | FD068 | G1054 | 1 | DF645 | CW | | | FD291 | G1054 | DF885 | W | PW | |
| 630 SMS | 630 | 11 | | FD262 | G1054 | 1 | | | | | FD165 | G1054 | | | | |
| MOAB | 650 | 12 | | FD172 | G1054 | 1 | | | | | FD165 | G1054 | | | | |
| STR 650 CRC | 650 | 07 | | FD262 | G1054 | 1 | DF645 | CW | | | FD291 | G1054 | DF885 | W | PW | |
| TR 650 STRADA | 650 | 12 | | FD172 | G1054 | 1 | DF663 | FLW | | | FD165 | G1054 | DF703 | W | | |
| TR 650 TERRA | 650 | 12 | | FD172 | G1054 | 1 | DF663 | FLW | | | FD165 | G1054 | DF703 | W | | |
| 701 SUPERMOTO | 701 | 15 | | FD262 | G1054 | 1 | | | | | FD165 | G1054 | | | | |
| NUDA 900 | 900 | 12 | | FD176 | G1054 | 2 | DF707 | W | | | FD165 | G1054 | DF763 | W | | |
| NUDA 900 R | 900 | 11 | | FD373 | G1370 | 2 | DF707 | W | | | FD165 | G1054 | DF763 | W | | |
| **HYOSUNG** | | | | | | | | | | | | | | | | |
| EXCEED 150 | 150 | 03 | | FD153 | G1054 | 1 | | | | | FD117 | G1054 | | | | |
| AQUILA 250 V-TWIN | 250 | 02 | | FD073 | G1054 | 1 | | | | | MF | | - | | | |
| COMET GT 250 | 250 | 02 | | FD073 | G1054 | 1 | | | | | FD073 | G1054 | | | | |
| COMET GT 250 R | 250 | 06 | | FD073 | G1054 | 2 | | | | | FD073 | G1054 | | | | |
| GD 250 N | 250 | 14 | | FD176 | G1054 | 1 | | | | | FD153 | G1054 | | | | |
| GD 250 R | 250 | 14 | | FD176 | G1054 | 1 | | | | | FD153 | G1054 | | | | |
| GT 250 Pi | 250 | 13 | | FD073 | G1054 | 1 | | | | | FD073 | G1054 | | | | |
| GV 250 | 250 | 04 | | FD073 | G1054 | 1 | | | | | MF | | - | | | |
| XRX 400 | 400 | 05 | | FD073 | G1054 | 1 | | | | | FD093 | G1054 | | | | |
| GT 650 / S / R | 650 | 05 | | FD073 | G1054 | 2 | | | | | FD073 | G1054 | | | | |
| GT 650 i | 650 | 09 | 11 | FD176 | G1054 | 2 | | | | | FD073 | G1054 | | | | |
| GT 650 Pi | 650 | 13 | | FD176 | G1054 | 2 | | | | | FD073 | G1054 | | | | |
| GT 650 Ri | 650 | 09 | | FD176 | G1054 | 2 | | | | | FD073 | G1054 | | | | |
| GT 650 X | 650 | 07 | | FD073 | G1054 | 2 | | | | | FD073 | G1054 | | | | |
| GV 650 | 650 | 06 | | FD073 | G1054 | 2 | | | | | FD073 | G1054 | | | | |
| GV 650 AQUILIA | 650 | 04 | | FD073 | G1054 | 2 | | | | | FD295 | G1054 | | | | |
| AQUILA 700 GV i | 700 | 10 | | FD176 | G1054 | 1 | | | | | FD063 | G1054 | | | | |
| ST 7 | 700 | 10 | | FD176 | G1054 | 1 | | | | | FD063 | G1054 | | | | |
| GV 1000 | 1000 | 04 | | FD073 | G1054 | 2 | | | | | FD295 | G1054 | | | | |
| **INDIAN MOTORCYCLE** | | | | | | | | | | | | | | | | |
| SCOUT | 1130 | 15 | | FD266 | G1370 | 1 | | | | | | | | | | |
| CHIEF BLACKHAWK | 1720 | 11 | | FD068 | G1370 | 2 | | | | | FD013 | G1054 | | | | |
| CHIEF BLACKHAWK DARK | 1720 | 11 | | FD068 | G1370 | 2 | | | | | FD013 | G1054 | | | | |
| CHIEF BOMBER | 1720 | 09 | | FD068 | G1370 | 2 | | | | | FD013 | G1054 | | | | |
| CHIEF CLASSIC | 1720 | 09 | | FD068 | G1370 | 2 | | | | | FD013 | G1054 | | | | |
| CHIEF DARK HORSE | 1720 | 09 | | FD068 | G1370 | 2 | | | | | FD013 | G1054 | | | | |
| CHIEF DELUXE | 1720 | 09 | | FD068 | G1370 | 2 | | | | | FD013 | G1054 | | | | |
| CHIEF ROADMASTER | 1720 | 09 | | FD068 | G1370 | 2 | | | | | FD013 | G1054 | | | | |
| CHIEF STANDARD | 1720 | 09 | | FD068 | G1370 | 2 | | | | | FD013 | G1054 | | | | |
| CHIEF VINTAGE | 1720 | 09 | | FD068 | G1370 | 2 | | | | | FD013 | G1054 | | | | |
| ROAD MASTER | 1811 | 15 | | FD068 | G1370 | 2 | | | | | FD013 | G1054 | | | | |
| **ISR** | | | | | | | | | | | | | | | | |
| 6 PISTON RACING CALIPER | | 93 | | FD160 | G1054 | 1 | | | | | | | | | | |
| 6 PISTON RACING CALIPER | | 93 | | FD161 | G1054 | 1 | | | | | | | | | | |
| **ITALJET** | | | | | | | | | | | | | | | | |
| JACK 150 | 150 | 07 | | FD284 | G1054 | 1 | | | | | FD284 | G1054 | | | | |
| JET SET | 150 | 02 | | FD270 | G1054 | 1 | | | | | MF | | - | | | |
| MILLENNIUM 150 | 150 | 00 | 01 | FD075 | G1054 | 1 | | | | | MF | | - | | | |
| MILLENNIUM 150 | 150 | 02 | | FD270 | G1054 | 1 | | | | | MF | | - | | | |
| TORPEDO 150 | 150 | 00 | | FD065 | G1054 | 1 | | | | | MF | | - | | | |
| DRAGSTER | 180 | 00 | | FD065 | G1054 | 1 | DF624 | W | | | FD065 | G1054 | DF625 | W | | |
| DRAGSTER | 250 | 07 | | FD270 | G1054 | 1 | | | | | FD270 | G1054 | | | | |
| JUPITER | 250 | 02 | | FD169 | G1054 | 1 | DF458 | W | | | FD214 | G1054 | DF490 | W | | |
| BAZOOKA | 650 | 06 | | FD073 | G1054 | 2 | | | | | FD073 | G1054 | | | | |
| GRIFON | 650 | 06 | | FD073 | G1054 | 2 | | | | | FD073 | G1054 | | | | |
| GRIFON | 900 | 00 | | FD068 | G1054 | 2 | DF660 | CW | CRW | | FD012 | G1054 | | | | |
| **JINCHENG** | | | | | | | | | | | | | | | | |
| JC 250 6 | 250 | 05 | | FD188 | G1054 | 1 | | | | | MF | | - | | | |
| **KAWASAKI** | | | | | | | | | | | | | | | | |
| EPSILON 150 | 150 | 03 | | FD177 | G1054 | 1 | | | | | MF | | - | | | |
| BJ 250 ESTRELLA RS | 250 | 99 | | FD075 | G1054 | 1 | | | | | FD075 | G1054 | | | | |
| EL 250, E | 250 | 91 | | FD062 | G1054 | 1 | DF166 | | | | MF152 | G2165 | - | | | |
| EPSILON 250 | 250 | 03 | | FD222 | G1054 | 1 | DF341 | W | | | FD400 | G1054 | DF342 | W | | |
| KL 250 SUPER SHERPA | 250 | 00 | | FD204 | G1054 | 1 | | | | | FD075 | G1054 | | | | |

**OE:** Original equipment (original replacement disc) • **OE:** Equipo original (disco de remplazo del original) For other models years previous to 1990 visit **www.galferonline.es** • Para otros modelos anteriores al año 1990 visitar **www.galferonline.es**
For consult TÜV (ABE) type approvals visit **www.galfermoto.com --> DOWNALOAD --> TÜV CERTIFICATIONS** • Para consultar las homologaciones TÜV (ABE) visitar **www.galfermoto.com --> DESCARGAS --> CERTIFICACIONES TÜV**

| BRAND & MODEL • MARCA Y MODELO<br>MARCA E MODELLO • MARQUE ET MODÉLE | C.C. | YEAR | | FRONT FD MF | FRONT COMPOUND RECOMMENDED | FRONT N° | FRONT DF | FRONT OE | FRONT UPGRADE 1 | FRONT UPGRADE 2 | REAR FD MF | REAR COMPOUND RECOMMENDED | REAR DF | REAR OE | REAR UPGRADE | KITS KG |
|---|---|---|---|---|---|---|---|---|---|---|---|---|---|---|---|---|
| KL 250 TR | 250 | 04 | | FD179 | G1054 | 1 | | | | | MF | | - | | | |
| KR-1S 250C2 | 250 | 90 | | FD107 | G1054 | 1 | | | | | FD104 | G1054 | | | | |
| NINJA 250 R | 250 | 08 | 12 | FD117 | G1054 | 1 | DF203 | W | | | FD117 | G1054 | DF204 | W | | |
| Z 250 SL | 250 | 15 | | FD117 | G1054 | 1 | DF205 | CW | | | FD117 | G1054 | DF204 | W | | |
| TR 250 | 250 | 05 | | FD179 | G1054 | 1 | | | | | MF | | - | | | |
| ZR 250 BALIUS II | 250 | 02 | | FD179 | G1054 | 1 | DF167 | CW | | | FD075 | G1054 | | | | |
| ZZR 250 (EX 250 H1) | 250 | 90 | 97 | FD090 | G1054 | 2 | DF167 | CW | | | FD104 | G1054 | | | | |
| ZZR 250 | 250 | 98 | | FD090 | G1054 | 1 | | | | | FD075 | G1054 | | | | |
| VN 250 ELIMINATOR | 250 | 99 | | FD174 | G1054 | 1 | | | | | MF | | - | | | |
| J 300 | 300 | 14 | | FD266 | G1054 | 1 | | | | | FD438 | G1380 | DF307 | W | | |
| J 300 SE | 300 | 14 | | FD266 | G1054 | 1 | | | | | FD438 | G1380 | DF307 | W | | |
| NINJA 300 R | 300 | 13 | | FD117 | G1054 | 1 | DF205 | CW | | | FD117 | G1054 | DF204 | W | | |
| NINJA 300 R SP (ABS) | 300 | 13 | | FD117 | G1054 | 1 | DF205 | CW | | | FD117 | G1054 | DF204 | W | | |
| Z 300 | 300 | 15 | | FD117 | G1054 | 1 | DF205 | CW | | | FD117 | G1054 | DF204 | W | | |
| XANTHUS 400 | 400 | 92 | | FD090 | G1054 | 2 | | | | | FD075 | G1054 | | | | |
| ZEPHYR 400 / X | 400 | 02 | | FD090 | G1054 | 2 | | | | | FD167 | G1054 | | | | |
| ZRX 400 / II | 400 | 01 | | FD272 | G1054 | 2 | DF167 | CW | | | FD167 | G1054 | | | | |
| ZXR 400 | 400 | 90 | 94 | FD141 | G1054 | 2 | DF169 | CW | | | FD111 | G1054 | DF183 | W | | |
| ZXR 400 | 400 | 95 | 98 | FD090 | G1054 | 2 | DF169 | CW | | | FD111 | G1054 | DF183 | W | | |
| ZXR 400 | 400 | 99 | | FD156 | G1054 | 2 | | | | | FD167 | G1054 | | | | |
| ZZR 400 | 400 | 90 | | FD141 | G1054 | 2 | | | | | FD090 | G1054 | | | | |
| EN 500 | 500 | 90 | 93 | FD062 | G1054 | 1 | DF177 | W | | | MF153 | G2165 | - | | | |
| EN 500 VULCAN | 500 | 94 | | FD062 | G1054 | 1 | DF173 | | | | MF153 | G2165 | - | | | |
| ER-5 | 500 | 97 | 00 | FD090 | G1054 | 1 | DF154 | W | | | MF152 | G2165 | - | | | |
| ER-5 | 500 | 01 | | FD174 | G1054 | 1 | DF154 | W | | | MF152 | G1054 | - | | | |
| GPZ 500 S | 500 | 90 | 92 | FD075 | G1054 | 2 | DF159 | W | | | MF152 | G2165 | - | | | |
| GPZ 500 S | 500 | 93 | | FD104 | G1054 | 2 | DF159 | W | | | FD075 | G1054 | | | | |
| KLE 500 | 500 | 91 | | FD090 | G1054 | 1 | DF175 | W | | | FD075 | G1054 | DF157 | W | | |
| ZEPHYR 500 | 500 | 91 | | FD090 | G1054 | 2 | | | | | FD104 | G1054 | | | | |
| ZZR 500 | 500 | 90 | | FD107 | G1054 | 2 | | | | | FD090 | G1054 | | | | |
| ZEPHYR 550 | 550 | 93 | 95 | FD090 | G1054 | 2 | DF167 | CW | | | FD104 | G1054 | DF183 | W | | |
| ZEPHYR 550 | 550 | 96 | | FD090 | G1054 | 2 | DF167 | CW | | | FD167 | G1054 | DF183 | W | | |
| KLR 600S | 600 | 90 | 92 | FD075 | G1054 | 1 | DF153 | | | | MF | | - | | | |
| ZL 600 ELIMINATOR | 600 | 95 | | FD090 | G1054 | 1 | DF167 | CW | | | MF | | - | | | |
| ZX 600 NINJA ZX-6 | 600 | 93 | 94 | FD107 | G1054 | 2 | DF167 | CW | | | FD090 | G1054 | DF188 | W | | |
| ZX-6R | 600 | 95 | 97 | FD107 | G1054 | 2 | DF167 | CW | | | FD167 | G1054 | DF193 | W | | |
| ZX-6R | 600 | 98 | 99 | FD156 | G1054 | 2 | DF178 | CW | | | FD167 | G1054 | DF193 | W | | |
| ZX-6R | 600 | 00 | 02 | FD156 | G1054 | 2 | DF167 | CW | | | FD167 | G1054 | DF193 | W | | |
| ZX-6RR | 600 | 03 | 04 | FD290 | G1054 | 2 | DF180 | CW | | | FD167 | G1054 | DF193 | W | | |
| ZX-6RR | 600 | 05 | 06 | FD290 | G1054 | 2 | DF184 | CW | CRW | | FD167 | G1054 | DF193 | W | | |
| ZX-6R | 600 | 07 | 08 | FD371 | G1054 | 2 | DF184 | CW | CRW | | FD167 | G1054 | DF193 | W | | |
| ZX-6R | 600 | 09 | | FD371 | G1375 | 2 | DF184 | CW | CRW | | FD167 | G1371 | DF193 | W | | |
| ZZR 600 | 600 | 91 | 92 | FD107 | G1054 | 2 | DF167 | CW | | | FD090 | G1054 | DF188 | W | | |
| ZZR 600 | 600 | 93 | | FD107 | G1054 | 2 | DF167 | CW | | | FD167 | G1054 | DF183 | W | | |
| ZZR 600 HAMA | 600 | 90 | | FD107 | G1054 | 2 | DF167 | CW | | | FD090 | G1054 | | | | |
| ZX-6R 636 | 636 | 02 | 02 | FD156 | G1054 | 2 | DF167 | CW | | | FD167 | G1054 | DF193 | W | | |
| ZX-6R 636 | 636 | 03 | 04 | FD290 | G1054 | 2 | DF180 | CW | | | FD167 | G1054 | DF193 | W | | |
| ZX-6R 636 | 636 | 05 | 12 | FD290 | G1375 | 2 | DF184 | CW | CRW | | FD167 | G1371 | DF193 | W | | |
| ZX-6R 636 | 636 | 13 | | FD219 | G1375 | 2 | DF190 | CW | CRW | | FD363 | G1371 | DF193 | WA | | |
| ZX-6R 636 ABS | 636 | 13 | | FD219 | G1375 | 2 | DF190 | CW | CRW | | FD363 | G1371 | DF193 | WA | | |
| ER-6 F / NINJA 650 R (USA) LEFT / IZQ | 650 | 05 | | FD174 | G1054 | 2 | DF184 | CW | CRW | | | | | | | |
| ER-6 F / NINJA 650 R (USA) RIGHT / DER | 650 | 05 | | FD179 | G1054 | 2 | DF184 | CW | CRW | | FD167 | G1054 | DF193 | W | | |
| ER-6 N LEFT / IZQ | 650 | 05 | | FD174 | G1054 | 2 | DF184 | CW | CRW | | | | | | | |
| ER-6 N RIGHT / DER | 650 | 05 | | FD179 | G1054 | 2 | DF184 | CW | CRW | | FD167 | G1054 | DF193 | W | | |
| KLR 650 C1/C2 | 650 | 95 | 07 | FD174 | G1054 | 1 | DF156 | | | | FD075 | G1054 | DF157 | W | | |
| KLR 650 | 650 | 08 | | FD086 | G1054 | 1 | | | | | FD145 | G1054 | | | | |
| VERSYS 650 LEFT /IZQ | 650 | 06 | 07 | FD174 | G1054 | 1 | DF184 | CW | CRW | | | | | | | |
| VERSYS 650 RIGHT / DER | 650 | 06 | 07 | FD179 | G1054 | 1 | DF184 | CW | CRW | | FD167 | G1054 | DF193 | W | | |
| VERSYS 650 LEFT /IZQ | 650 | 08 | 09 | FD174 | G1054 | 1 | DF184 | CW | CRW | | | | | | | |
| VERSYS 650 RIGHT / DER | 650 | 08 | 09 | FD179 | G1054 | 1 | DF184 | CW | CRW | | FD167 | G1054 | DF193 | W | | |
| VERSYS 650 LEFT /IZQ | 650 | 10 | 14 | FD174 | G1054 | 1 | DF184 | CW | CRW | | | | | | | |
| VERSYS 650 RIGHT / DER | 650 | 10 | 14 | FD179 | G1054 | 1 | DF184 | CW | CRW | | FD167 | G1054 | DF193 | W | | |
| VERSYS 650 | 650 | 15 | | FD266 | G1054 | 2 | DF184 | CW | CRW | | FD103 | G1054 | DF191 | W | | |
| VULCAN S | 650 | 15 | | FD339 | G1054 | 1 | | | | | FD340 | G1054 | | | | |
| W 650 | 650 | 99 | | FD179 | G1054 | 1 | | | | | MF | | - | | | |
| VN 750 VULCAN | 750 | 93 | | FD062 | G1054 | 2 | DF166 | | | | MF153 | G2165 | - | | | |
| Z 750 LEFT/IZQ | 750 | 04 | 06 | FD174 | G1054 | 2 | DF167 | CW | | | | | | | | |
| Z 750 RIGHT/DER | 750 | 04 | 06 | FD179 | G1054 | 2 | DF167 | CW | | | FD167 | G1054 | DF193 | W | | |
| Z 750 S LEFT/IZQ | 750 | 05 | 06 | FD174 | G1054 | 2 | DF167 | CW | | | | | | | | |
| Z 750 S RIGHT/DER | 750 | 05 | 06 | FD179 | G1054 | 2 | DF167 | CW | | | FD167 | G1054 | DF193 | W | | |
| Z 750 | 750 | 07 | | FD266 | G1054 | 2 | DF184 | CW | CRW | | FD134 | G1054 | DF191 | W | | |
| Z 750 ABS | 750 | 07 | | FD266 | G1054 | 2 | DF184 | CW | CRW | | FD134 | G1054 | DF191 | W | | |
| Z 750 R | 750 | 11 | | FD371 | G1054 | 2 | DF184 | CW | CRW | | FD103 | G1054 | DF191 | W | | |

| BRAND & MODEL • MARCA Y MODELO<br>MARCA E MODELLO • MARQUE ET MODÉLE | C.C. | YEAR | | FRONT FD MF | FRONT COMPOUND RECOMMENDED | FRONT N° | FRONT DF | FRONT OE | FRONT UPGRADE 1 | FRONT UPGRADE 2 | REAR FD MF | REAR COMPOUND RECOMMENDED | REAR DF | REAR OE | REAR UPGRADE | KITS KG |
|---|---|---|---|---|---|---|---|---|---|---|---|---|---|---|---|---|
| Z 750 R SE | 750 | 12 | | FD371 | G1054 | 2 | DF184 | CW | CRW | | FD103 | G1054 | DF191 | W | | |
| ZEPHYR 750 | 750 | 91 | | FD090 | G1054 | 2 | DF167 | CW | | | FD090 | G1054 | DF188 | W | | |
| ZR-7 S DER./RIGHT | 750 | 99 | 04 | FD179 | G1054 | 2 | DF167 | CW | | | | | | | | |
| ZR-7 S IZQ/LEFT | 750 | 99 | 04 | FD174 | G1054 | 2 | DF167 | CW | | | FD179 | G1054 | | | | |
| ZR-7 S DER./RIGHT | 750 | 05 | | FD179 | G1370 | 2 | DF167 | CW | | | | | | | | |
| ZR-7 S IZQ/LEFT | 750 | 05 | | FD174 | G1370 | 2 | DF167 | CW | | | FD179 | G1054 | | | | |
| ZX 7 RR (ZX750P1) | 750 | 96 | | FD193 | G1375 | 2 | DF168 | CW | CRW | | FD267 | G1054 | DF155 | W | | |
| ZXR 750 R | 750 | 91 | 95 | FD107 | G1054 | 2 | DF168 | CW | CRW | | FD111 | G1054 | DF155 | W | | |
| VN 800 | 800 | 94 | 97 | FD062 | G1054 | 1 | DF173 | | | | FD062 | G1054 | | | | |
| VN 800 CLASSIC | 800 | 98 | | FD174 | G1054 | 1 | DF173 | | | | MF | | - | | | |
| VN 800 DRIFTER | 800 | 99 | | FD174 | G1054 | 1 | | | | | FD179 | G1054 | | | | |
| W 800 | 800 | 11 | | FD179 | G1054 | 1 | DF167 | CW | | | MF | | - | | | |
| Z 800 | 800 | 13 | | FD331 | G1370 | 2 | DF190 | CW | CRW | | FD103 | G1371 | DF191 | W | | |
| Z 800 ABS | 800 | 13 | | FD331 | G1370 | 2 | DF190 | CW | CRW | | FD103 | G1371 | DF191 | W | | |
| Z 800e | 800 | 13 | | FD266 | G1370 | 2 | DF190 | CW | CRW | | FD103 | G1371 | DF191 | W | | |
| Z 800e ABS | 800 | 13 | | FD331 | G1370 | 2 | DF190 | CW | CRW | | FD103 | G1371 | DF191 | W | | |
| GPZ 900 R | 900 | 90 | 96 | FD266 | G1054 | 2 | DF167 | CW | | | FD090 | G1054 | DF159 | W | | |
| VN 900 | 900 | 07 | | FD174 | G1054 | 1 | | | | | FD179 | G1054 | | | | |
| VN 900 CLASIC | 900 | 06 | | FD174 | G1054 | 1 | | | | | FD179 | G1054 | | | | |
| VN 900 CLASIC SPECIAL EDITION | 900 | 11 | | FD174 | G1375 | 1 | | | | | FD179 | G1370 | | | | |
| ZX-9R NINJA | 900 | 94 | 95 | FD107 | G1054 | 2 | DF168 | CW | CRW | | FD167 | G1054 | DF155 | W | | |
| ZX-9R NINJA | 900 | 96 | 97 | FD156 | G1054 | 2 | DF168 | CW | CRW | | FD167 | G1054 | DF155 | W | | |
| ZX-9R NINJA | 900 | 98 | 99 | FD156 | G1054 | 2 | DF178 | CW | | | FD167 | G1054 | DF193 | W | | |
| ZX-9R NINJA | 900 | 00 | 01 | FD156 | G1054 | 2 | DF169 | CW | | | FD167 | G1054 | DF193 | W | | |
| ZX-9R NINJA | 900 | 02 | | FD331 | G1054 | 2 | DF168 | CW | CRW | | FD167 | G1054 | DF193 | W | | |
| GTR 1000 | 1000 | 94 | | FD090 | G1054 | 2 | DF167 | CW | | | FD062 | G1054 | DF154 | W | | |
| KLV 1000 LEFT/IZQ | 1000 | 04 | | FD174 | G1054 | 2 | DF323 | CW | CRW | | | | | | | |
| KLV 1000 RIGHT/DER | 1000 | 04 | | FD179 | G1054 | 2 | DF323 | CW | CRW | | FD134 | G1371 | DF361 | W | | |
| NINJA H2 (200cv) | 1000 | 15 | | FD373 | G1375 | 2 | | | | | FD220 | G1371 | | | | |
| NINJA H2 R (310cv) | 1000 | 15 | | FD373 | G1375 | 2 | | | | | FD220 | G1371 | | | | |
| VERSYS 1000 | 1000 | 12 | 14 | FD107 | G1370 | 2 | DF184 | CW | CRW | | FD103 | G1371 | DF191 | W | | |
| VERSYS 1000 | 1000 | 15 | | FD107 | G1370 | 2 | DF184 | CW | CRW | | FD103 | G1371 | DF191 | W | | |
| Z 1000 | 1000 | 03 | 06 | FD331 | G1370 | 2 | DF167 | CW | | | FD167 | G1371 | DF193 | W | | |
| Z 1000 | 1000 | 07 | 08 | FD371 | G1370 | 2 | DF184 | CW | CRW | | FD134 | G1371 | DF191 | W | | |
| Z 1000 | 1000 | 08 | 09 | FD371 | G1370 | 2 | DF184 | CW | CRW | | FD134 | G1371 | DF191 | W | | |
| Z 1000 | 1000 | 10 | 14 | FD325 | G1370 | 2 | DF184 | CW | CRW | | FD167 | G1371 | DF191 | W | | |
| Z 1000 ABS | 1000 | 14 | | FD325 | G1370 | 2 | DF184 | CW | CRW | | FD167 | G1371 | DF191 | W | | |
| Z 1000 | 1000 | 15 | | FD325 | G1370 | 2 | DF184 | CW | CRW | | | | DF191 | W | | |
| Z 1000 SX | 1000 | 11 | | FD325 | G1370 | 2 | DF184 | CW | CRW | | FD167 | G1371 | DF191 | W | | |
| ZG 1000 CONCOURS | 1000 | 94 | | FD090 | G1054 | 2 | | | | | FD090 | G1054 | | | | |
| ZX 10R | 1000 | 04 | 05 | FD290 | G1370 | 2 | DF184 | CW | CRW | | FD167 | G1371 | DF193 | W | | |
| ZX 10R | 1000 | 06 | 07 | FD290 | G1375 | 2 | DF184 | CW | CRW | | FD167 | G1371 | DF193 | W | | |
| ZX 10R | 1000 | 08 | 10 | FD325 | G1375 | 2 | DF190 | CW | CRW | | FD167 | G1371 | DF193 | W | | |
| ZX 10R | 1000 | 11 | | FD325 | G1375 | 2 | DF190 | CW | CRW | | FD363 | G1371 | DF193 | WA | | |
| ZX 10R ABS | 1000 | 11 | | FD325 | G1375 | 2 | DF190 | CW | CRW | | FD363 | G1371 | DF193 | WA | | |
| GPZ 1100 (ZX1100E1) LEFT/IZQ | 1100 | 95 | | FD174 | G1054 | 2 | DF167 | CW | | | | | | | | |
| GPZ 1100 (ZX1100E1) RIGHT/DER | 1100 | 95 | | FD179 | G1054 | 2 | DF167 | CW | | | FD167 | G1054 | | | | |
| GPZ 1100 S | 1100 | 95 | | FD266 | G1054 | 2 | DF167 | CW | | | FD111 | G1054 | | | | |
| ZEPHYR 1100 | 1100 | 92 | 92 | FD107 | G1054 | 2 | | | | | FD090 | G1054 | DF196 | W | | |
| ZEPHYR 1100 | 1100 | 93 | 95 | FD090 | G1054 | 2 | DF169 | CW | | | FD090 | G1054 | DF196 | W | | |
| ZEPHYR 1100 LEFT/IZQ | 1100 | 96 | | FD174 | G1054 | 2 | DF169 | CW | | | | | | | | |
| ZEPHYR 1100 RIGHT/DER | 1100 | 96 | | FD179 | G1054 | 2 | DF169 | CW | | | FD090 | G1054 | DF196 | W | | |
| ZRX 1100 | 1100 | 97 | 00 | FD156 | G1054 | 2 | DF169 | CW | | | FD111 | G1054 | DF197 | W | | |
| ZX 1100 | 1100 | 93 | | FD107 | G1054 | 2 | | | | | FD111 | G1054 | | | | |
| ZZR 1100 | 1100 | 90 | 92 | FD107 | G1054 | 2 | DF169 | CW | | | FD090 | G1054 | DF161 | W | | |
| ZZR 1100 | 1100 | 93 | 01 | FD107 | G1054 | 2 | DF168 | CW | CRW | | FD111 | G1054 | DF186 | W | | |
| ZZR 1200 | 1200 | 01 | | FD107 | G1054 | 2 | DF168 | CW | CRW | | FD111 | G1054 | DF197 | W | | |
| ZRX 1200 | 1200 | 04 | | FD156 | G1054 | 2 | DF168 | CW | CRW | | FD111 | G1371 | DF198 | W | | |
| ZRX 1200 S | 1200 | 02 | 03 | FD156 | G1054 | 2 | DF169 | CW | | | FD111 | G1371 | DF198 | W | | |
| ZRX 1200 S | 1200 | 04 | | FD156 | G1054 | 2 | DF169 | CW | | | FD111 | G1371 | DF198 | W | | |
| ZRX 1200 R | 1200 | 04 | | FD156 | G1054 | 2 | DF169 | CW | | | FD111 | G1371 | DF198 | W | | |
| ZX-12 R | 1200 | 00 | 03 | FD156 | G1054 | 2 | DF168 | CW | CRW | | FD111 | G1371 | DF199 | W | | |
| ZX-12 R | 1200 | 04 | | FD290 | G1054 | 2 | DF167 | CW | | | FD111 | G1371 | DF199 | W | | |
| GTR 1400 | 1400 | 07 | 09 | FD371 | G1370 | 2 | DF190 | CW | CRW | | FD267 | G1371 | | | | |
| GTR 1400 | 1400 | 10 | | FD371 | G1370 | 2 | DF190 | CW | CRW | | FD267 | G1371 | | | | |
| GTR 1400 GRAND TOUR | 1400 | 10 | | FD371 | G1370 | 2 | DF190 | CW | CRW | | FD267 | G1371 | | | | |
| ZG 1400 CONCOURS | 1400 | 08 | | FD371 | G1370 | 2 | DF184 | CW | CRW | | FD267 | G1371 | | | | |
| ZG 1400 CONCOURS ABS | 1400 | 08 | 09 | FD371 | G1370 | 2 | DF184 | CW | CRW | | FD267 | G1371 | DF206 | W | | |
| ZG 1400 CONCOURS ABS | 1400 | 10 | | FD371 | G1370 | 2 | DF184 | CW | CRW | | FD267 | G1371 | DF206 | W | | |
| ZZR 1400 | 1400 | 06 | 11 | FD371 | G1375 | 2 | DF190 | CW | CRW | | FD267 | G1371 | DF191 | W | | |
| ZZR 1400 | 1400 | 12 | | FD371 | G1375 | 2 | DF190 | CW | CRW | | FD267 | G1371 | DF191 | W | | |
| ZX-14 R | 1400 | 06 | | FD371 | G1375 | 2 | DF190 | CW | CRW | | FD267 | G1371 | DF191 | W | | |
| ZX-14 R ABS | 1400 | 14 | | FD371 | G1375 | 2 | DF190 | CW | CRW | | FD267 | G1371 | DF191 | W | | |



**OE:** Original equipment (original replacement disc) • **OE:** Equipo original (disco de remplazo del original) For other models years previous to 1990 visit **www.galferonline.es** • Para otros modelos anteriores al año 1990 visitar **www.galferonline.es**
For consult TÜV (ABE) type approvals visit **www.galfermoto.com --> DOWNALOAD --> TÜV CERTIFICATIONS** • Para consultar las homologaciones TÜV (ABE) visitar **www.galfermoto.com --> DESCARGAS --> CERTIFICACIONES TÜV**

| BRAND & MODEL • MARCA Y MODELO<br>MARCA E MODELLO • MARQUE ET MODÉLE | C.C. | YEAR | | FRONT FD MF | FRONT COMPOUND RECOMMENDED | FRONT N° | FRONT DF | FRONT OE | FRONT UPGRADE 1 | FRONT UPGRADE 2 | REAR FD MF | REAR COMPOUND RECOMMENDED | REAR DF | REAR OE | REAR UPGRADE | KITS KG |
|---|---|---|---|---|---|---|---|---|---|---|---|---|---|---|---|---|
| VN 1500 DRIFTER | 1500 | 02 | | FD174 | G1054 | 1 | | | | | FD179 | G1054 | | | | |
| VN 1500 MEAN STREAK | 1500 | 01 | | FD156 | G1054 | 2 | DF168 | CW | CRW | | FD179 | G1054 | | | | |
| VN 1500 SUMO | 1500 | 94 | 96 | FD062 | G1054 | 1 | DF173 | | | | FD062 | G1054 | | | | |
| VN-15 SE | 1500 | 93 | | FD062 | G1054 | 1 | DF173 | | | | FD062 | G1054 | | | | |
| VN-CLASSIC | 1500 | 96 | 97 | FD174 | G1054 | 1 | DF173 | | | | FD062 | G1054 | | | | |
| VN-EASSIC Fi | 1500 | 00 | | FD174 | G1054 | 1 | | | | | FD179 | G1054 | | | | |
| VN-CLASSIC TOURER LEFT/IZQ | 1500 | 98 | 99 | FD174 | G1054 | 2 | | | | | | | | | | |
| VN-EASSIC TOURER RIGHT/DER | 1500 | 98 | 99 | FD179 | G1054 | 2 | | | | | FD062 | G1054 | | | | |
| VN-TOURER LEFT/IZQ | 1500 | 03 | | FD174 | G1054 | 2 | | | | | | | | | | |
| VN-TOURER RIGHT/DER | 1500 | 03 | | FD179 | G1054 | 2 | | | | | FD179 | G1054 | | | | |
| VN 1600 MEAN STREAK | 1600 | 04 | 04 | FD156 | G1054 | 2 | DF168 | CW | CRW | | FD179 | G1370 | | | | |
| VN 1600 MEAN STREAK | 1600 | 05 | | FD290 | G1054 | 2 | | | | | FD179 | G1370 | | | | |
| VN 1600 SUMO/CLASSIC LEFT/IZQ | 1600 | 03 | | FD174 | G1054 | 2 | | | | | | | | | | |
| VN 1600 SUMO/EASSIC RIGHT/DER | 1600 | 03 | | FD179 | G1054 | 2 | | | | | FD062 | G1054 | | | | |
| VN 1600 NOMAD LEFT/IZQ | 1600 | 05 | | FD174 | G1054 | 2 | | | | | | | | | | |
| VN 1600 NOMAD RIGHT/DER | 1600 | 05 | | FD179 | G1054 | 2 | | | | | FD179 | G1370 | | | | |
| VN 1700 CLASSIC LEFT/IZQ | 1700 | 09 | | FD174 | G1054 | 2 | | | | | | | | | | |
| VN 1700 CLASSIC RIGHT/DER | 1700 | 09 | | FD179 | G1370 | 2 | | | | | FD179 | G1370 | | | | |
| VN 1700 CLASSIC TOURER LEFT/IZQ | 1700 | 09 | | FD174 | G1054 | 2 | | | | | | | | | | |
| VN 1700 CLASSIC TOURER RIGHT/DER | 1700 | 09 | | FD179 | G1370 | 2 | | | | | FD179 | G1370 | | | | |
| VN 1700 VOYAGER | 1700 | 09 | | FD107 | G1370 | 2 | | | | | FD179 | G1370 | | | | |
| VN 1700 VOYAGER CUSTOM ABS | 1700 | 11 | | FD107 | G1370 | 2 | | | | | FD179 | G1370 | | | | |
| VN 2000 | 2000 | 04 | | FD107 | G1054 | 2 | | | | | FD179 | G1370 | | | | |
| **KAWASAKI INDONESIA** | | | | | | | | | | | | | | | | |
| ZX 130 VR | 130 | 12 | | FD117 | G1054 | 1 | | | | | MF | | - | | | |
| NINJA R | 150 | 10 | | FD117 | G1054 | 1 | | | | | FD117 | G1054 | | | | |
| NINJA RR | 150 | 10 | | FD117 | G1054 | 1 | | | | | FD117 | G1054 | | | | |
| NINJA SPECIAL EDITION | 150 | 10 | | FD117 | G1054 | 1 | | | | | FD117 | G1054 | | | | |
| NINJA SS | 150 | 10 | | FD117 | G1054 | 1 | | | | | FD117 | G1054 | | | | |
| NINJA 250 R | 250 | 08 | 12 | FD117 | G1054 | 1 | DF203 | W | | | FD117 | G1054 | DF204 | W | | |
| ZX-6R | 600 | 09 | | FD371 | G1375 | 2 | DF184 | CW | CRW | | FD167 | G1371 | DF193 | W | | |
| ER-6 N LEFT / IZQ | 650 | 09 | | FD174 | G1054 | 2 | DF184 | CW | CRW | | | | | | | |
| ER-6 N RIGHT / DER | 650 | 09 | | FD179 | G1054 | 2 | DF184 | CW | CRW | | FD167 | G1054 | DF193 | W | | |
| **KAWASAKI MALASIA** | | | | | | | | | | | | | | | | |
| NINJA KRR ZX 150 | 150 | 08 | | FD117 | G1054 | 1 | | | | | FD117 | G1054 | | | | |
| NINJA 250 R | 250 | 08 | 12 | FD117 | G1054 | 1 | DF203 | W | | | FD117 | G1054 | DF204 | W | | |
| Z 250 | 250 | 13 | | FD117 | G1054 | 1 | DF203 | W | | | FD117 | G1054 | DF204 | W | | |
| ER-6 F / LEFT / IZQ | 650 | 05 | | FD174 | G1054 | 2 | DF184 | CW | CRW | | | | | | | |
| ER-6 F / RIGHT / DER | 650 | 05 | | FD179 | G1054 | 2 | DF184 | CW | CRW | | FD167 | G1054 | DF193 | W | | |
| ER-6 N LEFT / IZQ | 650 | 05 | | FD174 | G1054 | 2 | DF184 | CW | CRW | | | | | | | |
| ER-6 N RIGHT / DER | 650 | 05 | | FD179 | G1054 | 2 | DF184 | CW | CRW | | FD167 | G1054 | DF193 | W | | |
| VERSYS 650 LEFT /IZQ | 650 | 10 | | FD174 | G1054 | 1 | DF184 | CW | CRW | | | | | | | |
| VERSYS 650 RIGHT / DER | 650 | 10 | | FD179 | G1054 | 1 | DF184 | CW | CRW | | FD167 | G1054 | DF193 | W | | |
| Z 800 | 800 | 13 | | FD331 | G1370 | 2 | DF190 | CW | CRW | | FD103 | G1371 | DF191 | W | | |
| Z 800 ABS | 800 | 13 | | FD331 | G1370 | 2 | DF190 | CW | CRW | | FD103 | G1371 | DF191 | W | | |
| Z 800e | 800 | 13 | | FD266 | G1370 | 2 | DF190 | CW | CRW | | FD103 | G1371 | DF191 | W | | |
| Z 800e ABS | 800 | 13 | | FD331 | G1370 | 2 | DF190 | CW | CRW | | FD103 | G1371 | DF191 | W | | |
| **KEEWAY** | | | | | | | | | | | | | | | | |
| K2 150 | 150 | 07 | | FD277 | G1054 | 1 | | | | | FD277 | G1054 | | | | |
| OUTLOOK 150 | 150 | 07 | | FD187 | G1054 | 1 | DF007 | W | | | FD187 | G1054 | | | | |
| SILVER BLADE 150 | 150 | 07 | | FD138 | G1054 | 2 | | | | | FD220 | G1054 | | | | |
| VIVA II 150 | 150 | 05 | | FD086 | G1054 | 1 | | | | | FD175 | G1054 | | | | |
| K2 250 | 250 | 07 | | FD277 | G1054 | 1 | | | | | FD277 | G1054 | | | | |
| SILVER BLADE 250 | 250 | 07 | | FD138 | G1054 | 2 | | | | | FD220 | G1054 | | | | |
| **KTM** | | | | | | | | | | | | | | | | |
| 200 DUKE | 200 | 12 | | FD450 | G1054 | 1 | DF789 | CW | | | FD165 | G1054 | DF790 | W | | |
| 200 DUKE ABS | 200 | 14 | | FD450 | G1054 | 1 | DF800 | CW | | | FD165 | G1054 | DF790 | W | | |
| RC 200 | 200 | 14 | | FD450 | G1054 | 1 | DF789 | CW | | | FD165 | G1054 | DF790 | W | | |
| 390 DUKE | 390 | 13 | | FD450 | G1054 | 1 | DF789 | CW | | | FD165 | G1054 | DF790 | W | | |
| 390 DUKE ABS | 390 | 14 | | FD450 | G1054 | 1 | DF800 | CW | | | FD165 | G1054 | DF790 | W | | |
| RC 390 | 390 | 14 | | FD450 | G1054 | 1 | DF800 | CW | | | FD165 | G1054 | DF790 | W | | |
| 560 SMR | 560 | 07 | | FD304 | G1054 | 1 | DF672 | FLW | | | FD291 | G1054 | DF607 | W | WLL | |
| 620 DUKE | 620 | 95 | 02 | FD068 | G1054 | 1 | | | | | FD165 | G1054 | DF607 | W | WLL | |
| 625 SMC | 625 | 06 | | FD176 | G1054 | 1 | | | | | FD165 | G1054 | DF607 | W | WLL | |
| 640 LC4 ADVENTURE R | 640 | 99 | 05 | FD138 | G1054 | 1 | DF672 | FLW | | | FD165 | G1054 | DF607 | W | WLL | |
| 640 LC4 ADVENTURE R | 640 | 06 | | FD138 | G1054 | 2 | DF672 | FLW | | | FD165 | G1054 | DF607 | W | WLL | |
| 640 DUKE | 640 | 99 | | FD176 | G1054 | 1 | | | | | FD165 | G1054 | | | | |
| 640 LC4 SUPERMOTARD | 640 | 02 | 04 | FD068 | G1054 | 1 | | | | | FD165 | G1054 | DF607 | W | WLL | |
| 640 LC4 SUPERMOTARD (DF606SM) | 640 | 05 | | FD176 | G1054 | 1 | DF606 | | | | FD165 | G1054 | DF607 | W | WLL | |
| 660 SMC SUPERMOTARD | 660 | 99 | | FD068 | G1054 | 1 | | | | | FD165 | G1054 | | | | |
| 660 SMC SUPERMOTARD | 660 | 99 | | FD176 | G1054 | 1 | | | | | FD165 | G1054 | | | | |
| 690 DUKE | 690 | 08 | | FD262 | G1054 | 1 | DF783 | CW | CRW | | FD165 | G1054 | DF798 | W | | |
| 690 DUKE III R | 690 | 10 | | FD262 | G1054 | 1 | DF783 | CW | CRW | | FD165 | G1054 | DF798 | W | | |

| BRAND & MODEL • MARCA Y MODELO<br>MARCA E MODELLO • MARQUE ET MODÉLE | C.C. | YEAR | | FRONT FD MF | FRONT COMPOUND RECOMMENDED | FRONT N° | FRONT DF | FRONT OE | FRONT UPGRADE 1 | FRONT UPGRADE 2 | REAR FD MF | REAR COMPOUND RECOMMENDED | REAR DF | REAR OE | REAR UPGRADE | KITS KG |
|---|---|---|---|---|---|---|---|---|---|---|---|---|---|---|---|---|
| 690 DUKE | 690 | 12 | | FD176 | G1054 | 1 | DF783 | CW | CRW | | FD165 | G1054 | DF798 | W | | |
| 690 DUKE R | 690 | 13 | | FD373 | G1054 | 1 | DF787 | CW | | | FD165 | G1054 | DF798 | W | | |
| 690 SM | 690 | 07 | | FD176 | G1054 | 1 | DF672 | FLW | | | FD165 | G1054 | DF782 | FLW | | |
| 690 SM /PRESTIGE | 690 | 07 | | FD262 | G1054 | 1 | DF660 | CW | CRW | | FD165 | G1054 | DF771 | W | | |
| 690 SMC | 690 | 08 | | FD262 | G1054 | 1 | DF606 | W | FLW | FLS | FD165 | G1054 | DF782 | FLW | | |
| 690 SMC R | 690 | 13 | | FD262 | G1054 | 1 | DF672 | FLW | | | FD165 | G1054 | DF771 | W | | |
| 690 SMC R ABS | 690 | 13 | | FD262 | G1054 | 1 | DF672 | FLW | | | FD165 | G1054 | DF771 | W | | |
| 690 SMR | 690 | 07 | | FD262 | G1054 | 1 | DF783 | CW | CRW | | FD165 | G1054 | DF798 | W | | |
| 950 ADVENTURE S | 950 | 03 | | FD172 | G1370 | 2 | DF672 | FLW | | | FD138 | G1396 | DF703 | W | | |
| 950 R SUPER ENDURO | 950 | 06 | | FD172 | G1370 | 1 | DF770 | W | FLW | | FD138 | G1396 | | | | |
| 950 SUPERMOTO R | 950 | 07 | | FD262 | G1370 | 2 | DF783 | CW | CRW | | FD138 | G1370 | DF782 | FLW | | |
| LC8 990 DUKE | 950 | 03 | | FD262 | G1370 | 2 | DF660 | CW | CRW | | FD165 | G1396 | | | | |
| SUPERMOTO 950 | 950 | 05 | | FD262 | G1370 | 2 | | | | | FD138 | G1370 | DF786 | FLW | | |
| SUPER DUKE | 950 | 05 | | FD262 | G1370 | 2 | DF783 | CW | CRW | | FD165 | G1396 | | | | |
| 990 ADVENTURE R | 990 | 09 | | FD172 | G1370 | 2 | DF672 | FLW | | | FD138 | G1370 | DF782 | FLW | | |
| 990 ADVENTURE / S | 990 | 06 | | FD172 | G1370 | 2 | DF770 | W | FLW | | FD138 | G1370 | DF782 | FLW | | |
| 990 ADVENTURE / S ABS | 990 | 06 | | FD172 | G1370 | 2 | DF770 | W | FLW | | FD138 | G1370 | DF782 | FLW | | |
| 990 R SUPER ENDURO | 990 | 06 | | FD172 | G1370 | 1 | DF770 | W | FLW | | FD138 | G1396 | DF782 | FLW | | |
| 990 SM R | 990 | 09 | | FD373 | G1370 | 2 | | | | | FD138 | G1370 | DF786 | FLW | | |
| 990 SM T | 990 | 09 | | FD262 | G1370 | 2 | | | | | FD138 | G1370 | DF786 | FLW | | |
| 990 SM T ABS | 990 | 11 | | FD262 | G1370 | 2 | | | | | FD138 | G1370 | DF786 | FLW | | |
| 990 SUPER DUKE | 990 | 06 | | FD262 | G1375 | 2 | DF883 | CW | | | FD165 | G1371 | DF786 | FLW | | |
| 990 SUPERMOTO / R | 990 | 08 | 09 | FD262 | G1370 | 2 | | | | | FD138 | G1370 | DF786 | FLW | | |
| 990 SUPERMOTO / R | 990 | 10 | | FD373 | G1370 | 2 | | | | | FD138 | G1370 | DF786 | FLW | | |
| 1050 ADVENTURE | 1050 | 15 | | FD176 | G1370 | 2 | DF783 | CW | CRW | | FD138 | G1370 | DF793 | FLW | | |
| 1190 ADVENTURE | 1190 | 13 | | FD176 | G1370 | 2 | DF783 | CW | CRW | | FD138 | G1370 | DF793 | FLW | | |
| 1190 ADVENTURE R | 1190 | 13 | | FD176 | G1370 | 2 | DF783 | CW | CRW | | FD138 | G1370 | DF793 | FLW | | |
| RC 8 | 1190 | 08 | | FD373 | G1375 | 2 | DF783 | CW | CRW | | FD220 | G1371 | DF784 | W | FLW | |
| RC 8 R | 1190 | 09 | | FD373 | G1375 | 2 | DF783 | CW | CRW | | FD220 | G1371 | DF784 | W | FLW | |
| 1290 SUPER ADVENTURE | 1290 | 15 | | FD475 | G1370 | 2 | DF783 | CW | CRW | | FD172 | G1370 | DF793 | FLW | | |
| 1290 SUPER DUKE R | 1290 | 13 | | FD373 | G1375 | 2 | DF843 | CW | | | FD220 | G1371 | DF788 | W | | |
| **KYMCO** | | | | | | | | | | | | | | | | |
| BET & WIN 150 | 150 | 00 | | FD145 | G1054 | 1 | | | | | FD145 | G1054 | | | | |
| CUSTOM DX 150 | 150 | 94 | | FD073 | G1054 | 1 | | | | | MF | | - | | | |
| DINK 150 | 150 | 97 | | FD145 | G1054 | 1 | DF878 | W | | | FD145 | G1054 | DF878 | W | | |
| HEROISM | 150 | 94 | | FD175 | G1054 | 1 | DF018 | | | | MF | | - | | | |
| HIPSER 150 | 150 | 00 | | FD145 | G1054 | 1 | | | | | MF | | - | | | |
| JETIX | 150 | 10 | | FD073 | G1054 | 1 | | | | | FD145 | G1054 | | | | |
| MINI BIKE 150 | 150 | 14 | | FD145 | G1054 | 1 | | | | | MF | | - | | | |
| MOVIE XL 150 | 150 | 01 | | FD187 | G1054 | 1 | | | | | MF740 | G2165 | - | | | |
| NSR 150 | 150 | 94 | | FD145 | G1054 | 1 | | | | | FD145 | G1054 | | | | |
| PEOPLE | 150 | 99 | | FD261 | G1054 | 1 | | | | | MF740 | G2165 | - | | | |
| QUANNON 150 | 150 | 10 | | FD145 | G1054 | 1 | | | | | FD145 | G1054 | | | | |
| STRAIGHT 150 | 150 | 05 | | FD145 | G1054 | 1 | | | | | FD145 | G1054 | | | | |
| DOWNTOWN | 200 | 10 | | FD266 | G1054 | 1 | | | | | FD438 | G1054 | | | | |
| LIKE | 200 | 09 | | FD187 | G1054 | 1 | | | | | FD145 | G1054 | | | | |
| PEOPLE | 200 | 05 | | FD261 | G1054 | 1 | | | | | MF740 | G2165 | - | | | |
| YAGER GT 200 i | 200 | 09 | | FD145 | G1054 | 1 | | | | | FD145 | G1054 | | | | |
| BET & WIN 250 | 250 | 00 | | FD145 | G1054 | 1 | | | | | FD145 | G1054 | | | | |
| GRAND DINK 250 | 250 | 01 | 01 | FD145 | G1054 | 1 | | | | | FD145 | G1054 | | | | |
| GRAND DINK 250 | 250 | 02 | | FD275 | G1054 | 1 | | | | | FD276 | G1054 | | | | |
| PEOPLE | 250 | 02 | 04 | FD145 | G1054 | 1 | | | | | MF | | - | | | |
| PEOPLE | 250 | 05 | | FD145 | G1054 | 1 | | | | | FD474 | G1054 | | | | |
| PEOPLE S DER./RIGHT | 250 | 06 | | FD145 | G1054 | 2 | | | | | | | | | | |
| PEOPLE S IZQ./LEFT | 250 | 06 | | FD187 | G1054 | 2 | | | | | FD474 | G1054 | | | | |
| SUPER 9 | 250 | 00 | | FD145 | G1054 | 1 | | | | | FD261 | G1054 | | | | |
| VENOX STEEL | 250 | 01 | | FD266 | G1054 | 1 | | | | | MF | | - | | | |
| XCITING 250 | 250 | 05 | 05 | FD266 | G1054 | 1 | | | | | FD474 | G1054 | | | | |
| XCITING 250 | 250 | 06 | | FD266 | G1054 | 2 | | | | | FD474 | G1054 | | | | |
| XCITING 250 R | 250 | 08 | | FD266 | G1054 | 2 | | | | | FD266 | G1054 | | | | |
| YUP 250 | 250 | 02 | | FD145 | G1054 | 1 | | | | | FD145 | G1054 | | | | |
| AGILITY MAXI | 300 | 15 | | FD245 | G1054 | 1 | | | | | FD438 | G1380 | | | | |
| DOWNTOWN | 300 | 09 | 14 | FD266 | G1054 | 1 | | | | | FD438 | G1380 | | | | |
| K - XCT 300i | 300 | 12 | | FD245 | G1054 | 1 | | | | | FD474 | G1380 | | | | |
| PEOPLE 300 RIGHT/DER. | 300 | 08 | | FD145 | G1054 | 2 | | | | | | | | | | |
| PEOPLE 300 LEFT/IZQ. | 300 | 08 | | FD187 | G1054 | 2 | | | | | FD214 | G1380 | | | | |
| PEOPLE GT 300i | 300 | 10 | | FD245 | G1054 | 1 | | | | | FD399 | G1380 | | | | |
| SUPER DINK 300 | 300 | 10 | | FD266 | G1054 | 1 | | | | | FD438 | G1380 | | | | |
| SUPER DINK 300 i ABS | 300 | 11 | | FD266 | G1054 | 1 | | | | | FD438 | G1380 | | | | |
| XCITING 300i | 300 | 08 | | FD266 | G1054 | 2 | | | | | FD474 | G1380 | | | | |
| XCITING 300i R | 300 | 08 | | FD266 | G1054 | 2 | | | | | FD474 | G1380 | | | | |
| YAGER GT 300 i | 300 | 13 | | FD266 | G1054 | 1 | | | | | FD438 | G1380 | | | | |
| DOWNTOWN | 350 | 15 | | FD245 | G1054 | 1 | | | | | FD438 | G1380 | | | | |



**OE:** Original equipment (original replacement disc) • **OE:** Equipo original (disco de remplazo del original) For other models years previous to 1990 visit **www.galferonline.es** • Para otros modelos anteriores al año 1990 visitar **www.galferonline.es**
For consult TÜV (ABE) type approvals visit **www.galfermoto.com --> DOWNALOAD --> TÜV CERTIFICATIONS** • Para consultar las homologaciones TÜV (ABE) visitar **www.galfermoto.com --> DESCARGAS --> CERTIFICACIONES TÜV**

| BRAND & MODEL • MARCA Y MODELO<br>MARCA E MODELLO • MARQUE ET MODÉLE | C.C. | YEAR | | FRONT FD MF | FRONT COMPOUND RECOMMENDED | FRONT N° | FRONT DF | FRONT OE | FRONT UPGRADE 1 | FRONT UPGRADE 2 | REAR FD MF | REAR COMPOUND RECOMMENDED | REAR DF | REAR OE | REAR UPGRADE | KITS KG |
|---|---|---|---|---|---|---|---|---|---|---|---|---|---|---|---|---|
| XCITING 400 | 400 | 12 | | FD367 | G1054 | 2 | | | | | FD266 | G1054 | | | | |
| XCITING 500 | 500 | 04 | | FD266 | G1054 | 2 | | | | | FD266 | G1380 | | | | |
| MYROAD 700 | 700 | 08 | | FD266 | G1380 | 2 | | | | | FD266 | G1380 | | | | |
| **LAMBRETTA** | | | | | | | | | | | | | | | | |
| 150 DL | 150 | 14 | | MF766 | G2165 | | - | | | | MF766 | G2165 | - | | | |
| 150 LI | 150 | 14 | | MF765 | G2165 | | - | | | | MF765 | G2165 | - | | | |
| PATO 150 N | 150 | 09 | | FD073 | G1054 | 1 | | | | | FD073 | G1054 | | | | |
| 175 LI | 175 | 14 | | MF765 | G2165 | | - | | | | MF765 | G2165 | - | | | |
| 175 TV II | 175 | 14 | | MF765 | G2165 | | - | | | | MF765 | G2165 | - | | | |
| 200 DL | 200 | 14 | | MF766 | G2165 | | - | | | | MF766 | G2165 | - | | | |
| **LAVERDA** | | | | | | | | | | | | | | | | |
| 650 | 650 | 92 | | FD068 | G1054 | 2 | | | | | FD012 | G1054 | | | | |
| GHOST | 650 | 96 | 97 | FD068 | G1054 | 2 | DF660 | CW | CRW | | FD012 | G1054 | DF458 | W | | |
| SPORT | 650 | 95 | | FD068 | G1054 | 2 | DF660 | CW | CRW | | FD012 | G1054 | DF458 | W | | |
| 668 HIDALGO | 668 | 90 | | FD075 | G1054 | 2 | | | | | FD075 | G1054 | | | | |
| 700 EL CID | 700 | 90 | | FD075 | G1054 | 2 | | | | | FD075 | G1054 | | | | |
| 750 BLACK STRIKE | 750 | 98 | | FD068 | G1054 | 2 | DF660 | CW | CRW | | FD012 | G1054 | DF458 | W | | |
| 750 FORMULA | 750 | 98 | | FD068 | G1054 | 2 | DF660 | CW | CRW | | FD012 | G1054 | DF458 | W | | |
| 750 SUPER SPORT | 750 | 00 | | FD068 | G1054 | 2 | DF660 | CW | CRW | | FD012 | G1054 | DF458 | W | | |
| SFC 1000 | 1000 | 03 | | FD262 | G1054 | 2 | | | | | FD220 | G1054 | | | | |
| **LML** | | | | | | | | | | | | | | | | |
| STAR 2T (TODAS) | 150 | 10 | | FD200 | G1054 | 1 | DF650 | W | RW | | MF601 | G2165 | - | | | |
| STAR GT 2T | 150 | 10 | | FD200 | G1054 | 1 | DF650 | W | RW | | MF601 | G2165 | - | | | |
| STAR 4T (TODAS) | 151 | 10 | | FD200 | G1054 | 1 | DF650 | W | RW | | MF601 | G2165 | - | | | |
| STAR GT 4T | 151 | 10 | | FD200 | G1054 | 1 | DF650 | W | RW | | MF601 | G2165 | - | | | |
| STAR RS 4T | 151 | 10 | | FD200 | G1054 | 1 | DF650 | W | RW | | MF601 | G2165 | - | | | |
| STAR MAT SERIES 4T | 151 | 10 | | FD200 | G1054 | 1 | DF650 | W | RW | | MF601 | G2165 | - | | | |
| STAR BICOLOR VINTAGE 4T | 151 | 10 | | FD200 | G1054 | 1 | DF650 | W | RW | | MF601 | G2165 | - | | | |
| STAR CORSA 4T | 165 | 10 | | FD200 | G1054 | 1 | DF650 | W | RW | | MF601 | G2165 | - | | | |
| STAR 4T (TODAS) | 200 | 12 | | FD200 | G1054 | 1 | DF650 | W | RW | | MF601 | G2165 | - | | | |
| STAR ART (TODAS) | 200 | 12 | | FD200 | G1054 | 1 | DF650 | W | RW | | MF601 | G2165 | - | | | |
| STAR GT (TODAS) | 200 | 12 | | FD200 | G1054 | 1 | DF650 | W | RW | | MF601 | G2165 | - | | | |
| STAR URBAN (TODAS) | 200 | 12 | | FD200 | G1054 | 1 | DF650 | W | RW | | MF601 | G2165 | - | | | |
| STAR RS/SPORT | 200 | 12 | | FD200 | G1054 | 1 | DF650 | W | RW | | MF601 | G2165 | - | | | |
| STAR OFF ROAD | 200 | 12 | | FD200 | G1054 | 1 | DF650 | W | RW | | MF601 | G2165 | - | | | |
| **LINHAI** | | | | | | | | | | | | | | | | |
| MONARCH | 160 | 04 | | FD169 | G1054 | 1 | DF458 | W | | | FD214 | G1054 | DF484 | W | | |
| MAIN STR. 260 | 260 | 04 | | FD169 | G1054 | 1 | DF458 | W | | | FD214 | G1054 | DF484 | W | | |
| **LONCIN** | | | | | | | | | | | | | | | | |
| LX 150 | 150 | 02 | | FD169 | G1054 | 1 | | | | | MF | | - | | | |
| **MAGURA** | | | | | | | | | | | | | | | | |
| 4 PADS CALIPER SM | | 07 | | FD304 | G1375 | | | | | | | | | | | |
| **MALAGUTI** | | | | | | | | | | | | | | | | |
| CIAK | 150 | 03 | | FD153 | G1054 | 1 | | | | | FD153 | G1054 | | | | |
| F 18 WARRIOR | 150 | 00 | 03 | FD153 | G1054 | 1 | | | | | FD228 | G1054 | DF649 | W | | |
| MADISON 150 | 150 | 00 | | FD162 | G1054 | 1 | DF622 | W | | | FD228 | G1054 | DF622 | W | | |
| MADISON 180 | 180 | 02 | | FD138 | G1054 | 1 | DF622 | W | | | FD220 | G1054 | DF622 | W | | |
| MADISON 200 | 200 | 04 | | FD138 | G1054 | 1 | DF622 | W | | | FD220 | G1054 | DF622 | W | | |
| PHANTOM MAX 200 | 200 | 04 | | FD162 | G1054 | 1 | DF622 | W | | | FD220 | G1054 | DF622 | W | | |
| MADISON 250 | 250 | 99 | 05 | FD245 | G1054 | 1 | DF621 | W | | | FD228 | G1054 | DF622 | W | | |
| MADISON RS 250 | 250 | 06 | 06 | FD074 | G1054 | 1 | | | | | FD228 | G1054 | DF622 | W | | |
| MADISON 3 250 i.e. | 250 | 07 | | FD162 | G1054 | 1 | | | | | FD220 | G1054 | | | | |
| PASSWORD 250 | 250 | 05 | 06 | FD074 | G1054 | 1 | | | | | FD228 | G1054 | DF621 | | | |
| PASSWORD 250 | 250 | 07 | | FD162 | G1054 | 1 | | | | | FD228 | G1054 | | | | |
| PHANTOM MAX 250 | 250 | 05 | | FD162 | G1054 | 1 | DF622 | W | | | FD228 | G1054 | DF622 | W | | |
| MADISON 400 | 400 | 01 | 05 | FD245 | G1054 | 1 | DF621 | W | | | FD228 | G1380 | DF621 | | | |
| MADISON K 400 | 400 | 06 | | FD245 | G1054 | 1 | | | | | FD228 | G1380 | DF621 | | | |
| SPIDER MAX GT 500 | 500 | 04 | | FD074 | G1054 | 2 | | | | | FD228 | G1054 | | | | |
| **MBK MOTOBEKANE** | | | | | | | | | | | | | | | | |
| DOODO | 150 | 01 | | FD153 | G1054 | 1 | DF492 | W | | | MF640 | G2165 | - | | | |
| SKYLINER | 150 | 01 | | FD138 | G1054 | 1 | DF492 | W | | | FD220 | G1054 | | | | |
| THUNDER | 150 | 01 | | FD138 | G1054 | 1 | | | | | FD220 | G1054 | | | | |
| SKYLINER | 180 | 03 | | FD138 | G1054 | 1 | DF492 | W | | | FD220 | G1054 | | | | |
| SKYLINER | 250 | 00 | | FD169 | G1054 | 1 | DF458 | W | | | FD214 | G1054 | | | | |
| KILIBRE | 300 | 03 | | FD138 | G1054 | 1 | | | | | FD138 | G1380 | | | | |
| SKYLINER | 400 | 04 | | FD142 | G1054 | 1 | DF500 | W | | | FD352 | G1380 | DF501 | W | | |
| **MINELLI** | | | | | | | | | | | | | | | | |
| OMEGA 250 | 250 | 06 | | FD169 | G1054 | 1 | | | | | FD214 | G1054 | | | | |
| **MONDIAL** | | | | | | | | | | | | | | | | |
| EVO | 1000 | 03 | | FD262 | G1054 | 2 | DF660 | CW | CRW | | FD220 | G1054 | | | | |
| NUDA | 1000 | 03 | | FD262 | G1054 | 2 | DF660 | CW | CRW | | FD220 | G1054 | | | | |
| PIEGA 1000 | 1000 | 03 | | FD262 | G1054 | 2 | DF660 | CW | CRW | | FD220 | G1054 | | | | |

OE discs → W FLW CW Special discs → WLL WS RW RWS FLS FRS CRW

| BRAND & MODEL • MARCA Y MODELO<br>MARCA E MODELLO • MARQUE ET MODÉLE | C.C. | YEAR | | FRONT FD MF | COMPOUND RECOMMENDED | N° | DF | OE | UPGRADE 1 | UPGRADE 2 | REAR FD MF | COMPOUND RECOMMENDED | DF | OE | UPGRADE | KITS KG |
|---|---|---|---|---|---|---|---|---|---|---|---|---|---|---|---|---|
| **MOTO GUZZI** | | | | | | | | | | | | | | | | |
| 350 NEVADA | 350 | 92 | | FD012 | G1054 | 1 | | | | | FD012 | G1054 | | | | |
| 350 TRENTACINQUE GT | 350 | 92 | | FD012 | G1054 | 1 | | | | | FD012 | G1054 | | | | |
| V 35 FLORIDA III | 350 | 92 | | FD012 | G1054 | 1 | | | | | FD012 | G1054 | | | | |
| 750 BREVA i.e. | 750 | 03 | | FD176 | G1054 | 1 | DF660 | CW | CRW | | FD012 | G1054 | | | | |
| 750 NEVADA | 750 | 92 | | FD012 | G1054 | 1 | | | | | FD012 | G1054 | | | | |
| 750 NEVADA CLUB | 750 | 98 | | FD012 | G1054 | 1 | | | | | FD012 | G1054 | | | | |
| 750 SP | 750 | 92 | | FD012 | G1054 | 2 | | | | | FD012 | G1054 | | | | |
| NEVADA 750 AQUILA NERA | 750 | 10 | | FD176 | G1054 | 1 | DF660 | CW | CRW | | FD220 | G1054 | | | | |
| STR V 750 ie | 750 | 03 | | FD176 | G1054 | 1 | DF660 | CW | CRW | | FD220 | G1054 | | | | |
| V 7 CLASSIC | 750 | 08 | | FD176 | G1054 | 1 | DF660 | CW | CRW | | FD012 | G1054 | | | | |
| V 7 CLASSIC CAFÉ | 750 | 09 | | FD176 | G1054 | 1 | DF660 | CW | CRW | | FD220 | G1054 | | | | |
| V 7 RACER | 750 | 11 | | FD176 | G1054 | 1 | | | | | FD220 | G1054 | | | | |
| V 7 SCRAMBLER | 750 | 12 | | FD176 | G1054 | 1 | | | | | FD220 | G1054 | | | | |
| GRISO 850 8V | 850 | 06 | 08 | FD176 | G1054 | 2 | DF660 | CW | CRW | | FD220 | G1371 | | | | |
| GRISO 850 8V SE SPECIAL EDITION | 850 | 09 | | FD176 | G1054 | 2 | DF660 | CW | CRW | | FD220 | G1371 | | | | |
| STR BREVA 850 | 850 | 06 | | FD176 | G1054 | 2 | DF660 | CW | CRW | | FD220 | G1054 | | | | |
| 940 CUSTOM | 940 | 07 | | FD176 | G1375 | 2 | DF660 | CW | CRW | | FD138 | G1370 | | | | |
| BELLAGIO AQUILA NERA | 940 | 10 | | FD138 | G1054 | 2 | DF660 | CW | CRW | | FD138 | G1370 | | | | |
| 1000 CALIFORNIA III C.I./I.E | 1000 | 92 | | FD013 | G1054 | 2 | | | | | FD013 | G1054 | | | | |
| 1000 SP III i.e. | 1000 | 92 | | FD013 | G1054 | 2 | | | | | FD013 | G1054 | | | | |
| CALIFORNIA AQUILA NERA | 1000 | 10 | | FD176 | G1375 | 2 | DF660 | CW | CRW | | FD220 | G1371 | | | | |
| CALIFORNIA SPECIAL SPORT | 1000 | 03 | | FD176 | G1375 | 2 | DF660 | CW | CRW | | FD138 | G1370 | | | | |
| CALIFORNIA STONE | 1000 | 03 | | FD176 | G1375 | 1 | DF660 | CW | CRW | | FD138 | G1370 | | | | |
| CENTAURO | 1000 | 96 | | FD068 | G1054 | 2 | DF660 | CW | CRW | | FD012 | G1054 | | | | |
| DAYTONA i.e | 1000 | 91 | 94 | FD068 | G1054 | 2 | DF472 | CW | | | FD012 | G1054 | | | | |
| DAYTONA i.e | 1000 | 95 | | FD068 | G1054 | 2 | DF660 | CW | CRW | | FD012 | G1054 | | | | |
| EV STONE | 1000 | 02 | | FD176 | G1375 | 1 | DF660 | CW | CRW | | FD220 | G1371 | | | | |
| MGS/01 1000 | 1000 | 03 | | FD262 | G1054 | 2 | DF660 | CW | CRW | | FD220 | G1054 | | | | |
| MILLE GT | 1000 | 92 | | FD013 | G1054 | 2 | | | | | FD012 | G1054 | | | | |
| QUOTA I.E | 1000 | 91 | | FD098 | G1054 | 2 | | | | | FD089 | G1054 | | | | |
| V11 SPORT BALLABIO | 1000 | 03 | | FD176 | G1054 | 2 | DF660 | CW | CRW | | FD220 | G1054 | | | | |
| 1100 I CALIFORNIA | 1100 | 94 | | FD013 | G1054 | 2 | | | | | FD013 | G1054 | | | | |
| 1100 I CALIFORNIA | 1100 | 95 | | FD068 | G1054 | 2 | | | | | FD013 | G1054 | | | | |
| 1100 SPORT | 1100 | 95 | 97 | FD068 | G1054 | 2 | DF660 | CW | CRW | | FD012 | G1054 | | | | |
| BREVA 1100 | 1100 | 05 | | FD176 | G1054 | 2 | DF660 | CW | CRW | | FD138 | G1054 | | | | |
| CALIFORNIA ESPECIAL | 1100 | 99 | | FD068 | G1054 | 2 | DF660 | CW | CRW | | FD138 | G1054 | | | | |
| CALIFORNIA EV | 1100 | 97 | | FD068 | G1054 | 2 | DF660 | CW | CRW | | FD138 | G1054 | | | | |
| CALIFORNIA JACKAL | 1100 | 99 | | FD068 | G1054 | 2 | DF660 | CW | CRW | | FD138 | G1054 | | | | |
| GRISO | 1100 | 05 | | FD176 | G1054 | 2 | DF660 | CW | CRW | | FD220 | G1054 | | | | |
| STR 1100 | 1100 | 04 | | FD176 | G1054 | 2 | DF660 | CW | CRW | | FD220 | G1054 | | | | |
| V-10 CENTAURO SPORT | 1100 | 99 | | FD068 | G1054 | 2 | DF660 | CW | CRW | | FD012 | G1054 | | | | |
| V-11 LE MANS ROSSO CORSA | 1100 | 03 | | FD176 | G1054 | 2 | DF660 | CW | CRW | | FD012 | G1054 | | | | |
| V-11 SCURA | 1100 | 03 | | FD176 | G1054 | 2 | DF660 | CW | CRW | | FD012 | G1054 | | | | |
| V-11 SPORT / LE MANS | 1100 | 99 | | FD176 | G1054 | 2 | DF660 | CW | CRW | | FD012 | G1054 | | | | |
| STELVIO | 1150 | 08 | 10 | FD176 | G1054 | 2 | DF660 | CW | CRW | | FD138 | G1054 | | | | |
| STELVIO TT | 1150 | 09 | 10 | FD176 | G1054 | 2 | DF660 | CW | CRW | | FD138 | G1054 | | | | |
| NORGE 1200 | 1200 | 06 | | FD176 | G1054 | 2 | | | | | FD186 | G1054 | | | | |
| NORGE 1200 GT 8V | 1200 | 11 | | FD176 | G1054 | 2 | | | | | FD186 | G1371 | | | | |
| SPORT 1200 | 1200 | 07 | 08 | FD176 | G1054 | 2 | DF660 | CW | CRW | | FD138 | G1370 | | | | |
| SPORT 1200 V4 | 1200 | 09 | | FD176 | G1054 | 2 | DF660 | CW | CRW | | FD138 | G1370 | | | | |
| STELVIO | 1200 | 11 | | FD176 | G1054 | 2 | DF660 | CW | CRW | | FD138 | G1370 | | | | |
| STELVIO NTX | 1200 | 11 | 11 | FD176 | G1054 | 2 | DF660 | CW | CRW | | FD138 | G1370 | | | | |
| STELVIO NTX | 1200 | 12 | | FD262 | G1054 | 2 | DF660 | CW | CRW | | FD138 | G1370 | | | | |
| V 12 LE MANS | 1200 | 10 | | FD373 | G1054 | 2 | | | | | FD138 | G1370 | | | | |
| V 12 STRADA | 1200 | 10 | | FD373 | G1054 | 2 | | | | | FD138 | G1370 | | | | |
| V 12 X | 1200 | 10 | | FD373 | G1054 | 2 | | | | | FD138 | G1370 | | | | |
| AUDACE | 1400 | 15 | | FD176 | G1054 | 2 | | | | | FD138 | G1370 | | | | |
| CALIFORNIA CUSTOM | 1400 | 13 | | FD176 | G1054 | 2 | | | | | FD138 | G1370 | | | | |
| CALIFORNIA TOURING | 1400 | 13 | | FD176 | G1054 | 2 | | | | | FD138 | G1370 | | | | |
| EL DORADO | 1400 | 15 | | FD176 | G1054 | 2 | | | | | FD138 | G1370 | | | | |
| **MOTO MORINI** | | | | | | | | | | | | | | | | |
| 400 S | 400 | 95 | | FD012 | G1054 | 1 | | | | | FD012 | G1054 | | | | |
| 9 1/2 | 950 | 05 | | FD176 | G1054 | 2 | DF660 | CW | CRW | | FD220 | G1054 | | | | |
| CORSARIO 1200 | 1200 | 05 | | FD176 | G1054 | 2 | DF660 | CW | CRW | | FD220 | G1054 | | | | |
| CORSARIO AVIO 1200 | 1200 | 08 | | FD176 | G1054 | 2 | DF660 | CW | CRW | | FD220 | G1371 | | | | |
| GRANFERRO | 1200 | 10 | | FD373 | G1370 | 2 | | | | | FD138 | G1370 | | | | |
| GRANPASSO | 1200 | 08 | | FD172 | G1054 | 2 | | | | | FD138 | G1370 | | | | |
| MM3 | 1200 | 07 | | FD176 | G1054 | 2 | DF660 | CW | CRW | | FD220 | G1371 | | | | |
| SCRAMBLER | 1200 | 09 | | FD172 | G1054 | 2 | | | | | FD138 | G1054 | | | | |
| **MOTOM** | | | | | | | | | | | | | | | | |
| DOLCEVITA | 150 | 07 | | FD175 | G1054 | 1 | | | | | FD073 | G1054 | | | | |
| TRANSCITY | 150 | 07 | | FD169 | G1054 | 1 | | | | | FD073 | G1054 | | | | |



**OE:** Original equipment (original replacement disc) • **OE:** Equipo original (disco de remplazo del original) For other models years previous to 1990 visit **www.galferonline.es** • Para otros modelos anteriores al año 1990 visitar **www.galferonline.es**
For consult TÜV (ABE) type approvals visit **www.galfermoto.com --> DOWNALOAD --> TÜV CERTIFICATIONS** • Para consultar las homologaciones TÜV (ABE) visitar **www.galfermoto.com --> DESCARGAS --> CERTIFICACIONES TÜV**

| BRAND & MODEL • MARCA Y MODELO<br>MARCA E MODELLO • MARQUE ET MODÉLE | C.C. | YEAR | | FRONT FD MF | FRONT COMPOUND RECOMMENDED | FRONT N° | FRONT DF | FRONT OE | FRONT UPGRADE 1 | FRONT UPGRADE 2 | REAR FD MF | REAR COMPOUND RECOMMENDED | REAR DF | REAR OE | REAR UPGRADE | KITS KG |
|---|---|---|---|---|---|---|---|---|---|---|---|---|---|---|---|---|
| **MV AGUSTA** | | | | | | | | | | | | | | | | |
| BRUTALE 675 | 675 | 12 | | FD176 | G1375 | 2 | DF830 | CW | | | FD220 | G1371 | DF831 | W | | |
| F3 675 | 675 | 11 | | FD176 | G1375 | 2 | DF830 | CW | | | FD220 | G1371 | DF831 | W | | |
| F3 675 SERIE ORO | 675 | 12 | | FD373 | G1375 | 2 | | | | | FD220 | G1371 | DF831 | W | | |
| BRUTALE AMERICA | 750 | 06 | | FD384 | G1375 | 2 | DF765 | CW | | | FD486 | G1054 | DF766 | W | | |
| BRUTALE CRC | 750 | 06 | | FD384 | G1375 | 2 | DF765 | CW | | | FD486 | G1054 | DF766 | W | | |
| BRUTALE MAMBA | 750 | 06 | | FD384 | G1375 | 2 | DF765 | CW | | | FD486 | G1054 | DF766 | W | | |
| BRUTALE S/ORO | 750 | 02 | | FD384 | G1054 | 2 | DF765 | CW | | | FD486 | G1054 | DF766 | W | | |
| F-4 | 750 | 99 | | FD384 | G1054 | 2 | DF765 | CW | | | FD486 | G1054 | DF766 | W | | |
| BRUTALE 800 | 800 | 13 | | FD176 | G1375 | 2 | DF830 | CW | | | FD220 | G1371 | DF831 | W | | |
| BRUTALE 800 RR | 800 | 15 | | FD176 | G1375 | 2 | DF830 | CW | | | FD220 | G1371 | DF831 | W | | |
| DRAGSTER 800 RR | 800 | 15 | | FD176 | G1375 | 2 | DF830 | CW | | | FD220 | G1371 | DF831 | W | | |
| RIVALE 800 | 800 | 13 | | FD475 | G1375 | 2 | DF830 | CW | | | FD220 | G1371 | DF831 | W | | |
| STRADALE 800 | 800 | 15 | | FD475 | G1370 | 2 | | | | | FD220 | G1371 | | | | |
| TURISMO VELOCE | 800 | 14 | | FD475 | G1370 | 2 | | | | | FD220 | G1371 | | | | |
| TURISMO VELOCE LUSSO | 800 | 14 | | FD475 | G1370 | 2 | | | | | FD220 | G1371 | | | | |
| BRUTALE 910 | 910 | 06 | | FD384 | G1375 | 2 | DF765 | CW | | | FD486 | G1054 | DF766 | W | | |
| BRUTALE 920 | 920 | 11 | | FD176 | G1375 | 2 | | | | | FD486 | G1054 | | | | |
| BRUTALE 989 | 1000 | 08 | 09 | FD176 | G1375 | 2 | | | | | FD486 | G1054 | | | | |
| BRUTALE 990 R | 1000 | 10 | | FD176 | G1375 | 2 | | | | | FD486 | G1054 | | | | |
| F-4 1000 | 1000 | 06 | 06 | FD262 | G1375 | 2 | | | | | FD486 | G1054 | | | | |
| F-4 1000 | 1000 | 07 | | FD373 | G1375 | 2 | | | | | FD486 | G1054 | | | | |
| F-4 MAMBA | 1000 | 06 | | FD384 | G1375 | 2 | DF765 | CW | | | FD486 | G1054 | DF766 | W | | |
| VELTRO 1 | 1000 | 06 | | FD384 | G1375 | 2 | DF765 | CW | | | FD486 | G1054 | DF766 | W | | |
| BRUTALE 1078 | 1078 | 08 | | FD373 | G1375 | 2 | | | | | FD486 | G1054 | | | | |
| F-4 312 RR | 1078 | 08 | | FD373 | G1375 | 2 | | | | | FD486 | G1054 | | | | |
| F-4 1078 RR | 1078 | 08 | 09 | FD373 | G1375 | 2 | | | | | FD486 | G1054 | | | | |
| BRUTALE CORSA 1090 | 1078 | 14 | | FD373 | G1375 | 2 | | | | | FD486 | G1054 | | | | |
| BRUTALE 1090 | 1078 | 13 | | FD176 | G1375 | 2 | | | | | FD220 | G1371 | | | | |
| BRUTALE 1090 R | 1078 | 10 | 12 | FD373 | G1375 | 2 | | | | | FD486 | G1054 | | | | |
| BRUTALE 1090 R | 1078 | 13 | | FD176 | G1375 | 2 | | | | | FD220 | G1371 | | | | |
| BRUTALE 1090 RR | 1078 | 13 | | FD373 | G1375 | 2 | | | | | FD220 | G1371 | | | | |
| F-4 1090 RR | 1078 | 10 | 11 | FD373 | G1375 | 2 | | | | | FD486 | G1054 | | | | |
| F-4 RR CORSA CORTA | 1078 | 12 | | FD373 | G1375 | 2 | | | | | FD486 | G1054 | | | | |
| **MZ/MuZ** | | | | | | | | | | | | | | | | |
| SAXON | 500 | 93 | | FD044 | G1054 | 1 | | | | | MF | | - | | | |
| SILVER STAR | 500 | 93 | | FD044 | G1054 | 1 | | | | | MF | | - | | | |
| SKORPION | 500 | 94 | | FD121 | G1054 | 1 | | | | | FD170 | G1054 | | | | |
| BAGHIRA | 660 | 00 | | FD074 | G1054 | 1 | | | | | FD075 | G1054 | | | | |
| MASTIFF | 660 | 00 | | FD074 | G1054 | 1 | | | | | FD075 | G1054 | | | | |
| 1000 S | 1000 | 01 | | FD176 | G1054 | 2 | DF660 | CW | CRW | | FD220 | G1054 | | | | |
| **NORTON** | | | | | | | | | | | | | | | | |
| 952 COMANDO | 952 | 04 | | FD068 | G1054 | 2 | | | | | FD220 | G1054 | | | | |
| COMMANDO 961 CAFE RACER | 961 | 10 | | FD262 | G1370 | 2 | DF660 | CW | CRW | | FD220 | G1371 | | | | |
| COMMANDO 961 SE | 961 | 10 | | FD068 | G1370 | 2 | DF660 | CW | CRW | | FD220 | G1371 | | | | |
| COMMANDO 961 SF | 961 | 13 | | FD262 | G1370 | 2 | DF660 | CW | CRW | | FD220 | G1371 | | | | |
| COMMANDO 961 SPORT | 961 | 10 | | FD176 | G1370 | 2 | DF660 | CW | CRW | | FD220 | G1371 | | | | |
| **P.G.O.** | | | | | | | | | | | | | | | | |
| G-MAX | 150 | 05 | | FD068 | G1054 | 1 | | | | | FD145 | G1054 | | | | |
| LIBRA 150 | 150 | 09 | | FD188 | G1054 | 1 | | | | | MF | | - | | | |
| T-REX 150 4-T | 150 | 01 | | FD188 | G1054 | 1 | DF037 | W | RW | FLS | MF | | - | | | |
| G-MAX | 250 | 06 | | FD068 | G1054 | 1 | | | | | FD145 | G1054 | | | | |
| **PEUGEOT** | | | | | | | | | | | | | | | | |
| DJANGO EVASION | 150 | 14 | | FD086 | G1054 | 1 | | | | | FD220 | G1054 | | | | |
| DJANGO HERITAGE | 150 | 14 | | FD086 | G1054 | 1 | | | | | FD220 | G1054 | | | | |
| ELYSEO 150 | 150 | 01 | | FD162 | G1054 | 1 | DF864 | W | | | FD270 | G1054 | DF864 | W | | |
| LOOXOR | 150 | 02 | | FD065 | G1054 | 1 | | | | | FD065 | G1054 | DF649 | W | | |
| TWEET 150 | 150 | 10 | | FD188 | G1054 | 1 | | | | | FD200 | G1054 | | | | |
| LXR 200 | 200 | 10 | | FD188 | G1054 | 1 | | | | | FD399 | G1054 | | | | |
| GEO 250 RS | 250 | 10 | | FD187 | G1054 | 1 | | | | | FD270 | G1054 | | | | |
| GEOPOLIS 250 PREMIUM | 250 | 06 | | FD277 | G1054 | 1 | | | | | FD277 | G1054 | | | | |
| SATELIS 250 CITY | 250 | 06 | | FD220 | G1054 | 1 | | | | | FD200 | G1054 | | | | |
| SATELIS 250 RS | 250 | 10 | | FD187 | G1054 | 1 | | | | | FD187 | G1054 | | | | |
| SV 250 | 250 | 01 | 02 | FD207 | G1054 | 1 | DF007 | W | | | MF044 | G2165 | - | | | |
| SV 250 | 250 | 03 | | FD207 | G1054 | 1 | DF007 | W | | | FD134 | G1054 | DF013 | W | | |
| GEO STYLE 300 | 300 | 10 | | FD187 | G1054 | 1 | | | | | FD187 | G1380 | | | | |
| GEOPOLIS 300 | 300 | 11 | | FD187 | G1054 | 1 | | | | | FD187 | G1380 | | | | |
| SATELIS 300i | 300 | 13 | | FD187 | G1054 | 1 | | | | | FD187 | G1380 | | | | |
| GEO 400 RS | 400 | 10 | | FD140 | G1054 | 1 | | | | | FD187 | G1054 | | | | |
| GEOPOLIS 400 | 400 | 07 | | FD187 | G1054 | 1 | | | | | FD187 | G1380 | | | | |
| METROPOLIS 400i | 400 | 12 | | FD138 | G1054 | 2 | | | | | FD086 | G1054 | | | | |
| SATELIS 400 | 400 | 07 | | FD140 | G1054 | 2 | | | | | FD220 | G1054 | | | | |
| SATELIS 400 ABS PBS | 400 | 07 | | FD140 | G1054 | 1 | | | | | FD220 | G1054 | | | | |

OE discs → W FLW CW Special discs → WLL WS RW RWS FLS FRS CRW

| BRAND & MODEL • MARCA Y MODELO<br>MARCA E MODELLO • MARQUE ET MODÉLE | C.C. | YEAR | | FRONT FD MF | FRONT COMPOUND RECOMMENDED | FRONT N° | FRONT DF | FRONT OE | FRONT UPGRADE 1 | FRONT UPGRADE 2 | REAR FD MF | REAR COMPOUND RECOMMENDED | REAR DF | REAR OE | REAR UPGRADE | KITS KG |
|---|---|---|---|---|---|---|---|---|---|---|---|---|---|---|---|---|
| SATELIS 500 | 500 | 06 | | FD220 | G1054 | 2 | DF667 | W | | | FD220 | G1380 | DF666 | W | | |
| SATELIS 500 ABS PBS | 500 | 07 | | FD140 | G1054 | 2 | | | | | FD220 | G1054 | | | | |
| SATELIS 500 | 500 | 07 | 09 | FD140 | G1054 | 1 | | | | | FD220 | G1054 | | | | |
| SATELIS 500 | 500 | 10 | | FD140 | G1054 | 1 | | | | | FD187 | G1054 | | | | |
| **PETRONAS** | | | | | | | | | | | | | | | | |
| FP 1 | 1000 | 05 | | FD262 | G1375 | 2 | | | | | FD220 | G1371 | | | | |
| **PIAGGIO** | | | | | | | | | | | | | | | | |
| HEXAGON | 150 | 94 | 99 | FD153 | G1054 | 1 | | | | | MF636 | G2165 | - | | | |
| HEXAGON GTX 150 (G) | 150 | 00 | | FD162 | G1054 | 1 | DF650 | W | RW | | FD263 | G1054 | DF650 | W | RW | |
| HEXAGON GTX 150 (H) | 150 | 00 | | FD277 | G1054 | 1 | DF650 | W | RW | | FD263 | G1054 | DF650 | W | RW | |
| LIBERTY 4-T | 150 | 00 | | FD200 | G1054 | 1 | DF704 | W | FLW | | MF | | - | | | |
| SKIPPER | 150 | 93 | 97 | FD152 | G1054 | 1 | DF650 | W | RW | | MF636 | G2165 | - | | | |
| SKIPPER LX (G) | 150 | 98 | 99 | FD162 | G1054 | 1 | DF737 | W | | | MF | | - | | | |
| SKIPPER LX (H) | 150 | 98 | 99 | FD277 | G1054 | 1 | DF737 | W | | | MF | | - | | | |
| SKR 150 ST 4T (G) | 150 | 00 | | FD162 | G1054 | 1 | DF737 | W | | | MF | | - | | | |
| SKR 150 ST 4T (H) | 150 | 00 | | FD277 | G1054 | 1 | DF737 | W | | | MF | | - | | | |
| VESPA ET4 | 150 | 01 | | FD200 | G1054 | 1 | DF650 | W | RW | | MF636 | G2165 | - | | | |
| VESPA S 150 | 150 | 09 | | FD200 | G1054 | 1 | DF650 | W | RW | | MF | | - | | | |
| VESPA SUPER SPORT ABS | 150 | 15 | | FD277 | G1054 | 1 | DF704 | W | FLW | | FD200 | G1054 | | | | |
| HEXAGON GTX 180 (G) | 180 | 00 | 00 | FD162 | G1054 | 1 | DF650 | W | RW | | FD263 | G1054 | DF650 | W | RW | |
| HEXAGON GTX 180 (H) | 180 | 00 | 00 | FD277 | G1054 | 1 | DF650 | W | RW | | FD263 | G1054 | DF650 | W | RW | |
| HEXAGON LXT 180 (G) | 180 | 98 | 99 | FD162 | G1054 | 1 | DF650 | W | RW | | MF | | - | | | |
| HEXAGON LXT 180 (H) | 180 | 98 | 99 | FD277 | G1054 | 1 | DF650 | W | RW | | MF | | - | | | |
| SUPER HEXAGON GTX 180 (G) | 180 | 01 | | FD162 | G1054 | 1 | | | | | FD263 | G1054 | DF704 | W | FLW | |
| SUPER HEXAGON GTX 180 (H) | 180 | 01 | | FD277 | G1054 | 1 | | | | | FD263 | G1054 | DF704 | W | FLW | |
| X 9 AMALFI | 180 | 01 | | FD220 | G1054 | 2 | DF666 | W | | | FD220 | G1054 | DF666 | W | | |
| BEVERLY 200 4T (G) | 200 | 02 | | FD162 | G1054 | 1 | DF667 | W | | | FD162 | G1054 | DF667 | W | | |
| BEVERLY 200 4T (H) | 200 | 02 | | FD277 | G1054 | 1 | DF667 | W | | | FD277 | G1054 | DF667 | W | | |
| CARNABY 200 | 200 | 07 | | FD277 | G1054 | 2 | DF667 | W | | | FD277 | G1054 | DF667 | W | | |
| LIBERTY | 200 | 04 | | FD200 | G1054 | 1 | | | | | MF | | - | | | |
| VESPA GRAN TURISMO (G) | 200 | 03 | | FD162 | G1054 | 1 | DF704 | W | FLW | | FD263 | G1054 | DF704 | W | FLW | |
| VESPA GRAN TURISMO (H) | 200 | 03 | | FD277 | G1054 | 1 | DF704 | W | FLW | | FD263 | G1054 | DF704 | W | FLW | |
| X 8 | 200 | 04 | | FD277 | G1054 | 1 | DF667 | W | | | FD343 | G1054 | DF666 | W | | |
| X 9 | 200 | 01 | 02 | FD220 | G1054 | 2 | DF666 | W | | | FD220 | G1054 | DF666 | W | | |
| X 9 EVOLUTION IZQ. | 200 | 03 | | FD277 | G1054 | 2 | DF667 | W | | | | | | | | |
| X 9 EVOLUTION DER. | 200 | 03 | | FD334 | G1054 | 2 | DF667 | W | | | FD220 | G1054 | DF666 | W | | |
| BEVERLY 250 4T (H) | 250 | 04 | | FD277 | G1054 | 1 | DF667 | W | | | FD277 | G1054 | DF667 | W | | |
| CARNABY 250 | 250 | 09 | | FD277 | G1054 | 2 | DF666 | W | | | FD277 | G1054 | DF666 | W | | |
| HEXAGON GT 250 4-T (G) | 250 | 98 | 99 | FD162 | G1054 | 1 | DF650 | W | RW | | MF451 | G2165 | - | | | |
| HEXAGON GT 250 4-T (H) | 250 | 98 | 99 | FD277 | G1054 | 1 | DF650 | W | RW | | MF451 | G2165 | - | | | |
| HEXAGON GTX 250 (G) | 250 | 00 | | FD162 | G1054 | 1 | DF650 | W | RW | | FD263 | G1054 | DF650 | W | RW | |
| HEXAGON GTX 250 (H) | 250 | 00 | | FD277 | G1054 | 1 | DF650 | W | RW | | FD263 | G1054 | DF650 | W | RW | |
| MP 3 250 | 250 | 06 | 08 | FD200 | G1054 | 2 | DF714 | W | | | FD343 | G1054 | DF666 | W | | |
| MP 3 250 LT | 250 | 09 | | FD200 | G1054 | 2 | DF714 | W | | | FD334 | G1054 | DF666 | W | | |
| VESPA GTE 250 I | 250 | 05 | | FD277 | G1054 | 1 | DF704 | W | FLW | | FD343 | G1054 | DF704 | W | FLW | |
| X 7 | 250 | 08 | | FD277 | G1054 | 1 | | | | | FD334 | G1054 | | | | |
| X 8 | 250 | 06 | | FD277 | G1054 | 1 | DF667 | W | | | FD343 | G1054 | DF666 | W | | |
| X 9 | 250 | 00 | | FD220 | G1054 | 2 | DF666 | W | | | FD220 | G1054 | DF666 | W | | |
| X 9 EVOLUTION LEFT/IZQ. | 250 | 04 | | FD277 | G1054 | 2 | DF666 | W | | | | | | | | |
| X 9 EVOLUTION RIGHT/DER. | 250 | 04 | | FD334 | G1054 | 2 | DF666 | W | | | FD220 | G1054 | DF666 | W | | |
| X EVO 250 | 250 | 08 | | FD277 | G1054 | 1 | DF667 | W | | | FD277 | G1054 | DF666 | W | | |
| BEVERLY 300 | 300 | 10 | | FD277 | G1054 | 1 | | | | | FD334 | G1380 | DF666 | W | | |
| BEVERLY TOURER 300 | 300 | 09 | | FD277 | G1054 | 1 | DF667 | W | | | FD334 | G1380 | DF667 | W | | |
| CARNABY CRUISER 300 i.e. | 300 | 09 | | FD277 | G1054 | 1 | DF667 | W | | | FD277 | G1380 | DF667 | W | | |
| MP 3 300 LT SPORT | 300 | 11 | | FD200 | G1054 | 2 | DF714 | W | | | FD334 | G1380 | DF666 | W | | |
| MP 3 300 YOURBAN | 300 | 11 | | FD200 | G1054 | 2 | DF714 | W | | | FD334 | G1380 | DF666 | W | | |
| MP 3 300 ie YOURBAN | 300 | 13 | | FD200 | G1054 | 2 | DF714 | W | | | FD334 | G1380 | DF666 | W | | |
| VESPA GTS 300 i.e. SUPER | 300 | 09 | | FD277 | G1054 | 1 | DF704 | W | FLW | | FD343 | G1380 | DF704 | W | FLW | |
| X 7 | 300 | 10 | | FD277 | G1054 | 1 | DF667 | W | | | FD334 | G1380 | DF666 | W | | |
| BEVERLY SPORT TOURER | 350 | 12 | | FD245 | G1054 | 1 | | | | | FD334 | G1380 | | | | |
| X 10 LEFT/IZQ | 350 | 12 | | FD277 | G1054 | 2 | | | | | | | | | | |
| X 10 RIGHT/DER | 350 | 12 | | FD334 | G1054 | 2 | | | | | FD343 | G1380 | | | | |
| BEVERLY 400 i.e. | 400 | 06 | | FD138 | G1054 | 1 | DF667 | W | | | FD220 | G1380 | DF666 | W | | |
| MP 3 400 i.e. | 400 | 07 | | FD220 | G1054 | 2 | DF714 | W | | | FD277 | G1380 | DF666 | W | | |
| MP 3 400 LT | 400 | 09 | | FD200 | G1054 | 2 | DF714 | W | | | FD277 | G1380 | DF666 | W | | |
| X 8 i.e.w. LEFT/IZQ. | 400 | 06 | | FD277 | G1054 | 2 | DF666 | W | | | | | | | | |
| X 8 i.e.w. RIGHT/DER. | 400 | 06 | | FD334 | G1054 | 2 | DF666 | W | | | FD220 | G1380 | DF666 | W | | |
| X EVO 400 LEFT/IZQ. | 400 | 08 | | FD277 | G1054 | 2 | DF666 | W | | | | | | | | |
| X EVO 400 RIGHT/DER. | 400 | 08 | | FD334 | G1054 | 2 | DF666 | W | | | FD277 | G1380 | DF666 | W | | |
| BEVERLY 500 | 500 | 03 | | FD220 | G1054 | 2 | DF667 | W | | | FD220 | G1380 | DF666 | W | | |
| MP 3 500 SPORT | 500 | 10 | | FD200 | G1054 | 2 | DF714 | W | | | FD277 | G1380 | DF666 | W | | |
| X 9 | 500 | 01 | 02 | FD220 | G1054 | 2 | DF667 | W | | | FD220 | G1380 | DF666 | W | | |
| X 9 EVOLUTION | 500 | 03 | | FD138 | G1054 | 2 | DF667 | W | | | FD220 | G1380 | DF666 | W | | |



**OE:** Original equipment (original replacement disc) • **OE:** Equipo original (disco de remplazo del original) For other models years previous to 1990 visit **www.galferonline.es** • Para otros modelos anteriores al año 1990 visitar **www.galferonline.es**
For consult TÜV (ABE) type approvals visit **www.galfermoto.com --> DOWNALOAD --> TÜV CERTIFICATIONS** • Para consultar las homologaciones TÜV (ABE) visitar **www.galfermoto.com --> DESCARGAS --> CERTIFICACIONES TÜV**

| BRAND & MODEL • MARCA Y MODELO<br>MARCA E MODELLO • MARQUE ET MODÉLE | C.C. | YEAR | | FRONT FD MF | FRONT COMPOUND RECOMMENDED | FRONT N° | FRONT DF | FRONT OE | FRONT UPGRADE 1 | FRONT UPGRADE 2 | REAR FD MF | REAR COMPOUND RECOMMENDED | REAR DF | REAR OE | REAR UPGRADE | KITS KG |
|---|---|---|---|---|---|---|---|---|---|---|---|---|---|---|---|---|
| X 9 i.e. | 500 | 07 | | FD138 | G1054 | 2 | DF667 | W | | | FD220 | G1380 | DF666 | W | | |
| X 10 LEFT/IZQ | 500 | 12 | | FD277 | G1054 | 2 | | | | | | | | | | |
| X 10 RIGHT/DER | 500 | 12 | | FD334 | G1054 | 2 | | | | | FD343 | G1380 | | | | |
| **POLARIS** | | | | | | | | | | | | | | | | |
| V 92 C | 1500 | 00 | | FD176 | G1054 | 2 | | | | | FD172 | G1054 | | | | |
| V 92 SC | 1500 | 00 | | FD176 | G1054 | 2 | | | | | FD172 | G1054 | | | | |
| **PVM** | | | | | | | | | | | | | | | | |
| RACING CALIPER | | 90 | | FD139 | G1054 | 1 | | | | | | | | | | |
| **RENAULT** | | | | | | | | | | | | | | | | |
| FULLTIME | 150 | 02 | | FD153 | G1054 | 1 | | | | | FD200 | G1054 | | | | |
| KOURANOS | 250 | 02 | | FD153 | G1054 | 1 | | | | | FD200 | G1054 | | | | |
| **RIEJU** | | | | | | | | | | | | | | | | |
| TANGO TRAIL 250 | 250 | 09 | | FD220 | G1054 | 1 | DF677 | W | FLW | FLS | FD065 | G1054 | DF675 | W | | |
| **ROYAL ENFIELD** | | | | | | | | | | | | | | | | |
| BULLET CLASIC | 500 | 09 | | FD187 | G1054 | 1 | DF459 | W | | | MF | | - | | | |
| CLUBMAN | 500 | 09 | | FD187 | G1054 | 1 | DF459 | W | | | MF | | - | | | |
| EFI | 500 | 09 | | FD187 | G1054 | 1 | DF459 | W | | | MF | | - | | | |
| EFI DE LUXE | 500 | 09 | | FD187 | G1054 | 1 | DF459 | W | | | MF | | - | | | |
| KIT ES | 500 | 09 | | FD187 | G1054 | 1 | DF459 | W | | | MF | | - | | | |
| TRAIL | 500 | 09 | | FD187 | G1054 | 1 | DF459 | W | | | MF | | - | | | |
| **SACHS** | | | | | | | | | | | | | | | | |
| TITAN 650 | 650 | 03 | | FD068 | G1054 | 1 | | | | | FD012 | G1054 | | | | |
| b-805 | 800 | 03 | | FD068 | G1054 | 1 | | | | | FD012 | G1054 | | | | |
| ROADSTER s-805 | 800 | 03 | | FD068 | G1054 | 1 | | | | | FD012 | G1054 | | | | |
| **SCORPA** | | | | | | | | | | | | | | | | |
| T-RIDE 250 F | 250 | 08 | | FD409 | G1054 | 1 | | | | | FD410 | G1054 | | | | |
| **SHERCO** | | | | | | | | | | | | | | | | |
| X-RIDE | 290 | 13 | | FD075 | G1054 | 1 | DF697 | | | | FD075 | G1054 | DF698 | W | | |
| **SIAMOTO** | | | | | | | | | | | | | | | | |
| CAPRI | 180 | 99 | | FD065 | G1054 | 1 | | | | | FD065 | G1054 | | | | |
| **SUMCO** | | | | | | | | | | | | | | | | |
| MS 150 | 150 | 06 | | FD169 | G1054 | 1 | | | | | FD214 | G1054 | | | | |
| KIRA KR 200 TR | 200 | 06 | | FD162 | G1054 | 1 | | | | | FD065 | G1054 | | | | |
| 200 KR | 200 | 05 | | FD162 | G1054 | 1 | | | | | FD065 | G1054 | | | | |
| 250 TWIN | 250 | 05 | | FD266 | G1054 | 1 | | | | | MF | | - | | | |
| **SUZUKI** | | | | | | | | | | | | | | | | |
| AN VECSTAR | 150 | 98 | | FD177 | G1054 | 1 | | | | | MF301 | G2165 | - | | | |
| AVENIS 150 | 150 | 99 | | FD177 | G1054 | 1 | | | | | MF | | - | | | |
| EPICURO 150 | 150 | 99 | | FD177 | G1054 | 1 | | | | | MF | | - | | | |
| SIXTEEN | 150 | 08 | | FD344 | G1054 | 1 | DF365 | W | | | FD315 | G1054 | DF365 | W | | |
| UH 150 BURGMAN | 150 | 02 | | FD138 | G1054 | 1 | DF318 | W | | | FD220 | G1054 | DF319 | W | | |
| RG 200 GAMMA | 200 | 92 | | FD107 | G1054 | 1 | | | | | FD111 | G1054 | | | | |
| RG 200 WOLF | 200 | 92 | | FD090 | G1054 | 1 | | | | | FD111 | G1054 | | | | |
| RV 200 VAN VAN | 200 | 03 | | FD179 | G1054 | 1 | | | | | MF | | - | | | |
| UH 200 BURGMAN | 200 | 07 | 13 | FD344 | G1054 | 1 | DF364 | W | | | FD315 | G1054 | DF364 | W | | |
| UH 200 BURGMAN | 200 | 14 | | FD117 | G1054 | 1 | DF364 | W | | | FD315 | G1054 | DF364 | W | | |
| UH 200 BURGMAN ABS | 200 | 14 | | FD117 | G1054 | 1 | DF364 | W | | | FD315 | G1054 | DF364 | W | | |
| AN 250 BURGMAN | 250 | 98 | 02 | FD222 | G1054 | 1 | DF341 | W | | | FD400 | G1054 | DF342 | W | | |
| AN 250 BURGMAN | 250 | 03 | 06 | FD222 | G1054 | 1 | DF344 | W | | | FD400 | G1054 | DF345 | | | |
| AN 250 BURGMAN / SKY WAVE DER. | 250 | 07 | 08 | FD145 | G1054 | 2 | DF331 | FLW | | | | | | | | |
| AN 250 BURGMAN / SKY WAVE IZQ. | 250 | 07 | 08 | FD187 | G1054 | 2 | DF331 | FLW | | | FD400 | G1054 | DF360 | W | | |
| CJ 250 SKY WAVE / Type S | 250 | 03 | | FD222 | G1054 | 1 | DF344 | W | | | FD401 | G1054 | DF345 | | | |
| BANDIT 250 | 250 | 90 | | FD090 | G1054 | 1 | | | | | FD045 | G1054 | DF316 | W | | |
| GEMMA 250 (JAP) | 250 | 09 | | FD140 | G1054 | 1 | | | | | FD401 | G1054 | | | | |
| GN 250 | 250 | 93 | | FD046 | G1054 | 1 | | | | | MF151 | G2165 | - | | | |
| GSX 250 FX | 250 | 02 | | FD179 | G1054 | 1 | DF167 | CW | | | FD167 | G1054 | | | | |
| GW 250 INAZUMA | 250 | 12 | 14 | FD266 | G1054 | 1 | | | | | FD457 | G1054 | | | | |
| GW 250 INAZUMA F | 250 | 15 | | FD266 | G1054 | 1 | | | | | FD457 | G1054 | DF352 | W | | |
| GW 250 INAZUMA S | 250 | 13 | 14 | FD266 | G1054 | 1 | | | | | FD457 | G1054 | | | | |
| GW 250 INAZUMA Z | 250 | 15 | | FD266 | G1054 | 1 | | | | | FD457 | G1054 | DF352 | W | | |
| GZ 250 MARAUDER | 250 | 98 | 07 | FD209 | G1054 | 1 | | | | | MF | | - | | | |
| GZ 250 MARAUDER | 250 | 08 | | FD209 | G1054 | 1 | | | | | MF | | - | | | |
| INTRUDER LC 250 | 250 | 00 | | FD209 | G1054 | 1 | | | | | MF | | - | | | |
| RGV 250 GAMMA | 250 | 91 | 96 | FD107 | G1054 | 2 | DF321 | CW | CRW | | FD104 | G1054 | DF312 | W | | |
| TU 250 GRASSTRACKER/BIG BOY | 250 | 00 | | FD174 | G1054 | 1 | | | | | MF | | - | | | |
| TU 250 X | 250 | 97 | 01 | FD209 | G1054 | 1 | | | | | MF151 | G2165 | - | | | |
| TU 250 X | 250 | 02 | | FD174 | G1054 | 1 | | | | | MF151 | G2165 | - | | | |
| VL 250 MARAUDER | 250 | 00 | | FD209 | G1054 | 1 | | | | | MF | | - | | | |
| GOOSE 350 | 350 | 92 | | FD107 | G1054 | 1 | | | | | FD111 | G1054 | | | | |
| AN 400 BURGMAN | 400 | 98 | 02 | FD222 | G1054 | 1 | DF341 | W | | | FD400 | G1380 | DF342 | W | | |
| AN 400 BURGMAN | 400 | 03 | 05 | FD222 | G1054 | 1 | DF344 | W | | | FD400 | G1380 | DF345 | | | |
| AN 400 BURGMAN IZQ./LEFT | 400 | 06 | | FD187 | G1054 | 1 | DF344 | W | | | | | | | | |
| AN 400 BURGMAN DER./RIGHT | 400 | 06 | | FD145 | G1054 | 1 | DF344 | W | | | FD401 | G1380 | DF345 | | | |

OE discs → W FLW CW Special discs → WLL WS RW RWS FLS FRS CRW

| BRAND & MODEL • MARCA Y MODELO<br>MARCA E MODELLO • MARQUE ET MODÉLE | C.C. | YEAR | | FRONT FD MF | FRONT COMPOUND RECOMMENDED | FRONT N° | FRONT DF | FRONT OE | FRONT UPGRADE 1 | FRONT UPGRADE 2 | REAR FD MF | REAR COMPOUND RECOMMENDED | REAR DF | REAR OE | REAR UPGRADE | KITS KG |
|---|---|---|---|---|---|---|---|---|---|---|---|---|---|---|---|---|
| AN 400 SKY WAVE IZQ./LEFT | 400 | 07 | | FD187 | G1054 | 1 | DF344 | W | | | | | | | | |
| AN 400 SKY WAVE DER./RIGHT | 400 | 07 | | FD145 | G1054 | 1 | DF344 | W | | | FD401 | G1380 | DF345 | | | |
| BOULEVARD 400 | 400 | 05 | | FD179 | G1054 | 1 | | | | | MF | | - | | | |
| CK SKY WAVE 400 | 400 | 03 | | FD222 | G1054 | 1 | DF344 | W | | | FD400 | G1380 | DF345 | | | |
| GS 400 E | 400 | 91 | | FD090 | G1054 | 1 | | | | | FD045 | G1054 | | | | |
| GSR 400 | 400 | 06 | | FD107 | G1054 | 2 | DF351 | CW | CRW | | FD359 | G1054 | DF352 | W | | |
| GSX 400 F BANDIT | 400 | 90 | | FD090 | G1054 | 1 | DF314 | CW | | | FD111 | G1054 | DF316 | W | | |
| GSX 400 IMPULSE (Japan) | 400 | 94 | 98 | FD266 | G1054 | 2 | DF317 | CW | | | FD045 | G1054 | DF316 | W | | |
| GSX 400 IMPULSE (Japan) | 400 | 99 | | FD176 | G1054 | 2 | DF317 | CW | | | FD045 | G1054 | DF316 | W | | |
| GSX 400 INAZUMA | 400 | 00 | | FD176 | G1054 | 2 | DF317 | CW | | | FD111 | G1054 | DF307 | W | | |
| GSX 400 S KATANA | 400 | 92 | | FD107 | G1054 | 2 | | | | | FD111 | G1054 | | | | |
| GSX R 400 | 400 | 90 | | FD090 | G1054 | 2 | | | | | FD045 | G1054 | | | | |
| GSX R 400 R | 400 | 90 | | FD099 | G1054 | 2 | DF321 | CW | CRW | | FD045 | G1054 | DF312 | W | | |
| RF 400 R | 400 | 93 | | FD266 | G1054 | 2 | DF317 | CW | | | FD045 | G1054 | DF307 | W | | |
| SFV 400 GLADIUS LEFT/IZQ | 400 | 10 | | FD174 | G1054 | 2 | DF337 | CW | | | | | | | | |
| SFV 400 GLADIUS RIGHT/DER | 400 | 10 | | FD179 | G1054 | 2 | DF337 | CW | | | FD103 | G1054 | DF307 | W | | |
| SV 400 /S DER. | 400 | 99 | | FD179 | G1054 | 2 | DF317 | CW | | | | | | | | |
| SV 400 /S IZ. | 400 | 99 | | FD174 | G1054 | 2 | DF317 | CW | | | FD111 | G1054 | DF307 | W | | |
| VS 400 INTRUDER | 400 | 94 | | FD066 | G1054 | 1 | DF324 | | | | MF | | - | | | |
| GS 500 E | 500 | 96 | | FD179 | G1054 | 1 | DF314 | CW | | | FD111 | G1054 | DF316 | W | | |
| GS 500 F | 500 | 06 | | FD179 | G1054 | 1 | DF314 | CW | | | FD111 | G1054 | DF316 | W | | |
| GSF 600 N BANDIT | 600 | 95 | 99 | FD266 | G1054 | 2 | DF317 | CW | | | FD111 | G1054 | DF307 | W | | |
| GSF 600 N BANDIT DER. | 600 | 00 | | FD179 | G1054 | 2 | DF317 | CW | | | | | | | | |
| GSF 600 N BANDIT IZQ. | 600 | 00 | | FD174 | G1054 | 2 | DF317 | CW | | | FD111 | G1054 | DF307 | W | | |
| GSR 600 | 600 | 06 | | FD107 | G1054 | 2 | DF351 | CW | CRW | | FD359 | G1054 | DF352 | W | | |
| GSX 600 F | 600 | 91 | 97 | FD109 | G1054 | 2 | DF317 | CW | | | FD111 | G1054 | DF316 | W | | |
| GSX 600 F DER. (KATANA 600 USA) | 600 | 98 | 03 | FD179 | G1054 | 2 | DF317 | CW | | | | | | | | |
| GSX 600 F IZQ. (KATANA 600 USA) | 600 | 98 | 03 | FD174 | G1054 | 2 | DF317 | CW | | | FD111 | G1054 | DF307 | W | | |
| GSX 600 F DER. (KATANA 600 USA) | 600 | 04 | | FD179 | G1054 | 2 | DF337 | CW | | | | | | | | |
| GSX 600 F IZQ. (KATANA 600 USA) | 600 | 04 | | FD174 | G1054 | 2 | DF337 | CW | | | FD111 | G1054 | DF307 | W | | |
| GSX 600 R | 600 | 92 | 96 | FD099 | G1054 | 2 | | | | | FD045 | G1054 | | | | |
| GSX R 600 SRAD | 600 | 97 | 03 | FD107 | G1054 | 2 | DF320 | CW | CRW | | FD111 | G1054 | DF339 | W | FLW | |
| GSX R 600 SRAD | 600 | 04 | 05 | FD325 | G1054 | 2 | DF322 | CW | CRW | | FD267 | G1054 | DF339 | W | FLW | |
| GSX R 600 | 600 | 06 | 07 | FD325 | G1054 | 2 | DF348 | CW | CRW | | FD359 | G1054 | DF339 | W | FLW | |
| GSX R 600 | 600 | 08 | 10 | FD325 | G1375 | 2 | DF358 | CW | CRW | | FD359 | G1371 | DF339 | W | FLW | |
| GSX R 600 | 600 | 11 | | FD373 | G1375 | 2 | DF358 | CW | CRW | | FD363 | G1371 | DF339 | W | FLW | |
| RF 600 R | 600 | 93 | | FD266 | G1054 | 2 | DF317 | CW | | | FD111 | G1054 | DF307 | W | | |
| VS 600 GL INTRUDER | 600 | 95 | | FD066 | G1054 | 1 | DF324 | | | | MF304 | G2165 | - | | | |
| AN 650 BURGMAN | 650 | 02 | 03 | FD266 | G1380 | 2 | DF330 | W | | | FD401 | G1380 | | | | |
| AN 650 BURGMAN | 650 | 04 | 12 | FD266 | G1380 | 2 | DF331 | FLW | | | FD401 | G1380 | DF363 | W | | |
| AN 650 BURGMAN | 650 | 13 | | FD266 | G1380 | 2 | | | | | FD401 | G1380 | | | | |
| CP SKY WAVE 650 | 650 | 03 | 03 | FD266 | G1380 | 2 | DF330 | W | | | FD401 | G1380 | | | | |
| CP SKY WAVE 650 | 650 | 04 | | FD266 | G1380 | 2 | DF344 | W | | | FD401 | G1380 | | | | |
| DL 650 V-STORM DER. | 650 | 04 | 06 | FD179 | G1054 | 2 | DF323 | CW | CRW | | | | | | | |
| DL 650 V-STORM IZQ. | 650 | 04 | 06 | FD174 | G1054 | 2 | DF323 | CW | CRW | | FD134 | G1054 | DF361 | W | | |
| DL 650 V-STORM DER. | 650 | 07 | | FD179 | G1054 | 2 | DF351 | CW | CRW | | | | | | | |
| DL 650 V-STORM IZQ. | 650 | 07 | | FD174 | G1054 | 2 | DF351 | CW | CRW | | FD134 | G1054 | DF361 | W | | |
| DL 650 V-STORM DER./ABS | 650 | 07 | | FD179 | G1054 | 2 | DF351 | CW | CRW | | | | | | | |
| DL 650 V-STORM IZQ./ABS | 650 | 07 | | FD174 | G1054 | 2 | DF351 | CW | CRW | | FD134 | G1054 | DF361 | W | | |
| DL 650 V-STORM XPEDITION DER. | 650 | 11 | | FD179 | G1054 | 2 | DF351 | CW | CRW | | | | | | | |
| DL 650 V-STORM XPEDITION IZQ. | 650 | 11 | | FD174 | G1054 | 2 | DF351 | CW | CRW | | FD134 | G1054 | DF361 | W | | |
| DL 650 V-STORM XPEDITION DER./ABS | 650 | 11 | 12 | FD179 | G1054 | 2 | DF351 | CW | CRW | | | | | | | |
| DL 650 V-STORM XPEDITION IZQ./ABS | 650 | 11 | 12 | FD174 | G1054 | 2 | DF351 | CW | CRW | | FD134 | G1054 | DF361 | W | | |
| DL 650 V-STORM XPEDITION DER./ABS | 650 | 13 | 13 | FD179 | G1054 | 2 | DF351 | CW | CRW | | | | | | | |
| DL 650 V-STORM XPEDITION IZQ./ABS | 650 | 13 | 13 | FD174 | G1054 | 2 | DF351 | CW | CRW | | FD134 | G1054 | DF361 | W | | |
| DL 650 V-STORM XT DER./ABS | 650 | 15 | | FD179 | G1054 | 2 | DF351 | CW | CRW | | | | | | | |
| DL 650 V-STORM XT IZQ./ABS | 650 | 15 | | FD174 | G1054 | 2 | DF351 | CW | CRW | | FD134 | G1054 | DF361 | W | | |
| DR 650 R, RS | 650 | 90 | 91 | FD101 | G1054 | 1 | DF304 | | | | FD120 | G1054 | | | | |
| DR 650 RL,RM,RSL | 650 | 91 | 91 | FD101 | G1054 | 1 | DF315 | W | | | FD120 | G1054 | | | | |
| DR 650 RSE | 650 | 92 | 93 | FD101 | G1054 | 1 | DF315 | W | | | FD120 | G1054 | | | | |
| DR 650 RE | 650 | 94 | 95 | FD101 | G1054 | 1 | | | | | FD120 | G1054 | | | | |
| GSF 650 BANDIT /S DER. | 650 | 05 | 05 | FD179 | G1054 | 2 | DF337 | CW | | | | | | | | |
| GSF 650 BANDIT /S IZQ. | 650 | 05 | 05 | FD174 | G1054 | 2 | DF337 | CW | | | FD267 | G1054 | DF307 | W | | |
| GSF 650 BANDIT /S/ ABS DER. | 650 | 06 | | FD179 | G1054 | 2 | DF351 | CW | CRW | | | | | | | |
| GSF 650 BANDIT /S/ ABS IZQ. | 650 | 06 | | FD174 | G1054 | 2 | DF351 | CW | CRW | | FD134 | G1054 | DF352 | W | | |
| GSF 650 BANDIT /S/ | 650 | 07 | | FD107 | G1054 | 2 | DF351 | CW | CRW | | FD134 | G1054 | DF352 | W | | |
| GSF 650 BANDIT /S/ ABS | 650 | 07 | | FD107 | G1054 | 2 | DF351 | CW | CRW | | FD134 | G1054 | DF352 | W | | |
| GSX 650 F | 650 | 08 | | FD107 | G1054 | 2 | DF351 | CW | CRW | | FD134 | G1054 | DF352 | W | | |
| LS 650 SAVAGE | 650 | 90 | 91 | FD209 | G1054 | 1 | | | | | MF303 | G2165 | - | | | |
| LS 650 P | 650 | 92 | 04 | FD209 | G1054 | 1 | | | | | MF303 | G2165 | - | | | |
| LS 650 (S40 BOULEVAR USA) | 650 | 05 | 08 | FD209 | G1054 | 1 | | | | | MF303 | G2165 | - | | | |
| LS 650 (S40 BOULEVAR USA) | 650 | 09 | | FD209 | G1054 | 1 | | | | | MF303 | G2165 | - | | | |
| SFV 650 GLADIUS LEFT/IZQ | 650 | 09 | | FD174 | G1054 | 2 | DF334 | CW | | | | | | | | |



**OE:** Original equipment (original replacement disc) • **OE:** Equipo original (disco de remplazo del original) For other models years previous to 1990 visit **www.galferonline.es** • Para otros modelos anteriores al año 1990 visitar **www.galferonline.es**
For consult TÜV (ABE) type approvals visit **www.galfermoto.com --> DOWNLOAD --> TÜV CERTIFICATIONS** • Para consultar las homologaciones TÜV (ABE) visitar **www.galfermoto.com --> DESCARGAS --> CERTIFICACIONES TÜV**

| BRAND & MODEL • MARCA Y MODELO<br>MARCA E MODELLO • MARQUE ET MODÉLE | C.C. | YEAR | | FRONT FD MF | FRONT COMPOUND RECOMMENDED | FRONT N° | FRONT DF | FRONT OE | FRONT UPGRADE 1 | FRONT UPGRADE 2 | REAR FD MF | REAR COMPOUND RECOMMENDED | REAR DF | REAR OE | REAR UPGRADE | KITS KG |
|---|---|---|---|---|---|---|---|---|---|---|---|---|---|---|---|---|
| SFV 650 GLADIUS RIGHT/DER | 650 | 09 | | FD179 | G1054 | 2 | DF334 | CW | | | FD457 | G1054 | DF352 | W | | |
| SFV 650 GLADIUS ABS LEFT/IZQ | 650 | 10 | | FD174 | G1054 | 2 | DF334 | CW | | | | | | | | |
| SFV 650 GLADIUS ABS RIGHT/DER | 650 | 10 | | FD179 | G1054 | 2 | DF334 | CW | | | FD457 | G1054 | DF352 | W | | |
| SV 650 /S DER. | 650 | 99 | 02 | FD179 | G1054 | 2 | DF317 | CW | | | | | | | | |
| SV 650 /S IZQ. | 650 | 99 | 02 | FD174 | G1054 | 2 | DF317 | CW | | | FD111 | G1054 | DF307 | W | | |
| SV 650 /S DER. | 650 | 03 | 03 | FD179 | G1054 | 2 | DF337 | CW | | | | | | | | |
| SV 650 /S IZQ. | 650 | 03 | 03 | FD174 | G1054 | 2 | DF337 | CW | | | FD134 | G1054 | DF339 | W | FLW | |
| SV 650 /S DER. | 650 | 04 | 06 | FD179 | G1054 | 2 | DF337 | CW | | | | | | | | |
| SV 650 /S IZQ. | 650 | 04 | 06 | FD174 | G1054 | 2 | DF337 | CW | | | FD134 | G1054 | DF339 | W | FLW | |
| SV 650 ABS DER. | 650 | 07 | | FD179 | G1054 | 2 | DF334 | CW | | | | | | | | |
| SV 650 ABS IZQ. | 650 | 07 | | FD174 | G1054 | 2 | DF334 | CW | | | FD134 | G1054 | DF352 | W | | |
| XF 650 FREEWIND | 650 | 97 | | FD179 | G1054 | 1 | DF315 | W | | | FD103 | G1054 | DF328 | W | | |
| GSR 750 LEFT/IZQ | 750 | 11 | | FD174 | G1054 | 2 | DF351 | CW | CRW | | | | | | | |
| GSR 750 RIGHT/DER | 750 | 11 | | FD179 | G1054 | 2 | DF351 | CW | CRW | | FD134 | G1054 | DF352 | W | | |
| GSR 750 ABS LEFT/IZQ | 750 | 11 | | FD174 | G1054 | 2 | DF351 | CW | CRW | | | | | | | |
| GSR 750 ABS RIGHT/DER | 750 | 11 | | FD179 | G1054 | 2 | DF351 | CW | CRW | | FD134 | G1054 | DF352 | W | | |
| GSX 750 F DER. | 750 | 98 | | FD179 | G1054 | 2 | DF321 | CW | CRW | | | | | | | |
| GSX 750 F IZQ | 750 | 98 | | FD174 | G1054 | 2 | DF321 | CW | CRW | | FD111 | G1054 | DF307 | W | | |
| GSX 750 F VS DER. (KATANA 750 USA) | 750 | 99 | 02 | FD179 | G1054 | 2 | DF317 | CW | | | | | | | | |
| GSX 750 F VS IZQ. (KATANA 750 USA) | 750 | 99 | 02 | FD174 | G1054 | 2 | DF317 | CW | | | FD111 | G1054 | DF307 | W | | |
| GSX 750 F DER. | 750 | 03 | | FD174 | G1054 | 2 | DF337 | CW | | | | | | | | |
| GSX 750 F IZQ | 750 | 03 | | FD179 | G1054 | 2 | DF337 | CW | | | FD111 | G1054 | DF307 | W | | |
| GSX R 750 L, LM, W | 750 | 91 | 93 | FD099 | G1054 | 2 | DF690 | CW | CRW | | FD111 | G1054 | DF307 | W | | |
| GSX R 750 W | 750 | 94 | 95 | FD156 | G1054 | 2 | DF690 | CW | CRW | | FD111 | G1054 | DF307 | W | | |
| GSX R 750 SRAD | 750 | 96 | 99 | FD156 | G1054 | 2 | DF320 | CW | CRW | | FD111 | G1054 | DF339 | W | FLW | |
| GSX R 750 SRAD | 750 | 00 | 03 | FD107 | G1054 | 2 | DF320 | CW | CRW | | FD111 | G1054 | DF339 | W | FLW | |
| GSX R 750 SRAD | 750 | 04 | 05 | FD325 | G1054 | 2 | DF322 | CW | CRW | | FD267 | G1054 | DF339 | W | FLW | |
| GSX R 750 | 750 | 06 | 07 | FD325 | G1375 | 2 | DF348 | CW | CRW | | FD359 | G1371 | DF339 | W | FLW | |
| GSX R 750 | 750 | 08 | 10 | FD325 | G1375 | 2 | DF358 | CW | CRW | | FD359 | G1371 | DF339 | W | FLW | |
| GSX R 750 | 750 | 11 | | FD373 | G1375 | 2 | DF358 | CW | CRW | | FD363 | G1371 | DF339 | W | FLW | |
| BOULEVARD 800 | 800 | 05 | | FD179 | G1054 | 1 | | | | | MF | | - | | | |
| DR 800 S, SL BIG | 800 | 90 | 91 | FD101 | G1054 | 1 | DF315 | W | | | FD120 | G1054 | | | | |
| DR 800 S BIG | 800 | 92 | | FD090 | G1054 | 1 | DF315 | W | | | FD117 | G1370 | | | | |
| VL 800 VOLUSIA | 800 | 01 | | FD179 | G1054 | 1 | | | | | MF | | - | | | |
| VN 800 VULCAN | 800 | 95 | | FD047 | G1054 | 1 | | | | | MF | | - | | | |
| VS 800 GL | 800 | 93 | | FD066 | G1054 | 1 | DF324 | | | | MF304 | G2165 | - | | | |
| VS 800 GL, INTRUDER | 800 | 91 | 92 | FD078 | G1054 | 1 | DF324 | | | | MF304 | G2165 | - | | | |
| VS 800 GL, N, INTRUDER | 800 | 93 | 99 | FD066 | G1054 | 1 | DF324 | | | | MF304 | G2165 | - | | | |
| VS INTRUDER M 800 | 800 | 05 | | FD179 | G1054 | 1 | | | | | MF | | - | | | |
| VX 800 | 800 | 90 | | FD090 | G1054 | 1 | DF335 | | | | FD022 | G1054 | DF336 | | | |
| VZ 800 MARAUDER | 800 | 97 | | FD179 | G1054 | 1 | DF321 | CW | CRW | | MF304 | G2165 | - | | | |
| ZX 800 | 800 | 92 | | FD090 | G1054 | 1 | | | | | FD022 | G1054 | | | | |
| RF 900 R | 900 | 94 | 95 | FD099 | G1054 | 2 | DF314 | CW | | | FD189 | G1054 | DF307 | W | | |
| RF 900 RS2 | 900 | 96 | | FD099 | G1054 | 2 | DF690 | CW | CRW | | FD189 | G1054 | DF307 | W | | |
| DL 1000 V-STORM DER. | 1000 | 01 | 13 | FD179 | G1054 | 2 | DF323 | CW | CRW | | | | | | | |
| DL 1000 V-STORM IZQ. | 1000 | 01 | 13 | FD174 | G1054 | 2 | DF323 | CW | CRW | | FD134 | G1054 | DF361 | W | | |
| DL 1000 V-STORM ABS | 1000 | 14 | | FD325 | G1370 | 2 | DF351 | CW | CRW | | FD359 | G1371 | DF361 | W | | |
| GSX-S 1000 ABS | 1000 | 15 | | FD373 | G1370 | 2 | DF358 | CW | CRW | | FD134 | G1371 | | | | |
| GSX-S 1000 F ABS | 1000 | 15 | | FD373 | G1370 | 2 | DF358 | CW | CRW | | FD134 | G1371 | | | | |
| GSX R 1000 | 1000 | 01 | 02 | FD156 | G1375 | 2 | DF320 | CW | CRW | | FD267 | G1371 | DF339 | W | FLW | |
| GSX R 1000 | 1000 | 03 | 03 | FD290 | G1375 | 2 | DF322 | CW | CRW | | FD267 | G1371 | DF339 | W | FLW | |
| GSX R 1000 | 1000 | 04 | 04 | FD325 | G1375 | 2 | DF322 | CW | CRW | | FD267 | G1371 | DF339 | W | FLW | |
| GSX R 1000 | 1000 | 05 | 06 | FD325 | G1375 | 2 | DF348 | CW | CRW | | FD267 | G1371 | DF339 | W | FLW | |
| GSX R 1000 | 1000 | 07 | 08 | FD325 | G1375 | 2 | DF348 | CW | CRW | | FD359 | G1371 | DF339 | W | FLW | |
| GSX R 1000 | 1000 | 09 | 11 | FD325 | G1375 | 2 | DF358 | CW | CRW | | FD363 | G1371 | DF339 | W | FLW | |
| GSX R 1000 | 1000 | 12 | | FD373 | G1375 | 2 | DF358 | CW | CRW | | FD363 | G1371 | DF339 | W | FLW | |
| SV 1000 | 1000 | 03 | | FD107 | G1054 | 2 | DF323 | CW | CRW | | FD134 | G1054 | DF339 | W | FLW | |
| SV 1000 / S / SZ | 1000 | 03 | | FD107 | G1054 | 2 | DF323 | CW | CRW | | FD134 | G1054 | DF339 | W | FLW | |
| TL 1000 R | 1000 | 98 | | FD156 | G1054 | 2 | DF320 | CW | CRW | | FD111 | G1054 | DF339 | W | FLW | |
| TL 1000 S | 1000 | 97 | | FD107 | G1054 | 2 | DF320 | CW | CRW | | FD111 | G1054 | DF339 | W | FLW | |
| GSX 1100 G | 1100 | 90 | 92 | FD090 | G1054 | 2 | | | | | FD022 | G1054 | | | | |
| GSX 1100 G | 1100 | 93 | | FD090 | G1054 | 2 | DF333 | | | | FD111 | G1054 | | | | |
| GSX 1100 KATANA | 1100 | 02 | | FD156 | G1054 | 2 | | | | | FD267 | G1054 | | | | |
| GSX R 1100 W | 1100 | 93 | | FD156 | G1054 | 2 | DF690 | CW | CRW | | FD111 | G1054 | DF307 | W | | |
| GS 1200 SS | 1200 | 01 | | FD156 | G1054 | 2 | DF314 | CW | | | FD267 | G1054 | DF307 | W | | |
| GSF 1200 BANDIT | 1200 | 95 | 99 | FD099 | G1054 | 2 | DF314 | CW | | | FD111 | G1054 | DF307 | W | | |
| GSF 1200 BANDIT / S | 1200 | 00 | 05 | FD156 | G1054 | 2 | DF314 | CW | | | FD111 | G1054 | DF307 | W | | |
| GSF 1200 BANDIT / S | 1200 | 06 | | FD107 | G1054 | 2 | DF351 | CW | CRW | | FD134 | G1054 | DF352 | W | | |
| GSF 1200 BANDIT ABS | 1200 | 06 | | FD107 | G1054 | 2 | DF351 | CW | CRW | | FD134 | G1054 | DF352 | W | | |
| GSX 1200 | 1200 | 99 | | FD176 | G1054 | 2 | DF314 | CW | | | FD111 | G1054 | | | | |
| INAZUMA 1200 | 1200 | 98 | | FD176 | G1054 | 2 | DF314 | CW | | | FD111 | G1054 | DF307 | W | | |
| GSF 1250 BANDIT A/S/SA | 1250 | 07 | 08 | FD107 | G1054 | 2 | DF351 | CW | CRW | | FD134 | G1054 | DF352 | W | | |
| GSF 1250 BANDIT FA | 1250 | 09 | | FD107 | G1054 | 2 | DF351 | CW | CRW | | FD134 | G1054 | DF352 | W | | |

| BRAND & MODEL • MARCA Y MODELO<br>MARCA E MODELLO • MARQUE ET MODÉLE | C.C. | YEAR | | FRONT FD MF | FRONT COMPOUND RECOMMENDED | FRONT N° | FRONT DF | FRONT OE | FRONT UPGRADE 1 | FRONT UPGRADE 2 | REAR FD MF | REAR COMPOUND RECOMMENDED | REAR DF | REAR OE | REAR UPGRADE | KITS KG |
|---|---|---|---|---|---|---|---|---|---|---|---|---|---|---|---|---|
| GSF 1250 BANDIT /SA | 1250 | 10 | | FD107 | G1370 | 2 | DF351 | CW | CRW | | FD134 | G1054 | DF352 | W | | |
| B-KING | 1300 | 07 | | FD331 | G1370 | 2 | DF351 | CW | CRW | | FD359 | G1371 | DF355 | W | | |
| GSX 1300 R HAYABUSA | 1300 | 99 | 07 | FD156 | G1054 | 2 | DF320 | CW | CRW | | FD111 | G1054 | DF307 | W | | |
| GSX 1300 R HAYABUSA | 1300 | 08 | 13 | FD325 | G1054 | 2 | DF351 | CW | CRW | | FD359 | G1054 | DF355 | W | | |
| GSX 1300 R HAYABUSA | 1300 | 14 | | FD373 | G1375 | 2 | DF351 | CW | CRW | | FD359 | G1371 | DF355 | W | | |
| GSX 1400 | 1400 | 01 | | FD156 | G1370 | 2 | DF320 | CW | CRW | | FD267 | G1371 | DF346 | W | | |
| VS 1400 GLP | 1400 | 92 | | FD078 | G1054 | 1 | DF324 | | | | FD111 | G1371 | | | | |
| VS 1400 (S83 USA) | 1400 | 04 | | FD078 | G1054 | 1 | | | | | FD078 | G1054 | | | | |
| M 1500 LEFT/IZQ | 1500 | 09 | | FD174 | G1375 | 2 | | | | | | | | | | |
| M 1500 RIGHT/DER | 1500 | 09 | | FD179 | G1370 | 2 | | | | | FD179 | G1370 | | | | |
| VL 1500 INTRUDER LEGENDARY EASSIC | 1500 | 98 | 99 | FD066 | G1054 | 1 | | | | | FD083 | G1054 | | | | |
| VL 1500 INTRUDER LEGENDARY CLASSIC | 1500 | 00 | 01 | FD066 | G1054 | 1 | | | | | FD083 | G1054 | | | | |
| VL 1500 INTRUDER LEFT/IZQ | 1500 | 02 | | FD174 | G1054 | 2 | | | | | | | | | | |
| VL 1500 INTRUDER RIGHT/DER | 1500 | 02 | | FD179 | G1054 | 2 | | | | | FD107 | G1054 | | | | |
| VL 1500 INTRUDER T | 1500 | 13 | | FD140 | G1054 | 1 | | | | | FD179 | G1054 | | | | |
| TL 1600 S | 1600 | 97 | | FD107 | G1370 | 2 | | | | | FD111 | G1371 | | | | |
| VZ 1600 | 1600 | 04 | | FD156 | G1054 | 2 | | | | | FD179 | G1370 | | | | |
| VZ 1600 INTRUDER | 1600 | 05 | | FD290 | G1054 | 2 | | | | | FD179 | G1370 | | | | |
| M 109 R BOULEVARD | 1800 | 06 | | FD325 | G1370 | 2 | DF348 | CW | CRW | | FD179 | G1370 | DF359 | CW | | |
| M 1800 RB | 1800 | 14 | | FD325 | G1370 | 2 | | | | | FD179 | G1370 | | | | |
| VL 1800 VOLUSIA | 1800 | 02 | | FD179 | G1054 | 1 | | | | | MF | | - | | | |
| VZR 1800 INTRUDER | 1800 | 08 | | FD325 | G1370 | 2 | DF348 | CW | CRW | | FD179 | G1370 | DF359 | CW | | |
| **SUZUKI INDONESIA** | | | | | | | | | | | | | | | | |
| SATRIA F 150 | 150 | 11 | | FD117 | G1054 | 1 | | | | | FD259 | G1054 | | | | |
| GW 250 INAZUMA | 250 | 12 | | FD266 | G1054 | 1 | | | | | FD103 | G1054 | | | | |
| **SUZUKI MALASIA** | | | | | | | | | | | | | | | | |
| BELANG R 150 | 150 | 11 | | FD117 | G1054 | 1 | DF332 | W | WS | | FD259 | G1054 | | | | |
| **SYM** | | | | | | | | | | | | | | | | |
| EURO MX | 150 | 02 | | FD412 | G1054 | 1 | | | | | MF | | - | | | |
| JOYRIDE | 150 | 01 | | FD412 | G1054 | 1 | | | | | FD261 | G1054 | | | | |
| RS 150 | 150 | 06 | | FD412 | G1054 | 1 | | | | | FD145 | G1054 | | | | |
| VS 150 | 150 | 06 | | FD412 | G1054 | 1 | | | | | MF | | - | | | |
| H 200 SE | 200 | 06 | | FD188 | G1054 | 1 | | | | | FD399 | G1054 | | | | |
| HD 200 S EVO | 200 | 06 | | FD188 | G1054 | 1 | | | | | FD399 | G1054 | | | | |
| JOYRIDE | 200 | 01 | | FD412 | G1054 | 1 | | | | | FD261 | G1054 | | | | |
| JOYRIDE 200i EVO | 200 | 13 | | FD412 | G1054 | 1 | | | | | FD261 | G1054 | | | | |
| GTS 250 | 250 | 07 | | FD222 | G1054 | 1 | | | | | FD399 | G1054 | | | | |
| JOYMAX 250 i | 250 | 07 | | FD275 | G1054 | 1 | | | | | FD399 | G1054 | | | | |
| JOYMAX 250 i | 250 | 07 | | FD275 | G1054 | 1 | | | | | FD399 | G1054 | | | | |
| VOYAGER 250 | 250 | 05 | | FD275 | G1054 | 1 | | | | | FD295 | G1054 | | | | |
| WOLF SB 250 Ni | 250 | 15 | | FD399 | G1054 | 1 | | | | | FD336 | G1054 | | | | |
| CITYCOM 300 i | 300 | 08 | | FD277 | G1054 | 1 | | | | | FD277 | G1380 | | | | |
| JOYMAX 300 i EVO | 300 | 09 | | FD275 | G1054 | 1 | | | | | FD399 | G1380 | | | | |
| WOLF SB 300 | 300 | 15 | | FD399 | G1054 | 1 | | | | | FD336 | G1054 | | | | |
| WOLF SB 300 CR | 300 | 15 | | FD399 | G1054 | 1 | | | | | FD336 | G1054 | | | | |
| MAX SYM 400i DER | 400 | 11 | | FD481 | G1054 | 2 | | | | | FD483 | G1054 | | | | |
| MAX SYM 400i IZQ | 400 | 11 | | FD482 | G1054 | 2 | | | | | | | | | | |
| MAX SYM 400i ABS | 400 | 14 | | FD481 | G1054 | 2 | | | | | FD483 | G1054 | | | | |
| GT 500 | 500 | 05 | | FD222 | G1054 | 1 | | | | | FD261 | G1054 | | | | |
| MAX SYM 600i ABS | 600 | 15 | | FD481 | G1054 | 2 | | | | | FD483 | G1054 | | | | |
| MAX SYM 600i SPORT ABS | 600 | 15 | | FD482 | G1054 | 2 | | | | | FD483 | G1054 | | | | |
| **TGB** | | | | | | | | | | | | | | | | |
| PLATFORM 150 | 150 | 06 | | FD188 | G1054 | 1 | | | | | MF | | - | | | |
| SUNSET 150 | 150 | 07 | | FD094 | G1054 | 1 | | | | | MF | | - | | | |
| 42 RACING 150 | 150 | 06 | | FD252 | G1054 | 1 | | | | | MF453 | G2165 | - | | | |
| 101 | 150 | 05 | | FD188 | G1054 | 1 | | | | | MF453 | G2165 | - | | | |
| 409 F | 150 | 02 | 05 | FD094 | G1054 | 1 | | | | | MF | | - | | | |
| 409 F | 150 | 06 | | FD252 | G1054 | 1 | | | | | MF453 | G2165 | - | | | |
| X - MOTION 250i | 250 | 08 | | | | 1 | | | | | FD399 | G1054 | | | | |
| **TM** | | | | | | | | | | | | | | | | |
| SMM 530 F | 530 | 14 | | FD262 | G1054 | 1 | | | | | FD286 | G1054 | DF829 | W | WLL | |
| SMR 530 F | 530 | 14 | | FD262 | G1054 | 1 | | | | | FD286 | G1054 | DF829 | W | WLL | |
| SMX 530 F | 530 | 10 | 14 | FD262 | G1054 | 1 | | | | | FD286 | G1054 | DF829 | W | WLL | |
| SMX 660 F | 660 | 04 | 14 | FD262 | G1054 | 1 | DF828 | W | WLL | RW | FD286 | G1054 | DF829 | W | WLL | |
| SMX 660 F | 660 | 15 | | FD262 | G1054 | 1 | DF828 | W | FLW | | FD286 | G1054 | DF840 | W | | |
| **TRIUMPH** | | | | | | | | | | | | | | | | |
| DAYTONA 600 | 600 | 03 | | FD099 | G1375 | 2 | | | | | FD103 | G1371 | DF013 | W | | |
| SPEED FOUR | 600 | 03 | | FD099 | G1054 | 2 | | | | | FD103 | G1054 | DF013 | W | | |
| TT 600 | 600 | 00 | | FD099 | G1054 | 2 | | | | | FD103 | G1054 | DF013 | W | | |
| DAYTONA 650 | 650 | 03 | 05 | FD099 | G1375 | 2 | DF877 | CW | | | FD103 | G1371 | DF013 | W | | |
| DAYTONA TRIPLE | 675 | 06 | 08 | FD331 | G1375 | 2 | DF876 | CW | CRW | | FD103 | G1371 | DF013 | W | | |
| DAYTONA 675 | 675 | 09 | | FD414 | G1375 | 2 | DF876 | CW | CRW | | FD103 | G1371 | DF013 | W | | |
| DAYTONA 675 SE | 675 | 09 | | FD414 | G1375 | 2 | DF876 | CW | CRW | | FD103 | G1371 | DF013 | W | | |



**OE:** Original equipment (original replacement disc) • **OE:** Equipo original (disco de remplazo del original) For other models years previous to 1990 visit **www.galferonline.es** • Para otros modelos anteriores al año 1990 visitar **www.galferonline.es**
For consult TÜV (ABE) type approvals visit **www.galfermoto.com --> DOWNALOAD --> TÜV CERTIFICATIONS** • Para consultar las homologaciones TÜV (ABE) visitar **www.galfermoto.com --> DESCARGAS --> CERTIFICACIONES TÜV**

| BRAND & MODEL • MARCA Y MODELO<br>MARCA E MODELLO • MARQUE ET MODÉLE | C.C. | YEAR | | FRONT FD MF | FRONT COMPOUND RECOMMENDED | FRONT N° | FRONT DF | FRONT OE | FRONT UPGRADE 1 | FRONT UPGRADE 2 | REAR FD MF | REAR COMPOUND RECOMMENDED | REAR DF | REAR OE | REAR UPGRADE | KITS KG |
|---|---|---|---|---|---|---|---|---|---|---|---|---|---|---|---|---|
| DAYTONA 675 R | 675 | 11 | 12 | FD373 | G1375 | 2 | DF876 | CW | CRW | | FD103 | G1371 | DF013 | W | | |
| DAYTONA 675 R | 675 | 13 | | FD373 | G1375 | 2 | DF906 | CW | CRW | | FD103 | G1371 | DF907 | W | | |
| STREET TRIPLE | 675 | 07 | | FD140 | G1054 | 2 | DF876 | CW | CRW | | FD103 | G1054 | DF013 | W | | |
| STREET TRIPLE R | 675 | 09 | 12 | FD331 | G1054 | 2 | DF876 | CW | CRW | | FD103 | G1054 | DF013 | W | | |
| STREET TRIPLE R | 675 | 13 | | FD331 | G1054 | 2 | DF906 | CW | CRW | | FD103 | G1054 | DF907 | W | | |
| STREET TRIPLE RX | 675 | 15 | | FD331 | G1054 | 2 | DF906 | CW | CRW | | FD103 | G1054 | DF907 | W | | |
| BONNEVILLE AMERICA | 750 | 02 | | FD140 | G1054 | 1 | | | | | FD140 | G1054 | | | | |
| DAYTONA 750 SPORT | 750 | 91 | | FD099 | G1054 | 2 | DF651 | CW | | | FD117 | G1054 | DF875 | W | | |
| TRIDENT 750 (left) | 750 | 93 | | FD086 | G1054 | 2 | DF652 | CW | | | | | | | | |
| TRIDENT 750 (right) | 750 | 93 | | FD117 | G1054 | 2 | DF652 | CW | | | FD117 | G1054 | DF875 | W | | |
| SPEEDMASTER | 790 | 03 | | FD140 | G1054 | 2 | | | | | FD140 | G1054 | | | | |
| AMERICA | 800 | 05 | | FD266 | G1054 | 1 | | | | | FD086 | G1054 | | | | |
| BONNEVILLE /T100 | 800 | 04 | 05 | FD140 | G1054 | 1 | DF914 | CW | | | FD086 | G1396 | DF915 | W | | |
| TIGER 800 | 800 | 11 | | FD266 | G1370 | 2 | | | | | FD103 | G1371 | DF915 | W | | |
| TIGER 800 XC | 800 | 11 | 14 | FD266 | G1370 | 2 | | | | | FD103 | G1371 | DF915 | W | | |
| TIGER 800 XCx | 800 | 15 | | FD266 | G1370 | 2 | | | | | FD103 | G1371 | DF915 | W | | |
| TIGER 800 XRx | 800 | 15 | | FD266 | G1370 | 2 | | | | | FD103 | G1371 | DF915 | W | | |
| BONNEVILLE /T100 | 850 | 05 | 07 | FD140 | G1054 | 1 | DF914 | CW | | | FD086 | G1396 | DF915 | W | | |
| BONNEVILLE EFI /T100 | 800 | 08 | | FD140 | G1054 | 1 | DF914 | CW | | | FD086 | G1396 | DF915 | W | | |
| BONNEVILLE SE | 850 | 09 | | FD140 | G1054 | 1 | DF914 | CW | | | FD086 | G1396 | DF915 | W | | |
| BONEVILLE ACE | 865 | 15 | | FD140 | G1054 | 1 | DF914 | CW | | | FD086 | G1054 | DF915 | W | | |
| BONEVILLE NEW CHURCH | 865 | 15 | | FD140 | G1054 | 1 | DF914 | CW | | | FD086 | G1054 | DF915 | W | | |
| BONEVILLE SPIRIT | 865 | 15 | | FD140 | G1054 | 1 | DF914 | CW | | | FD086 | G1054 | DF915 | W | | |
| SPEEDMASTER | 865 | 10 | | FD140 | G1054 | 2 | | | | | FD086 | G1396 | | | | |
| STEVE McQUEEN SE | 865 | 12 | | FD140 | G1054 | 1 | | | | | FD086 | G1054 | | | | |
| THRUXTON 865 | 865 | 04 | 07 | FD140 | G1054 | 1 | DF874 | CW | | | FD086 | G1054 | DF915 | W | | |
| THRUXTON 865 EFI | 865 | 08 | | FD140 | G1054 | 1 | DF874 | CW | | | FD086 | G1054 | DF915 | W | | |
| THRUXTON 865 ACE | 865 | 15 | | FD140 | G1054 | 1 | DF874 | CW | | | FD086 | G1054 | DF915 | W | | |
| ADVENTURER | 900 | 99 | | FD140 | G1054 | 2 | DF022 | W | | | FD140 | G1054 | | | | |
| DAYTONA 900 | 900 | 93 | 96 | FD099 | G1054 | 2 | DF651 | CW | | | FD117 | G1054 | DF875 | W | | |
| DAYTONA 900 T-595 | 900 | 97 | | FD099 | G1054 | 2 | DF653 | CW | | | FD086 | G1054 | DF013 | W | | |
| LEGEND TT | 900 | 99 | | FD266 | G1054 | 1 | DF022 | W | | | FD140 | G1054 | | | | |
| SCRAMBLER | 900 | 06 | 07 | FD140 | G1054 | 1 | DF914 | CW | | | FD086 | G1054 | DF915 | W | | |
| SPRINT 900 (left) | 900 | 93 | | FD086 | G1054 | 2 | DF651 | CW | | | | | | | | |
| SPRINT 900 (right) | 900 | 93 | | FD117 | G1054 | 2 | DF651 | CW | | | FD117 | G1054 | DF875 | W | | |
| SCRAMBLER EFI | 900 | 08 | | FD140 | G1054 | 1 | DF914 | CW | | | FD086 | G1054 | DF915 | W | | |
| THUNDERBIRD 900/SPORT | 900 | 95 | | FD266 | G1054 | 2 | DF914 | CW | | | FD140 | G1054 | DF916 | W | | |
| TIGER 900 (left) | 900 | 93 | 98 | FD086 | G1054 | 2 | DF005 | W | | | | | | | | |
| TIGER 900 (right) | 900 | 93 | 98 | FD117 | G1054 | 2 | DF005 | W | | | FD117 | G1370 | | | | |
| TRIDENT 900 (left) | 900 | 93 | | FD086 | G1054 | 2 | DF652 | CW | | | | | | | | |
| TRIDENT 900 (right) | 900 | 93 | | FD117 | G1054 | 2 | DF652 | CW | | | FD117 | G1054 | DF875 | W | | |
| TRIDENT 900 SPRINT | 900 | 95 | | FD099 | G1054 | 2 | | | | | FD117 | G1054 | DF875 | W | | |
| TROPHY 900 (left) | 900 | 92 | 93 | FD086 | G1054 | 2 | DF652 | CW | | | | | | | | |
| TROPHY 900 (right) | 900 | 92 | 93 | FD117 | G1054 | 2 | DF652 | CW | | | FD117 | G1054 | DF875 | W | | |
| TROPHY 900 | 900 | 94 | | FD099 | G1054 | 2 | DF651 | CW | | | FD117 | G1054 | DF875 | W | | |
| DAYTONA 955i | 955 | 99 | 00 | FD099 | G1054 | 2 | DF653 | CW | | | FD086 | G1054 | DF013 | W | | |
| DAYTONA 955i | 955 | 01 | 01 | FD099 | G1054 | 2 | DF653 | CW | | | FD103 | G1054 | DF013 | W | | |
| DAYTONA 955i | 955 | 02 | | FD099 | G1054 | 2 | DF655 | CW | | | FD103 | G1054 | DF013 | W | | |
| SPEED TRIPLE 955 i | 955 | 99 | 01 | FD099 | G1054 | 2 | DF651 | CW | | | FD086 | G1054 | DF013 | W | | |
| SPEED TRIPLE 955 i | 955 | 02 | | FD099 | G1054 | 2 | DF655 | CW | | | FD086 | G1054 | DF013 | W | | |
| SPRINT RS | 955 | 00 | | FD099 | G1054 | 2 | DF653 | CW | | | FD117 | G1370 | DF915 | W | | |
| SPRINT ST 955 | 955 | 99 | | FD099 | G1054 | 2 | DF653 | CW | | | FD086 | G1054 | DF915 | W | | |
| SPEED TRIPLE T-509 | 995 | 99 | | FD099 | G1054 | 2 | DF653 | CW | | | FD086 | G1054 | | | | |
| TIGER 955 | 955 | 99 | | FD140 | G1054 | 2 | | | | | FD117 | G1370 | | | | |
| SPEED TRIPLE 1050 | 1050 | 05 | 05 | FD262 | G1054 | 2 | DF661 | CW | CRW | | FD086 | G1054 | DF013 | W | | |
| SPEED TRIPLE 1050 | 1050 | 06 | 07 | FD331 | G1054 | 2 | DF661 | CW | CRW | | FD086 | G1054 | DF013 | W | | |
| SPEED TRIPLE 1050 | 1050 | 08 | 10 | FD262 | G1370 | 2 | | | | | FD086 | G1054 | DF013 | W | | |
| SPEED TRIPLE 1050 | 1050 | 11 | 11 | FD262 | G1370 | 2 | | | | | FD086 | G1054 | DF915 | W | | |
| SPEED TRIPLE R | 1050 | 12 | | FD373 | G1370 | 2 | | | | | FD086 | G1054 | DF013 | W | | |
| SPRINT ST 1050 | 1050 | 05 | 05 | FD099 | G1054 | 2 | | | | | FD086 | G1054 | DF915 | W | | |
| SPRINT ST 1050 | 1050 | 06 | | FD331 | G1370 | 2 | DF655 | CW | | | FD086 | G1054 | DF915 | W | | |
| TIGER 1050 | 1050 | 07 | | FD331 | G1370 | 2 | DF661 | CW | CRW | | FD117 | G1370 | DF915 | W | | |
| TIGER 1050 ABS | 1050 | 07 | | FD331 | G1370 | 2 | DF661 | CW | CRW | | FD117 | G1370 | DF915 | W | | |
| TIGER SPORT 1050 ABS | 1050 | 13 | | FD331 | G1370 | 2 | DF661 | CW | CRW | | FD117 | G1370 | | | | |
| DAYTONA 1100 SPORT | 1100 | 91 | | FD099 | G1054 | 2 | DF651 | CW | | | FD117 | G1054 | DF875 | W | | |
| 1200-3 (left) | 1200 | 93 | | FD086 | G1054 | 2 | DF651 | CW | | | | | | | | |
| 1200-3 (right) | 1200 | 93 | | FD117 | G1054 | 2 | DF651 | CW | | | FD117 | G1054 | DF875 | W | | |
| 1200-4 (left) | 1200 | 93 | | FD086 | G1054 | 2 | DF651 | CW | | | | | | | | |
| 1200-4 (right) | 1200 | 93 | | FD117 | G1054 | 2 | DF651 | CW | | | FD117 | G1054 | DF875 | W | | |
| TIGER EXPLORER | 1200 | 12 | | FD107 | G1370 | 2 | | | | | FD086 | G1054 | | | | |
| TROPHY 1200 (left) | 1200 | 91 | 93 | FD086 | G1054 | 2 | DF651 | CW | | | | | | | | |
| TROPHY 1200 (right) | 1200 | 91 | 93 | FD117 | G1054 | 2 | DF651 | CW | | | FD117 | G1054 | DF875 | W | | |
| TROPHY 1200 | 1200 | 94 | | FD099 | G1054 | 2 | DF651 | CW | | | FD117 | G1054 | DF875 | W | | |

| BRAND & MODEL • MARCA Y MODELO<br>MARCA E MODELLO • MARQUE ET MODÉLE | C.C. | YEAR | | FRONT FD MF | FRONT COMPOUND RECOMMENDED | FRONT N° | FRONT DF | FRONT OE | FRONT UPGRADE 1 | FRONT UPGRADE 2 | REAR FD MF | REAR COMPOUND RECOMMENDED | REAR DF | REAR OE | REAR UPGRADE | KITS KG |
|---|---|---|---|---|---|---|---|---|---|---|---|---|---|---|---|---|
| TROPHY 1200 | 1215 | 13 | | FD372 | G1370 | 2 | | | | | FD086 | G1054 | | | | |
| THUNDERBIRD 1600 | 1600 | 09 | | FD099 | G1375 | 2 | | | | | FD172 | G1370 | | | | |
| THUNDERBIRD COMMANDER | 1700 | 14 | | FD099 | G1375 | 2 | | | | | FD172 | G1370 | | | | |
| THUNDERBIRD STORM 1700 | 1700 | 11 | | FD099 | G1375 | 2 | | | | | FD172 | G1370 | | | | |
| ROCKET III | 2300 | 04 | | FD099 | G1375 | 2 | | | | | FD172 | G1370 | | | | |
| ROCKET III ROADSTER | 2300 | 10 | | FD099 | G1375 | 2 | | | | | FD172 | G1370 | | | | |
| **VENTO** | | | | | | | | | | | | | | | | |
| PHANTERA 150 | 150 | 06 | | FD095 | G1054 | 1 | | | | | MF | | - | | | |
| PHANTOM r4i | 150 | 06 | | FD095 | G1054 | 1 | | | | | MF | | - | | | |
| **VERTEMATI** | | | | | | | | | | | | | | | | |
| 492 SUPERMOTARD | 500 | 99 | 00 | FD068 | G1054 | 1 | | | | | FD165 | G1054 | | | | |
| **VICTORY** | | | | | | | | | | | | | | | | |
| CORY NESS CROOS COUNTRY | 1500 | 11 | | FD331 | G1370 | 2 | DF472 | CW | | | FD140 | G1054 | DF472 | CW | | |
| CROSS COUNTRY | 1500 | 10 | | FD331 | G1370 | 2 | DF472 | CW | | | FD140 | G1054 | DF472 | CW | | |
| CROSS ROADS | 1500 | 10 | | FD331 | G1370 | 2 | DF472 | CW | | | FD140 | G1054 | DF472 | CW | | |
| CRUISER | 1500 | 01 | | FD176 | G1375 | 1 | DF472 | CW | | | FD172 | G1370 | DF472 | CW | | |
| DE LUXE | 1500 | 01 | | FD176 | G1375 | 1 | DF472 | CW | | | FD172 | G1370 | DF472 | CW | | |
| GUNNER | 1700 | 15 | | FD331 | G1370 | 1 | DF472 | CW | | | FD172 | G1370 | DF472 | CW | | |
| HAMMER / S | 1500 | 01 | 07 | FD176 | G1375 | 2 | DF472 | CW | | | FD172 | G1370 | DF472 | CW | | |
| HAMMER / S | 1500 | 08 | | FD331 | G1370 | 2 | DF472 | CW | | | FD140 | G1054 | DF472 | CW | | |
| HIGH BALL | 1700 | 15 | | FD331 | G1370 | 2 | DF472 | CW | | | FD172 | G1370 | DF472 | CW | | |
| JACKPOT | 1500 | 10 | | FD331 | G1370 | 2 | DF472 | CW | | | FD140 | G1054 | DF472 | CW | | |
| JUDGE | 1700 | 15 | | FD331 | G1370 | 2 | DF472 | CW | | | FD172 | G1370 | DF472 | CW | | |
| KING PIN | 1500 | 08 | | FD331 | G1370 | 1 | DF472 | CW | | | FD140 | G1054 | DF472 | CW | | |
| SPORTCRUISER | 1500 | 01 | | FD176 | G1375 | 1 | DF472 | CW | | | FD172 | G1370 | DF472 | CW | | |
| TOURING CRUISER | 1500 | 03 | | FD176 | G1375 | 1 | DF472 | CW | | | FD172 | G1370 | DF472 | CW | | |
| VEGAS | 1500 | 03 | 07 | FD176 | G1375 | 1 | DF472 | CW | | | FD172 | G1370 | DF472 | CW | | |
| VEGAS | 1500 | 08 | | FD331 | G1370 | 1 | DF472 | CW | | | FD140 | G1054 | DF472 | CW | | |
| VISION 8 BALL | 1500 | 10 | | FD205 | G1375 | 2 | DF472 | CW | | | FD140 | G1054 | DF472 | CW | | |
| V92C | 1500 | 01 | | FD176 | G1375 | 1 | DF472 | CW | | | FD172 | G1370 | DF472 | CW | | |
| **VOR** | | | | | | | | | | | | | | | | |
| RC 503 | 503 | 01 | | FD176 | G1054 | 1 | DF886 | | | | FD165 | G1054 | DF887 | W | | |
| SM 503 | 503 | 00 | | FD068 | G1054 | 1 | DF886 | | | | FD165 | G1054 | DF887 | W | | |
| **VOXAN** | | | | | | | | | | | | | | | | |
| CAFÉ RACER | 1000 | 99 | | FD176 | G1054 | 2 | DF660 | CW | CRW | | FD220 | G1054 | | | | |
| CHARADE RACING | 1000 | 06 | | FD262 | G1054 | 2 | | | | | FD220 | G1054 | | | | |
| BOXER | 1000 | 00 | | FD176 | G1054 | 2 | DF660 | CW | CRW | | FD220 | G1054 | | | | |
| ROADSTER | 1000 | 99 | | FD176 | G1054 | 2 | DF660 | CW | CRW | | FD220 | G1054 | | | | |
| SCRAMBLER | 1000 | 00 | | FD176 | G1054 | 2 | DF660 | CW | CRW | | FD165 | G1054 | | | | |
| GTV 1200 | 1200 | 08 | | FD262 | G1370 | 2 | | | | | FD220 | G1371 | | | | |
| **YAMAHA** | | | | | | | | | | | | | | | | |
| CRYPTON-X T 135 | 135 | 08 | 14 | FD393 | G1054 | 1 | DF512 | CW | WS | | MF | | - | | | |
| FLY ONE | 150 | 92 | | FD079 | G1054 | 1 | | | | | MF640 | G2165 | - | | | |
| MAXTER 150 | 150 | 01 | | FD138 | G1054 | 1 | | | | | FD220 | G1054 | | | | |
| SP 150 MAGESTY | 150 | 01 | | FD138 | G1054 | 1 | DF492 | W | | | FD220 | G1054 | | | | |
| TEO´S 150 | 150 | 01 | | FD153 | G1054 | 1 | DF492 | W | | | MF640 | G2165 | - | | | |
| X - ENTER | 150 | 12 | | FD473 | G1054 | 1 | | | | | MF | | - | | | |
| SP 180 MAGESTY | 180 | 03 | | FD138 | G1054 | 1 | DF492 | W | | | FD220 | G1054 | | | | |
| TW 200 | 200 | 98 | | FD214 | G1054 | 1 | DF467 | W | | | MF640 | G2165 | - | | | |
| XT 225 | 225 | 92 | 00 | FD079 | G1054 | 1 | | | | | MF | | - | | | |
| XT 225 | 225 | 01 | | FD214 | G1054 | 1 | | | | | MF | | - | | | |
| R1-Z | 250 | 90 | | FD068 | G1054 | 1 | DF472 | CW | | | FD069 | G1054 | | | | |
| SEROW 250 | 250 | 04 | | FD214 | G1054 | 1 | DF451 | W | | | FD114 | G1054 | | | | |
| SP 250 MAGESTY | 250 | 96 | 97 | FD169 | G1054 | 1 | DF458 | W | | | MF457 | G2165 | - | | | |
| SP 250 DX MAGESTY | 250 | 98 | 99 | FD169 | G1054 | 1 | DF458 | W | | | FD214 | G1054 | DF490 | W | | |
| SP 250 DX MAGESTY | 250 | 00 | | FD169 | G1054 | 1 | DF458 | W | | | FD214 | G1054 | DF484 | W | | |
| SR 250, SP | 250 | 91 | | FD056 | G1054 | 1 | DF480 | | | | MF451 | G2165 | - | | | |
| TY 250 , Z, M | 250 | 93 | | FD065 | G1054 | 1 | | | | | FD065 | G1054 | | | | |
| TZ 250 | 250 | 90 | | FD099 | G1054 | 2 | DF472 | CW | | | FD163 | G1054 | | | | |
| WR 250 R | 250 | 08 | | FD164 | G1054 | 1 | | | | | FD286 | G1054 | | | | |
| X - CITY | 250 | 07 | | FD140 | G1054 | 1 | | | | | FD214 | G1054 | DF524 | W | | |
| X - MAX 250 | 250 | 05 | 09 | FD355 | G1054 | 1 | DF500 | W | | | FD214 | G1054 | DF524 | W | | |
| X - MAX 250 | 250 | 10 | | FD266 | G1054 | 1 | DF500 | W | | | FD214 | G1054 | DF524 | W | | KG500 |
| XG 250 TRICKER | 250 | 04 | | FD214 | G1054 | 1 | | | | | FD114 | G1054 | | | | |
| XT 250 X | 250 | 06 | | FD214 | G1054 | 1 | | | | | FD114 | G1054 | | | | |
| XTZ 250 X | 250 | 07 | | FD086 | G1054 | 1 | DF450 | W | | | FD114 | G1054 | | | | |
| XV 250 VIRAGO | 250 | 91 | 92 | FD127 | G1054 | 1 | DF480 | | | | MF451 | G2165 | - | | | |
| XV 250 VIRAGO | 250 | 93 | 95 | FD056 | G1054 | 1 | DF480 | | | | MF451 | G2165 | - | | | |
| XV 250 VIRAGO | 250 | 96 | 00 | FD169 | G1054 | 1 | DF459 | W | | | MF451 | G2165 | - | | | |
| XVS 250 DRAG STAR | 250 | 01 | | FD169 | G1054 | 1 | DF459 | W | | | MF640 | G2165 | - | | | |
| YBR 250 | 250 | 07 | | FD117 | G1054 | 1 | DF470 | W | | | MF640 | G2165 | - | | | |
| YS 250 FAZER | 250 | 06 | 10 | FD117 | G1054 | 1 | DF470 | W | | | MF640 | G2165 | - | | | |
| YS 250 FAZER | 250 | 11 | | FD117 | G1054 | 1 | DF470 | W | | | FD114 | G1054 | | | | |



**OE:** Original equipment (original replacement disc) • **OE:** Equipo original (disco de remplazo del original) For other models years previous to 1990 visit **www.galferonline.es** • Para otros modelos anteriores al año 1990 visitar **www.galferonline.es**
For consult TÜV (ABE) type approvals visit **www.galfermoto.com --> DOWNLOAD --> TÜV CERTIFICATIONS** • Para consultar las homologaciones TÜV (ABE) visitar **www.galfermoto.com --> DESCARGAS --> CERTIFICACIONES TÜV**

| BRAND & MODEL • MARCA Y MODELO<br>MARCA E MODELLO • MARQUE ET MODÉLE | C.C. | YEAR | | FRONT FD MF | FRONT COMPOUND RECOMMENDED | FRONT N° | FRONT DF | FRONT OE | FRONT UPGRADE 1 | FRONT UPGRADE 2 | REAR FD MF | REAR COMPOUND RECOMMENDED | REAR DF | REAR OE | REAR UPGRADE | KITS KG |
|---|---|---|---|---|---|---|---|---|---|---|---|---|---|---|---|---|
| YZF - R25 | 250 | 15 | | FD485 | G1054 | 1 | DF460 | CW | | | FD484 | G1054 | DF461 | W | | |
| VERSITY | 300 | 03 | | FD138 | G1054 | 1 | | | | | FD138 | G1380 | | | | |
| YZF - R3 | 320 | 15 | | FD485 | G1054 | 1 | DF460 | CW | | | FD484 | G1054 | DF461 | W | | |
| RD 350 R | 350 | 91 | | FD069 | G1054 | 2 | DF471 | W | | | FD069 | G1054 | DF471 | W | | |
| FZ 400 FAZER | 400 | 01 | | FD176 | G1054 | 2 | DF472 | CW | | | FD057 | G1054 | DF458 | W | | |
| FZR 400 RR | 400 | 90 | | FD178 | G1054 | 2 | DF472 | CW | | | FD069 | G1054 | DF468 | W | | |
| SP 400 MAGESTY | 400 | 04 | 04 | FD142 | G1054 | 1 | DF500 | W | | | FD352 | G1380 | DF501 | W | | |
| SP 400 MAGESTY | 400 | 05 | | FD169 | G1054 | 2 | DF500 | W | | | FD352 | G1380 | DF501 | W | | |
| SP 400 GRAND MAJESTY (JAP) | 400 | 05 | | FD169 | G1054 | 2 | DF500 | W | | | FD352 | G1380 | DF501 | W | | |
| SR 400 | 400 | 02 | 13 | FD169 | G1054 | 1 | | | | | MF | | - | | | |
| SR 400 | 400 | 14 | | FD142 | G1054 | 1 | DF474 | | CW | | MF | | - | | | |
| X - MAX 400 | 400 | 13 | | FD266 | G1054 | 2 | DF503 | FLW | | | FD474 | G1380 | DF501 | W | | KG503 |
| XJR 400 R | 400 | 93 | 96 | FD169 | G1054 | 2 | DF472 | CW | | | FD057 | G1054 | DF458 | W | | |
| XJR 400 R | 400 | 97 | 00 | FD176 | G1054 | 2 | DF472 | CW | | | FD057 | G1054 | DF458 | W | | |
| XJR 400 R | 400 | 01 | | FD178 | G1054 | 2 | DF472 | CW | | | FD218 | G1054 | DF458 | W | | |
| XP 500 T-MAX | 500 | 00 | 03 | FD142 | G1054 | 1 | DF493 | W | | | FD260 | G1380 | DF494 | W | | |
| XP 500 T-MAX | 500 | 04 | 07 | FD169 | G1054 | 2 | DF503 | FLW | CW | | FD352 | G1380 | DF494 | W | | KG503 |
| XP 500 T-MAX ABS | 500 | 04 | 07 | FD169 | G1054 | 2 | DF503 | FLW | CW | | FD352 | G1380 | DF494 | W | | KG503 |
| XP 500 T-MAX | 500 | 08 | | FD178 | G1380 | 2 | DF525 | FLW | | | FD352 | G1380 | DF494 | W | | |
| XP 500 T-MAX ABS | 500 | 08 | | FD178 | G1380 | 2 | DF525 | FLW | | | FD352 | G1380 | DF494 | W | | |
| XP 500 T-MAX BLACK MAX | 500 | 06 | 07 | FD169 | G1380 | 2 | DF503 | FLW | CW | | FD352 | G1380 | DF494 | W | | KG503 |
| XP 500 T-MAX CUP | 500 | 03 | | FD068 | G1054 | 1 | DF498 | CW | CRW | | FD260 | G1054 | DF494 | W | | |
| XP 530 T-MAX | 530 | 12 | | FD178 | G1380 | 2 | DF503 | FLW | CW | | FD260 | G1380 | DF528 | W | | KG503 |
| XP 530 T-MAX ABS | 530 | 12 | | FD178 | G1380 | 2 | DF503 | FLW | CW | | FD260 | G1380 | DF528 | W | | KG503 |
| XV 535 S VIRAGO | 535 | 95 | | FD142 | G1054 | 1 | DF488 | W | | | MF459 | G2165 | - | | | |
| FZS 600 FAZER | 600 | 98 | 99 | FD178 | G1054 | 2 | DF472 | CW | | | FD069 | G1054 | DF458 | W | | |
| FZS 600 S FAZER | 600 | 00 | 03 | FD178 | G1054 | 2 | DF472 | CW | | | FD069 | G1054 | DF458 | W | | |
| FZ 6 FAZER | 600 | 04 | 06 | FD169 | G1054 | 2 | DF495 | CW | CRW | | FD134 | G1054 | DF485 | W | | |
| FZ 6 S FAZER | 600 | 04 | 06 | FD169 | G1054 | 2 | DF495 | CW | CRW | | FD134 | G1054 | DF485 | W | | |
| FZ 6 /S FAZER ABS | 600 | 06 | 06 | FD169 | G1054 | 2 | DF495 | CW | CRW | | FD134 | G1054 | DF485 | W | | |
| FZ 6 S2 | 600 | 07 | | FD178 | G1054 | 2 | DF495 | CW | CRW | | FD134 | G1054 | DF485 | W | | |
| FZ 6 FAZER S2 | 600 | 07 | | FD178 | G1054 | 2 | DF495 | CW | CRW | | FD134 | G1054 | DF485 | W | | |
| FZ 6 S2 ABS | 600 | 07 | | FD178 | G1054 | 2 | DF495 | CW | CRW | | FD134 | G1054 | DF485 | W | | |
| FZ 6 FAZER S2 ABS | 600 | 07 | | FD178 | G1054 | 2 | DF495 | CW | CRW | | FD134 | G1054 | DF485 | W | | |
| FZR 600 | 600 | 90 | 95 | FD087 | G1054 | 2 | DF472 | CW | | | FD057 | G1054 | DF458 | W | | |
| FZR 600 GENESIS | 600 | 91 | 95 | FD121 | G1054 | 2 | DF472 | CW | | | FD057 | G1054 | DF458 | W | | |
| SRX Classic by BIRD | 600 | 90 | | FD069 | G1054 | 2 | DF471 | W | | | FD069 | G1054 | DF458 | W | | |
| TT 600 S | 600 | 94 | | FD079 | G1054 | 1 | DF452 | W | | | FD079 | G1054 | DF451 | W | | |
| XJ 6 S DIVERSION (FZ 6 R USA) | 600 | 09 | | FD169 | G1054 | 2 | DF495 | CW | CRW | | FD103 | G1054 | DF511 | W | | |
| XJ 6 S DIVERSION ABS | 600 | 09 | | FD169 | G1054 | 2 | DF495 | CW | CRW | | FD103 | G1054 | DF511 | W | | |
| XJ 6 S DIVERSION F | 600 | 10 | | FD169 | G1054 | 2 | DF495 | CW | CRW | | FD103 | G1054 | DF511 | W | | |
| XJ 6 S DIVERSION NAKED | 600 | 09 | | FD169 | G1054 | 2 | DF495 | CW | CRW | | FD103 | G1054 | DF511 | W | | |
| XJ 600 N / S | 600 | 95 | 97 | FD142 | G1054 | 1 | DF463 | W | | | FD069 | G1054 | DF458 | W | | |
| XJ 600 N / S | 600 | 96 | 03 | FD169 | G1054 | 2 | DF474 | CW | | | FD069 | G1054 | DF458 | W | | |
| XJ 600 S DIVERSION | 600 | 91 | 97 | FD142 | G1054 | 1 | DF463 | W | | | FD069 | G1054 | DF458 | W | | |
| XJ 600 S DIVERSION | 600 | 98 | 08 | FD169 | G1054 | 2 | DF488 | W | | | FD069 | G1054 | DF458 | W | | |
| XJ 600 SECA II | 600 | 92 | 93 | FD142 | G1054 | 1 | DF463 | W | | | FD069 | G1054 | DF458 | W | | |
| XT 600 E | 600 | 90 | 94 | FD129 | G1054 | 1 | DF453 | W | | | FD079 | G1054 | DF467 | W | | |
| XT 600 E | 600 | 95 | | FD129 | G1054 | 1 | DF470 | W | | | FD079 | G1054 | DF467 | W | | |
| YZF 600 THUNDER CAT | 600 | 96 | 00 | FD178 | G1054 | 2 | DF474 | CW | | | FD057 | G1054 | DF458 | W | | |
| YZF 600 R-6 | 600 | 99 | 02 | FD178 | G1054 | 2 | DF474 | CW | | | FD214 | G1054 | DF491 | W | | |
| YZF 600 R-6 | 600 | 03 | 04 | FD178 | G1375 | 2 | DF495 | CW | CRW | | FD134 | G1371 | DF496 | W | | |
| YZF 600 R-6 | 600 | 05 | 05 | FD178 | G1375 | 2 | DF482 | CW | CRW | | FD134 | G1371 | DF496 | W | | |
| YZF 600 R-6 | 600 | 06 | 07 | FD178 | G1375 | 2 | DF482 | CW | CRW | | FD134 | G1371 | DF496 | W | | |
| YZF 600 R-6 | 600 | 08 | | FD178 | G1375 | 2 | DF482 | CW | CRW | | FD134 | G1371 | DF496 | W | | |
| YZF 600 R-46 | 600 | 05 | | FD178 | G1375 | 2 | DF482 | CW | CRW | | FD134 | G1371 | DF496 | W | | |
| XVS 650 DRAG STAR | 650 | 97 | | FD142 | G1054 | 1 | DF488 | W | | | MF459 | G2165 | - | | | |
| XVS 650 STAR CLASSIC | 650 | 97 | | FD142 | G1054 | 1 | DF488 | W | | | MF459 | G2165 | - | | | |
| XVS 650 STAR SILVERADO | 650 | 97 | | FD142 | G1054 | 1 | DF488 | W | | | MF459 | G2165 | - | | | |
| MT-03 | 660 | 06 | | FD169 | G1054 | 2 | DF495 | CW | CRW | | FD165 | G1054 | DF485 | W | | |
| SZR 660 | 660 | 95 | | FD068 | G1054 | 1 | DF660 | CW | CRW | | FD165 | G1054 | DF468 | W | | |
| XT 660 R | 660 | 04 | | FD172 | G1054 | 1 | DF448 | CW | | | FD165 | G1054 | DF458 | W | | |
| XT 660 X | 660 | 04 | | FD176 | G1054 | 1 | | | | | FD165 | G1054 | DF458 | W | | |
| XTZ 660 TENERE | 660 | 93 | 98 | FD129 | G1054 | 1 | DF470 | W | | | FD079 | G1054 | DF467 | W | | |
| XT 660 Z TENERE | 660 | 08 | | FD138 | G1054 | 2 | DF448 | CW | | | FD165 | G1054 | DF458 | W | | |
| MT 07 | 700 | 14 | | FD178 | G1054 | 2 | | | | | FD134 | G1054 | DF469 | W | | |
| MT 07 ABS | 700 | 14 | | FD178 | G1054 | 2 | | | | | FD134 | G1054 | DF469 | W | | |
| MT 07 MOTOCAGE | 700 | 15 | | FD178 | G1054 | 2 | | | | | FD134 | G1054 | DF469 | W | | |
| MT 07 MOTOCAGE ABS | 700 | 15 | | FD178 | G1054 | 2 | | | | | FD134 | G1054 | DF469 | W | | |
| XV 750 | 750 | 94 | 94 | FD127 | G1054 | 2 | DF471 | W | | | MF477 | G2165 | - | | | |
| XV 750 | 750 | 95 | | FD142 | G1054 | 2 | DF471 | W | | | MF477 | G2165 | - | | | |
| XV 750 VIRAGO | 750 | 93 | | FD087 | G1054 | 2 | DF471 | W | | | MF477 | G2165 | - | | | |
| YZF 750 R, SP | 750 | 93 | 95 | FD157 | G1054 | 2 | DF660 | CW | CRW | | FD057 | G1054 | DF458 | W | | |

OE discs → W FLW CW Special discs → WLL WS RW RWS FLS FRS CRW

| BRAND & MODEL • MARCA Y MODELO<br>MARCA E MODELLO • MARQUE ET MODÉLE | C.C. | YEAR | | FRONT FD MF | FRONT COMPOUND RECOMMENDED | FRONT N° | FRONT DF | FRONT OE | FRONT UPGRADE 1 | FRONT UPGRADE 2 | REAR FD MF | REAR COMPOUND RECOMMENDED | REAR DF | REAR OE | REAR UPGRADE | KITS KG |
|---|---|---|---|---|---|---|---|---|---|---|---|---|---|---|---|---|
| YZF-R7/OW02 RACE | 750 | 99 | | FD193 | G1375 | 2 | DF498 | CW | CRW | | FD163 | G1054 | DF458 | W | | |
| YZF-R7/OW02 | 750 | 99 | | FD178 | G1375 | 2 | | | | | FD218 | G1054 | DF458 | W | | |
| FAZER 8 | 800 | 10 | | FD178 | G1370 | 2 | DF482 | CW | CRW | | FD134 | G1371 | DF500 | W | | |
| FZ 8 | 800 | 10 | | FD178 | G1370 | 2 | DF482 | CW | CRW | | FD134 | G1371 | DF500 | W | | |
| MT 09 | 850 | 13 | | FD178 | G1370 | 2 | DF495 | CW | CRW | | FD134 | G1371 | DF469 | W | | |
| MT 09 ABS | 850 | 13 | | FD178 | G1370 | 2 | DF495 | CW | CRW | | FD134 | G1371 | DF469 | W | | |
| MT 09 SPORTS TRACKER ABS | 850 | 14 | | FD178 | G1370 | 2 | DF495 | CW | CRW | | FD134 | G1371 | DF469 | W | | |
| MT 09 STREET RALLY | 850 | 14 | | FD178 | G1370 | 2 | DF495 | CW | CRW | | FD134 | G1371 | DF469 | W | | |
| MT 09 TRACER ABS | 850 | 15 | | FD178 | G1370 | 2 | DF495 | CW | CRW | | FD134 | G1371 | DF469 | W | | |
| TDM 850 | 850 | 90 | 01 | FD087 | G1054 | 2 | DF472 | CW | | | FD057 | G1054 | DF458 | W | | |
| TRX 850 | 850 | 95 | | FD176 | G1054 | 2 | DF472 | CW | | | FD057 | G1054 | DF458 | W | | |
| TDM 900 | 900 | 02 | 04 | FD178 | G1054 | 2 | DF474 | CW | | | FD295 | G1054 | DF458 | W | | |
| TDM 900 A | 900 | 05 | | FD178 | G1054 | 2 | DF474 | CW | | | FD295 | G1054 | DF458 | W | | |
| XJ 900 S DIVERSION | 900 | 95 | | FD142 | G1054 | 2 | | | | | FD057 | G1054 | DF471 | W | | |
| XVS 950 A MIDNIGHT STAR | 950 | 09 | | FD142 | G1370 | 1 | | | | | FD352 | G1054 | | | | |
| XVS 950 | 950 | 13 | | FD142 | G1370 | 1 | | | | | FD352 | G1054 | | | | |
| XVS 950 R | 950 | 13 | | FD142 | G1370 | 1 | | | | | FD352 | G1054 | | | | |
| XVS 950 BOLT (USA) | 950 | 13 | | FD142 | G1370 | 1 | | | | | FD352 | G1054 | | | | |
| FZ 1 (USA) | 1000 | 98 | 05 | FD178 | G1054 | 2 | DF474 | CW | | | FD329 | G1054 | DF471 | W | | |
| FZ 1 / FAZER | 1000 | 06 | | FD178 | G1375 | 2 | DF475 | CW | CRW | | FD134 | G1371 | DF485 | W | | |
| FZR 1000 EXUP | 1000 | 93 | 95 | FD143 | G1054 | 2 | DF660 | CW | CRW | | FD057 | G1054 | DF471 | W | | |
| FZS 1000 FAZER | 1000 | 98 | 05 | FD178 | G1054 | 2 | DF474 | CW | | | FD329 | G1054 | DF471 | W | | |
| GTS 1000 OMEGA | 1000 | 93 | | FD154 | G1054 | 2 | | | | | FD057 | G1054 | DF459 | W | | |
| XS-V1 SAKURA | 1000 | 09 | | FD169 | G1375 | 2 | | | | | FD057 | G1371 | | | | |
| YZF 1.000 THUNDER ACE | 1000 | 96 | 98 | FD178 | G1054 | 2 | DF474 | CW | | | FD057 | G1054 | DF458 | W | | |
| YZF 1.000 R-1 | 1000 | 98 | 01 | FD178 | G1054 | 2 | DF474 | CW | | | FD218 | G1054 | DF458 | W | | |
| YZF 1.000 R-1 | 1000 | 02 | 03 | FD178 | G1054 | 2 | DF474 | CW | | | FD214 | G1054 | DF491 | W | | KG474 |
| YZF 1.000 R-1 | 1000 | 04 | 05 | FD178 | G1054 | 2 | DF475 | CW | CRW | | FD134 | G1054 | DF496 | W | | |
| YZF 1.000 R-1 | 1000 | 06 | 06 | FD178 | G1054 | 2 | DF475 | CW | CRW | | FD134 | G1054 | DF496 | W | | |
| YZF 1.000 R-1 SP | 1000 | 06 | 06 | FD178 | G1054 | 2 | | | | | FD134 | G1054 | | | | |
| YZF 1.000 R-1 | 1000 | 07 | 08 | FD365 | G1375 | 2 | DF520 | CW | CRW | | FD134 | G1371 | DF496 | W | | |
| YZF 1.000 R-1 | 1000 | 09 | 11 | FD365 | G1375 | 2 | DF520 | CW | CRW | | FD134 | G1371 | DF496 | W | | |
| YZF 1.000 R-1 TCS | 1000 | 12 | 14 | FD365 | G1375 | 2 | DF520 | CW | CRW | | FD134 | G1371 | DF496 | W | | |
| YZF - R1 | 1000 | 15 | | FD178 | G1375 | 2 | DF475 | CW | CRW | | FD363 | G1371 | DF496 | W | | |
| YZF - R1M | 1000 | 15 | | FD178 | G1375 | 2 | DF475 | CW | CRW | | FD363 | G1371 | DF496 | W | | |
| BT 1100 BULL DOG | 1100 | 01 | | FD178 | G1054 | 2 | DF474 | CW | | | FD057 | G1054 | DF471 | W | | |
| XV 1100 VIRAGO | 1100 | 93 | 94 | FD087 | G1054 | 2 | DF471 | W | | | MF459 | G2165 | - | | | |
| XV 1100 VIRAGO | 1100 | 95 | 98 | FD142 | G1054 | 2 | DF471 | W | | | MF459 | G2165 | - | | | |
| XVS 1100 DRAG STAR | 1100 | 99 | | FD169 | G1054 | 2 | DF488 | W | | | FD057 | G1054 | DF459 | W | | |
| V MAX 1200 VMX | 1200 | 93 | 94 | FD121 | G1054 | 2 | DF459 | W | | | FD057 | G1054 | DF459 | W | | |
| V MAX 1200 VMX | 1200 | 95 | 02 | FD121 | G1054 | 2 | DF488 | W | | | FD057 | G1054 | DF459 | W | | |
| V MAX 1200 XMS | 1200 | 03 | | FD121 | G1054 | 2 | DF488 | W | | | FD057 | G1054 | DF459 | W | | |
| XJR 1200 | 1200 | 94 | 94 | FD121 | G1054 | 2 | DF660 | CW | CRW | | FD057 | G1054 | DF471 | W | | |
| XJR 1200 (EUROPA) | 1200 | 95 | | FD068 | G1054 | 2 | DF660 | CW | CRW | | FD057 | G1054 | DF471 | W | | |
| XTZ 1200 SUPER TENERE | 1200 | 10 | | FD178 | G1370 | 2 | DF520 | CW | CRW | | FD295 | G1054 | DF459 | W | | |
| XTZ 1200 SUPER TENERE ABS | 1200 | 10 | | FD178 | G1370 | 2 | DF520 | CW | CRW | | FD295 | G1054 | DF459 | W | | |
| XTZ 1200 ZE SUPER TENERE ABS | 1200 | 14 | | FD178 | G1370 | 2 | DF520 | CW | CRW | | FD295 | G1054 | DF459 | W | | |
| FJR 1300 | 1300 | 01 | 02 | FD178 | G1054 | 2 | DF474 | CW | | | FD295 | G1371 | DF459 | W | | |
| FJR 1300 | 1300 | 03 | 05 | FD178 | G1054 | 2 | DF498 | CW | CRW | | FD295 | G1371 | DF459 | W | | |
| FJR 1300 ABS | 1300 | 06 | 07 | FD372 | G1370 | 2 | | | | | FD295 | G1371 | | | | |
| FJR 1300 ABS | 1300 | 08 | | FD372 | G1370 | 2 | | | | | FD295 | G1371 | | | | |
| VENTURE ROYALE 1300 | 1300 | 90 | | FD087 | G1054 | 2 | DF459 | W | | | FD057 | G1371 | | | | |
| XJR 1300 | 1300 | 99 | 00 | FD178 | G1054 | 2 | DF474 | CW | | | FD057 | G1054 | DF471 | W | | |
| XJR 1300 | 1300 | 01 | | FD178 | G1054 | 2 | DF474 | CW | | | FD329 | G1054 | DF471 | W | | |
| XJR 1300 RACER | 1300 | 15 | | FD178 | G1054 | 2 | DF474 | CW | | | FD329 | G1054 | DF471 | W | | |
| XVS MIDNIGHT STAR 1300 | 1300 | 07 | | FD169 | G1054 | 2 | DF474 | CW | | | FD295 | G1054 | | | | |
| XZV 1.300 ROYAL STAR | 1300 | 96 | 98 | FD087 | G1054 | 2 | DF488 | W | | | FD087 | G1054 | DF463 | W | | |
| XZV 1.300 TF ROYAL STAR VENTURE | 1300 | 99 | | FD142 | G1054 | 2 | DF488 | W | | | FD087 | G1054 | DF463 | W | | |
| XV 1600 WILD STAR | 1600 | 99 | | FD142 | G1054 | 2 | DF488 | W | | | FD087 | G1054 | | | | |
| MT 01 | 1650 | 05 | 06 | FD178 | G1370 | 2 | DF498 | CW | CRW | | FD140 | G1054 | DF471 | W | | |
| MT 01 | 1650 | 07 | | FD365 | G1370 | 2 | DF519 | CW | | | FD140 | G1054 | DF471 | W | | |
| V MAX 1700 | 1700 | 09 | | FD365 | G1370 | 2 | | | | | FD295 | G1371 | | | | |
| XV 1700 ROAD STAR WARRIOR | 1700 | 02 | 07 | FD178 | G1054 | 2 | DF488 | W | | | FD295 | G1371 | | | | |
| XV 1700 ROAD STAR WARRIOR | 1700 | 08 | | FD178 | G1370 | 2 | DF488 | W | | | FD295 | G1371 | | | | |
| XV STAR RAIDER | 1900 | 08 | | FD178 | G1370 | 2 | DF495 | CW | CRW | | FD295 | G1371 | | | | |
| XV 1900 STRATOLINER | 1900 | 06 | | FD178 | G1370 | 2 | DF474 | CW | | | FD295 | G1371 | | | | |
| XVS 1900 MIDNIGHT STAR | 1900 | 06 | 12 | FD178 | G1370 | 2 | DF474 | CW | | | FD295 | G1371 | | | | |
| XVS 1900 MIDNIGHT STAR | 1900 | 13 | | FD372 | G1370 | 2 | | | | | FD295 | G1371 | | | | |
| **YAMAHA BRASIL** | | | | | | | | | | | | | | | | |
| TT R 230 | 230 | 08 | | FD086 | G1054 | 1 | DF467 | W | | | MF | | - | | | |
| XTZ 250 LANDER | 250 | 07 | | FD086 | G1054 | 1 | DF450 | W | | | FD114 | G1054 | | | | |
| XTZ 250 X | 250 | 07 | | FD086 | G1054 | 1 | DF450 | W | | | FD114 | G1054 | | | | |
| XTZ 250 Z TENERE | 250 | 11 | | FD086 | G1054 | 1 | DF450 | W | | | FD114 | G1054 | | | | |



**OE:** Original equipment (original replacement disc) • **OE:** Equipo original (disco de remplazo del original) For other models years previous to 1990 visit **www.galferonline.es** • Para otros modelos anteriores al año 1990 visitar **www.galferonline.es**
For consult TÜV (ABE) type approvals visit **www.galfermoto.com --> DOWNLOAD --> TÜV CERTIFICATIONS** • Para consultar las homologaciones TÜV (ABE) visitar **www.galfermoto.com --> DESCARGAS --> CERTIFICACIONES TÜV**

| BRAND & MODEL • MARCA Y MODELO<br>MARCA E MODELLO • MARQUE ET MODÉLE | C.C. | YEAR | | FRONT FD MF | FRONT COMPOUND RECOMMENDED | FRONT N° | FRONT DF | FRONT OE | FRONT UPGRADE 1 | FRONT UPGRADE 2 | REAR FD MF | REAR COMPOUND RECOMMENDED | REAR DF | REAR OE | REAR UPGRADE | KITS KG |
|---|---|---|---|---|---|---|---|---|---|---|---|---|---|---|---|---|
| YS 250 FAZER | 250 | 06 | 09 | FD086 | G1054 | 1 | DF470 | W | | | MF | | - | | | |
| YS 250 FAZER | 250 | 10 | 10 | FD117 | G1054 | 1 | DF470 | W | | | MF | | - | | | |
| YS 250 FAZER | 250 | 11 | | FD117 | G1054 | 1 | DF470 | W | | | FD114 | G1054 | | | | |
| **YAMAHA INDONESIA** | | | | | | | | | | | | | | | | |
| JUPITER MX T 135 | 135 | 06 | | FD393 | G1054 | 1 | | | | | FD259 | G1054 | | | | |
| JUPITER MX T 135 HC | 135 | 06 | 10 | FD393 | G1054 | 1 | | | | | MF | | - | | | |
| JUPITER MX T 135 SE | 135 | 06 | | FD393 | G1054 | 1 | | | | | MF | | - | | | |
| JUPITER MX T 135 SEC | 135 | 08 | | FD393 | G1054 | 1 | | | | | MF | | - | | | |
| RX - KING RXK 135 | 135 | 02 | | FD214 | G1054 | 1 | | | | | MF | | - | | | |
| V - IXION FZ 150 | 150 | 07 | | FD393 | G1054 | 1 | | | | | MF | | - | | | |
| SCORPIO SX 4 | 223 | 01 | | FD214 | G1054 | 1 | | | | | MF | | - | | | |
| SCORPIO Z SX | 223 | 12 | | FD214 | G1054 | 1 | | | | | MF | | - | | | |
| SCORPIO Z SX 4 | 223 | 05 | | FD214 | G1054 | 1 | | | | | MF | | - | | | |
| **YAMAHA MALASIA** | | | | | | | | | | | | | | | | |
| 135 LC | 135 | 11 | | FD393 | G1054 | 1 | | | | | MF | | - | | | |
| 135 LC ES | 135 | 11 | | FD214 | G1054 | 1 | | | | | MF | | - | | | |
| NUOVO LC | 135 | 12 | | FD393 | G1054 | 1 | | | | | MF | | - | | | |
| FZ 150i | 150 | 11 | | FD393 | G1054 | 1 | | | | | MF | | - | | | |

## FD 012

mm 39,8 x 56,3 | 7,0 | A | A

G1054 | G1805 | G1371 |

| BRAND MARCA | MODEL MODELO | C.C. | YEAR | FRONT | REAR |
|---|---|---|---|---|---|
| **BENELLI** | | | | | |
| UNO C 150 | | 150 | 13- | FD176 | FD012 |
| UNO C 250 | | 250 | 13- | FD176 | FD012 |
| **BIMOTA** | | | | | |
| V-DUE 500 | | 500 | 98- | FD068 | FD012 |
| V-DUE 500 EVOLUZIONE | | 500 | 00- | FD176 | FD012 |
| BELLARIA | | 600 | 90- | FD068 | FD012 |
| YB9 SUPERSPORT 600 | | 600 | 93- | FD068 | FD012 |
| BB1 SUPERMONO | | 650 | 95- | FD068 | FD012 |
| SB 6 750 | | 750 | 94- | FD068 | FD012 |
| TESI 1D 851 | | 851 | 90-91 | FD068 | FD012 |
| MANTRA 900 | | 900 | 95- | FD068 | FD012 |
| DB4 | | 900 | 98-99 | FD176 | FD012 |
| DB2 H.F, SR, INJECTION | | 904 | 93- | FD068 | FD012 |
| TESI 1D 906 SR, ES, EF | | 904 | 93- | FD068 | FD012 |
| TESI 2D | | 992 | 06- | FD068 | FD012 |
| SB8 K SANTAMONICA | | 996 | 06- | FD262 | FD012 |
| SB8 R SPECIAL | | 996 | 97- | FD068 | FD012 |
| DIECI | | 1000 | 91- | FD068 | FD012 |
| DIECI BIPOSTO | | 1000 | 92-95 | FD068 | FD012 |
| TESI 2D | | 1000 | 05- | FD068 | FD012 |
| YB10 BIPOSTO | | 1000 | 93- | FD068 | FD012 |
| YB8 | | 1000 | 90- | FD068 | FD012 |
| YB8 EVOLUTION | | 1000 | 93- | FD068 | FD012 |
| YB8 EXUP | | 1000 | 91- | FD068 | FD012 |
| YB8 FURANO 1000 | | 1000 | 92- | FD068 | FD012 |
| SB6 | | 1100 | 98- | FD068 | FD012 |
| SB7 1100 | | 1100 | 94- | FD068 | FD012 |
| TUATARA 1100 | | 1100 | 90- | FD068 | FD012 |
| **CAGIVA** | | | | | |
| MITO 500 | | 500 | 07-07 | FD068 | FD012 |
| MITO 500 | | 500 | 08- | FD262 | FD012 |
| RIVER 600 | | 600 | 95- | FD068 | FD012 |
| **DUCATI** | | | | | |
| 350 SPORT | | 350 | 91- | FD068 | FD012 |
| 400 SS | | 400 | 93- | FD068 | FD012 |
| 400 SS JUNIOR | | 400 | 91-92 | FD044 | FD012 |
| 502 | | 502 | 92- | FD068 | FD012 |
| 600 M MONSTER | | 600 | 94-00 | FD068 | FD012 |
| 600 SS | | 600 | 93- | FD068 | FD012 |
| 600 SUPERMONO DESMO QUATTRO | | 600 | 93- | FD068 | FD012 |
| MONSTER 620 S i.e | | 620 | 01-04 | FD176 | FD012 |
| MULTISTRADA MTS 620 | | 620 | 05- | FD138 | FD012 |
| MULTISTRADA MTS 620 DARK | | 620 | 05- | FD176 | FD012 |
| MONSTER 695 | | 695 | 06- | FD138 | FD012 |
| MONSTER 696 | | 695 | 08- | FD176 | FD012 |
| 748 DESMO QUATTRO | | 748 | 94-97 | FD068 | FD012 |
| 748 | | 748 | 98-99 | FD176 | FD012 |
| 748 E/S | | 748 | 00-02 | FD176 | FD012 |
| 750 M MONSTER | | 750 | 96- | FD068 | FD012 |
| 750 SS | | 750 | 91-97 | FD068 | FD012 |
| 851 SPORT PRODUCTION | | 851 | 90-91 | FD068 | FD012 |
| 888 CORSA | | 888 | 91-91 | FD068 | FD012 |
| 888 DESMO QUATTRO | | 888 | 93-93 | FD068 | FD012 |
| 888 SPS | | 888 | 92-92 | FD068 | FD012 |
| 888 STRADA | | 888 | 94-95 | FD068 | FD012 |
| MH 900 E | | 900 | 00- | FD176 | FD012 |
| 900 M MONSTER | | 900 | 93-00 | FD068 | FD012 |
| 900 SS | | 900 | 91-97 | FD068 | FD012 |
| 900 SUPERLIGHT | | 900 | 93- | FD068 | FD012 |
| 907 i.e. | | 907 | 91- | FD068 | FD012 |
| MONSTER S4 | | 916 | 01-02 | FD176 | FD012 |
| 916 STRADA | | 916 | 94-98 | FD068 | FD012 |
| 916 SENNA | | 916 | 94-97 | FD068 | FD012 |
| 916 SPS | | 916 | 98-98 | FD068 | FD012 |
| 996 S | | 996 | 99-01 | FD176 | FD012 |
| 998 | | 998 | 02- | FD176 | FD012 |
| 998 R | | 998 | 02- | FD262 | FD012 |
| 998 S | | 998 | 02- | FD262 | FD012 |
| **GILERA-PIAGGIO** | | | | | |
| 350 NORDWEST | | 491 | 94- | FD119 | FD012 |
| 600 NORDWEST | | 600 | 91- | FD118 | FD012 |
| 600 XRT | | 600 | 90- | FD089 | FD012 |
| **ITALJET** | | | | | |
| GRIFON | | 900 | 00- | FD068 | FD012 |
| **LAVERDA** | | | | | |
| 650 | | 650 | 92- | FD068 | FD012 |
| GHOST | | 650 | 96-97 | FD068 | FD012 |
| SPORT | | 650 | 95- | FD068 | FD012 |
| 750 BLACK STRIKE | | 750 | 98- | FD068 | FD012 |
| 750 FORMULA | | 750 | 98- | FD068 | FD012 |
| 750 SUPER SPORT | | 750 | 00- | FD068 | FD012 |
| **MOTO GUZZI** | | | | | |
| 350 NEVADA | | 350 | 92- | FD012 | FD012 |
| 350 TRENTACINQUE GT | | 350 | 92- | FD012 | FD012 |
| V 35 FLORIDA III | | 350 | 92- | FD012 | FD012 |
| 750 BREVA i.e. | | 750 | 03- | FD176 | FD012 |
| 750 NEVADA | | 750 | 92- | FD012 | FD012 |
| 750 NEVADA CLUB | | 750 | 98- | FD012 | FD012 |
| 750 SP | | 750 | 92- | FD012 | FD012 |
| V 7 CLASSIC | | 750 | 08- | FD176 | FD012 |
| CENTAURO | | 1000 | 96- | FD068 | FD012 |
| DAYTONA i.e | | 1000 | 91-94 | FD068 | FD012 |
| DAYTONA i.e | | 1000 | 95- | FD068 | FD012 |
| MILLE GT | | 1000 | 92- | FD013 | FD012 |
| 1100 SPORT | | 1100 | 95-97 | FD068 | FD012 |
| V-10 CENTAURO SPORT | | 1100 | 99- | FD068 | FD012 |
| V-11 LE MANS ROSSO CORSA | | 1100 | 03- | FD176 | FD012 |
| V-11 SCURA | | 1100 | 03- | FD176 | FD012 |
| V-11 SPORT / LE MANS | | 1100 | 99- | FD176 | FD012 |
| **MOTO MORINI** | | | | | |
| 400 S | | 400 | 95- | FD012 | FD012 |
| **SACHS** | | | | | |
| TITAN 650 | | 650 | 03- | FD068 | FD012 |
| b-805 | | 800 | 03- | FD068 | FD012 |
| ROADSTER s-805 | | 800 | 03- | FD068 | FD012 |

## FD 013

mm 55,8 x 54,0 | 9,0 | A | A

G1054 | G1805 | G1370 |

| BRAND MARCA | MODEL MODELO | C.C. | YEAR | FRONT | REAR |
|---|---|---|---|---|---|
| **BMW** | | | | | |
| K 75 | | 750 | 93- | FD013 | FD013 |
| K 75 RT, S | | 750 | 93- | FD013 | FD044 |
| R 100 GS, R | | 1000 | 93-94 | FD198 | FD013 |
| K 1100 RS ABS | | 1100 | 93- | FD198 | FD013 |
| K 1100 LT (ABS) | | 1100 | 93-94 | FD198 | FD013 |
| R 1100 LT | | 1100 | 95- | FD198 | FD013 |
| R 1100 RS | | 1100 | 93-94 | FD198 | FD013 |
| **INDIAN MOTORCYCLE** | | | | | |
| CHIEF BLACKHAWK | | 1720 | 11- | FD068 | FD013 |
| CHIEF BLACKHAWK DARK | | 1720 | 11- | FD068 | FD013 |
| CHIEF BOMBER | | 1720 | 09- | FD068 | FD013 |
| CHIEF CLASSIC | | 1720 | 09- | FD068 | FD013 |
| CHIEF DARK HORSE | | 1720 | 09- | FD068 | FD013 |
| CHIEF DELUXE | | 1720 | 09- | FD068 | FD013 |
| CHIEF ROADMASTER | | 1720 | 09- | FD068 | FD013 |
| CHIEF STANDARD | | 1720 | 09- | FD068 | FD013 |
| CHIEF VINTAGE | | 1720 | 09- | FD068 | FD013 |
| ROAD MASTER | | 1811 | 15- | FD068 | FD013 |
| **MOTO GUZZI** | | | | | |
| 1000 CALIFORNIA III C.I./I.E | | 1000 | 92- | FD013 | FD013 |
| 1000 SP III i.e. | | 1000 | 92- | FD013 | FD013 |
| MILLE GT | | 1000 | 92- | FD013 | FD012 |
| 1100 I CALIFORNIA | | 1100 | 94- | FD013 | FD013 |
| 1100 I CALIFORNIA | | 1100 | 95- | FD068 | FD013 |

## FD 022

mm 58,5 x 53,9 | 9,0 | A | A

G1054 |

| BRAND MARCA | MODEL MODELO | C.C. | YEAR | FRONT | REAR |
|---|---|---|---|---|---|
| **SUZUKI** | | | | | |
| VX 800 | | 800 | 90- | FD090 | FD022 |
| ZX 800 | | 800 | 92- | FD090 | FD022 |
| GSX 1100 G | | 1100 | 90-92 | FD090 | FD022 |

## FD 044

mm 60,15 x 58,6 | 9,0 | A | A

G1054 |

| BRAND MARCA | MODEL MODELO | C.C. | YEAR | FRONT | REAR |
|---|---|---|---|---|---|
| **BMW** | | | | | |
| R 65 R | | 650 | 93- | FD044 | MF610 |
| K 75 RT, S | | 750 | 93- | FD013 | FD044 |
| R 80 GS | | 800 | 93- | FD044 | MF610 |
| R 80 RT | | 800 | 93- | FD044 | MF |
| RT 80 RT | | 800 | 91- | FD044 | MF |
| R 100 GS, PD, RT | | 1000 | 93-94 | FD044 | MF610 |
| K 1100 LT SPECIAL EDITION | | 1100 | 95- | FD198 | FD044 |
| K 1200 RS | | 1200 | 01- | FD272 | FD044 |
| **DUCATI** | | | | | |
| 400 SS JUNIOR | | 400 | 91-92 | FD044 | FD012 |
| **MZ/MuZ** | | | | | |
| SAXON | | 500 | 93- | FD044 | MF |
| SILVER STAR | | 500 | 93- | FD044 | MF |

## FD 045

mm 53,0 x 53,0 | 9,0 | A | A

G1054 |

| BRAND MARCA | MODEL MODELO | C.C. | YEAR | FRONT | REAR |
|---|---|---|---|---|---|
| **SUZUKI** | | | | | |
| BANDIT 250 | | 250 | 90- | FD090 | FD045 |
| GS 400 E | | 400 | 91- | FD090 | FD045 |
| GSX 400 IMPULSE (Japan) | | 400 | 94-98 | FD266 | FD045 |
| GSX 400 IMPULSE (Japan) | | 400 | 99- | FD176 | FD045 |
| GSX R 400 | | 400 | 90- | FD090 | FD045 |
| GSX R 400 R | | 400 | 90- | FD099 | FD045 |
| RF 400 R | | 400 | 93- | FD266 | FD045 |
| GSX 600 R | | 600 | 92-96 | FD099 | FD045 |

## FD 046

mm 75,8 x 5,0 | 10,8 | A | A

G1054 |

| BRAND MARCA | MODEL MODELO | C.C. | YEAR | FRONT | REAR |
|---|---|---|---|---|---|
| **SUZUKI** | | | | | |
| GN 250 | | 250 | 93- | FD046 | MF151 |



For other models years previous to 1990 visit **www.galferonline.es** - Para otros modelos anteriores al año 1990 visitar **www.galferonline.es**
For consult TÜV (ABE) type approvals visit **www.galfermoto.com --> DOWNLOAD --> TÜV CERTIFICATIONS** - Para consultar las homologaciones TÜV (ABE) visitar **www.galfermoto.com --> DESCARGAS --> CERTIFICACIONES TÜV**

## FD 047

mm: 72,1 x 45,5 | 11,4 | A | A

G1054

| BRAND MARCA | MODEL MODELO | C.C. | YEAR | FRONT | REAR |
|---|---|---|---|---|---|
| **SUZUKI** | | | | | |
| | VN 800 VULCAN | 800 | 95- | FD047 | MF |

## FD 054

mm: 90,1 x 50,0 | 10,0 | A | A

G1054 | G1370

| BRAND MARCA | MODEL MODELO | C.C. | YEAR | FRONT | REAR |
|---|---|---|---|---|---|
| **HONDA** | | | | | |
| | CN 250 | 250 | 93- | FD054 | MF037 |
| | CN 250 HELIX | 250 | 90- | FD054 | MF009 |
| | CN 250 SPAZIO | 250 | 91- | FD054 | MF009 |
| | GL 1500 SE GOLD WING | 1500 | 91- | FD082 | FD054 |

## FD 056

mm: 68,2 x 58,8 | 9,5 | A | A

G1054

| BRAND MARCA | MODEL MODELO | C.C. | YEAR | FRONT | REAR |
|---|---|---|---|---|---|
| **YAMAHA** | | | | | |
| | SR 250, SP | 250 | 91- | FD056 | MF451 |
| | XV 250 VIRAGO | 250 | 93-95 | FD056 | MF451 |

## FD 057

mm: 63,9 x 55,2 | 9,0 | A | A

G1054 | G1371

| BRAND MARCA | MODEL MODELO | C.C. | YEAR | FRONT | REAR |
|---|---|---|---|---|---|
| **YAMAHA** | | | | | |
| | FZ 400 FAZER | 400 | 01- | FD176 | FD057 |
| | XJR 400 R | 400 | 93-96 | FD169 | FD057 |
| | XJR 400 R | 400 | 97-00 | FD176 | FD057 |
| | FZR 600 | 600 | 90-95 | FD087 | FD057 |
| | FZR 600 GENESIS | 600 | 91-95 | FD121 | FD057 |
| | YZF 600 THUNDER CAT | 600 | 96-00 | FD178 | FD057 |
| | YZF 750 R, SP | 750 | 93-95 | FD157 | FD057 |
| | TDM 850 | 850 | 90-01 | FD087 | FD057 |
| | TRX 850 | 850 | 95- | FD176 | FD057 |
| | XJ 900 S DIVERSION | 900 | 95- | FD142 | FD057 |
| | FZR 1000 EXUP | 1000 | 93-95 | FD143 | FD057 |
| | GTS 1000 OMEGA | 1000 | 93- | FD154 | FD057 |
| | XS-V1 SAKURA | 1000 | 09- | FD169 | FD057 |
| | YZF 1.000 THUNDER ACE | 1000 | 96-98 | FD178 | FD057 |
| | BT 1100 BULL DOG | 1100 | 01- | FD178 | FD057 |
| | XVS 1100 DRAG STAR | 1100 | 99- | FD169 | FD057 |
| | V MAX 1200 VMX | 1200 | 93-94 | FD121 | FD057 |
| | V MAX 1200 VMX | 1200 | 95-02 | FD121 | FD057 |
| | V MAX 1200 XMS | 1200 | 03- | FD121 | FD057 |
| | XJR 1200 | 1200 | 94-94 | FD121 | FD057 |
| | XJR 1200 (EUROPA) | 1200 | 95- | FD068 | FD057 |
| | VENTURE ROYALE 1300 | 1300 | 90- | FD087 | FD057 |
| | XJR 1300 | 1300 | 99-00 | FD178 | FD057 |

## FD 062

mm: 70,0 x 43,5 | 10,0 | A | B

mm: 110,7 x 51,0 | 10,0 | A | B

G1054 | G1370

| BRAND MARCA | MODEL MODELO | C.C. | YEAR | FRONT | REAR |
|---|---|---|---|---|---|
| **KAWASAKI** | | | | | |
| | EL 250, E | 250 | 91- | FD062 | MF152 |
| | EN 500 | 500 | 90-93 | FD062 | MF153 |
| | EN 500 VULCAN | 500 | 94- | FD062 | MF153 |
| | VN 750 VULCAN | 750 | 93- | FD062 | MF153 |
| | VN 800 | 800 | 94-97 | FD062 | FD062 |
| | GTR 1000 | 1000 | 94- | FD090 | FD062 |
| | VN 1500 SUMO | 1500 | 94-96 | FD062 | FD062 |
| | VN-15 SE | 1500 | 93- | FD062 | FD062 |
| | VN-CLASSIC | 1500 | 96-97 | FD174 | FD062 |
| | VN-EASSIC TOURER RIGHT/DER | 1500 | 98-99 | FD179 | FD062 |
| | VN 1600 SUMO/EASSIC RIGHT/DER | 1600 | 03- | FD179 | FD062 |

## FD 063

mm: 81,8 x 42,3 | 7,2 | A | A

G1054 | G1805 | G1397

| BRAND MARCA | MODEL MODELO | C.C. | YEAR | FRONT | REAR |
|---|---|---|---|---|---|
| **HYOSUNG** | | | | | |
| | AQUILA 700 GV i | 700 | 10- | FD176 | FD063 |
| | ST 7 | 700 | 10- | FD176 | FD063 |

## FD 065

mm: 36,0 x 45,0 | 6,0 | A | A

G1054 | G1805 | G1380

| BRAND MARCA | MODEL MODELO | C.C. | YEAR | FRONT | REAR |
|---|---|---|---|---|---|
| **APRILIA** | | | | | |
| | REPLICA 250 | 250 | 92- | FD068 | FD065 |
| **GAS GAS** | | | | | |
| | 250 PAMPERA | 250 | 96-02 | FD065 | FD065 |
| | 320 PAMPERA | 320 | 99- | FD065 | FD065 |
| **GILERA-PIAGGIO** | | | | | |
| | 500 SATURNO PIUMA | 500 | 90- | FD068 | FD065 |
| **ITALJET** | | | | | |
| | TORPEDO 150 | 150 | 00- | FD065 | MF |
| | DRAGSTER | 180 | 00- | FD065 | FD065 |
| **PEUGEOT** | | | | | |
| | LOOXOR | 150 | 02- | FD065 | FD065 |
| **RIEJU** | | | | | |
| | TANGO TRAIL 250 | 250 | 09- | FD220 | FD065 |
| **SIAMOTO** | | | | | |
| | CAPRI | 180 | 99- | FD065 | FD065 |
| **SUMCO** | | | | | |
| | KIRA KR 200 TR | 200 | 06- | FD162 | FD065 |
| | 200 KR | 200 | 05- | FD162 | FD065 |
| **YAMAHA** | | | | | |
| | TY 250 , Z, M | 250 | 93- | FD065 | FD065 |

## FD 066

mm: 58,6 x 53,9 | 8,6 | A | A

G1054 | G1370

| BRAND MARCA | MODEL MODELO | C.C. | YEAR | FRONT | REAR |
|---|---|---|---|---|---|
| **SUZUKI** | | | | | |
| | VS 400 INTRUDER | 400 | 94- | FD066 | MF |
| | VS 600 GL INTRUDER | 600 | 95- | FD066 | MF304 |
| | VS 800 GL | 800 | 93- | FD066 | MF304 |
| | VS 800 GL, N, INTRUDER | 800 | 93-99 | FD066 | MF304 |
| | VL 1500 INTRUDER LEGENDARY EASSIC | 1500 | 98-99 | FD066 | FD083 |
| | VL 1500 INTRUDER LEGENDARY CLASSIC | 1500 | 00-01 | FD066 | FD083 |

## FD 068

mm: 69,6 x 51,0 | 8,2 | A | A

G1054 | G1370 | G1375 | G1003 | G1300

| BRAND MARCA | MODEL MODELO | C.C. | YEAR | FRONT | REAR |
|---|---|---|---|---|---|
| **APRILIA** | | | | | |
| | REPLICA 250 | 250 | 92- | FD068 | FD065 |
| | RS 250 | 250 | 95-97 | FD068 | FD153 |
| **BETA** | | | | | |
| | EURO | 350 | 00- | FD068 | FD165 |
| | JONATHAN | 350 | 03- | FD068 | FD165 |
| **BIMOTA** | | | | | |
| | V-DUE 500 | 500 | 98- | FD068 | FD012 |
| | BELLARIA | 600 | 90- | FD068 | FD012 |
| | YB9 SUPERSPORT 600 | 600 | 93- | FD068 | FD012 |
| | BB1 SUPERMONO | 650 | 95- | FD068 | FD012 |
| | SB 6 750 | 750 | 94- | FD068 | FD012 |
| | TESI 1D 851 | 851 | 90-91 | FD068 | FD012 |
| | MANTRA 900 | 900 | 95- | FD068 | FD012 |
| | DB2 H.F, SR, INJECTION | 904 | 93- | FD068 | FD012 |
| | TESI 1D 906 SR, ES, EF | 904 | 93- | FD068 | FD012 |
| | TESI 2D | 992 | 06- | FD068 | FD012 |
| | SB8 R SPECIAL | 996 | 97- | FD068 | FD012 |
| | DIECI | 1000 | 91- | FD068 | FD012 |
| | DIECI BIPOSTO | 1000 | 92-95 | FD068 | FD012 |
| | TESI 2D | 1000 | 05- | FD068 | FD012 |
| | YB10 BIPOSTO | 1000 | 93- | FD068 | FD012 |
| | YB8 | 1000 | 90- | FD068 | FD012 |
| | YB8 EVOLUTION | 1000 | 93- | FD068 | FD012 |
| | YB8 EXUP | 1000 | 91- | FD068 | FD012 |
| | YB8 FURANO 1000 | 1000 | 92- | FD068 | FD012 |
| | SB6 | 1100 | 98- | FD068 | FD012 |
| | SB7 1100 | 1100 | 94- | FD068 | FD012 |
| | TUATARA 1100 | 1100 | 90- | FD068 | FD012 |
| **BORILE** | | | | | |
| | B 500 CR | 500 | 02- | FD068 | FD165 |
| | B 500 MT | 500 | 02- | FD068 | FD165 |
| **BREMBO RACING** | | | | | |
| | 120B765** | | - | FD068 | |
| | 129B766** | | - | FD068 | |
| **CAGIVA** | | | | | |
| | MITO 500 | 500 | 07-07 | FD068 | FD012 |
| | RIVER 500 | 500 | 00- | FD068 | FD171 |
| | RIVER 600 | 600 | 95- | FD068 | FD012 |
| **DUCATI** | | | | | |
| | 350 SPORT | 350 | 91- | FD068 | FD012 |
| | 400 SS | 400 | 93- | FD068 | FD012 |
| | 502 | 502 | 92- | FD068 | FD012 |
| | 600 M MONSTER | 600 | 94-00 | FD068 | FD012 |
| | 600 SS | 600 | 93- | FD068 | FD012 |
| | 600 SUPERMONO DESMO QUATTRO | 600 | 93- | FD068 | FD012 |
| | 748 DESMO QUATTRO | 748 | 94-97 | FD068 | FD012 |
| | 750 M MONSTER | 750 | 96- | FD068 | FD012 |
| | 750 SS | 750 | 91-97 | FD068 | FD012 |
| | 851 SPORT PRODUCTION | 851 | 90-91 | FD068 | FD012 |
| | 888 CORSA | 888 | 91-91 | FD068 | FD012 |
| | 888 DESMO QUATTRO | 888 | 93-93 | FD068 | FD012 |

| | | | | |
|---|---|---|---|---|
| 888 SPS | 888 | 92-92 | FD068 | FD012 |
| 888 STRADA | 888 | 94-95 | FD068 | FD012 |
| 900 M MONSTER | 900 | 93-00 | FD068 | FD012 |
| 900 SS | 900 | 91-97 | FD068 | FD012 |
| 900 SUPERLIGHT | 900 | 93- | FD068 | FD012 |
| 907 i.e. | 907 | 91- | FD068 | FD012 |
| 916 STRADA | 916 | 94-98 | FD068 | FD012 |
| 916 SENNA | 916 | 94-97 | FD068 | FD012 |
| 916 SPS | 916 | 98-98 | FD068 | FD012 |
| ST 2 944 | 944 | 97-98 | FD068 | FD220 |
| **GILERA-PIAGGIO** | | | | |
| 500 SATURNO PIUMA | 500 | 90- | FD068 | FD065 |
| **HONDA** | | | | |
| NSR 250 R | 250 | 93- | FD068 | FD163 |
| RS 250 R | 250 | 93-96 | FD068 | FD113 |
| **HUSABERG** | | | | |
| 650 FS | 650 | 03-03 | FD068 | FD165 |
| **HUSQVARNA** | | | | |
| 570 SM R | 570 | 01- | FD068 | FD165 |
| NOX | 600 | 01- | FD068 | FD165 |
| 610 SM R | 610 | 00-04 | FD068 | FD165 |
| 630 SMR | 630 | 06- | FD068 | FD291 |
| **INDIAN MOTORCYCLE** | | | | |
| CHIEF BLACKHAWK | 1720 | 11- | FD068 | FD013 |
| CHIEF BLACKHAWK DARK | 1720 | 11- | FD068 | FD013 |
| CHIEF BOMBER | 1720 | 09- | FD068 | FD013 |
| CHIEF CLASSIC | 1720 | 09- | FD068 | FD013 |
| CHIEF DARK HORSE | 1720 | 09- | FD068 | FD013 |
| CHIEF DELUXE | 1720 | 09- | FD068 | FD013 |
| CHIEF ROADMASTER | 1720 | 09- | FD068 | FD013 |
| CHIEF STANDARD | 1720 | 09- | FD068 | FD013 |
| CHIEF VINTAGE | 1720 | 09- | FD068 | FD013 |
| ROAD MASTER | 1811 | 15- | FD068 | FD013 |
| **ITALJET** | | | | |
| GRIFON | 900 | 00- | FD068 | FD012 |
| **KTM** | | | | |
| 620 DUKE | 620 | 95-02 | FD068 | FD165 |
| 640 LC4 SUPERMOTARD | 640 | 02-04 | FD068 | FD165 |
| 660 SMC SUPERMOTARD | 660 | 99- | FD068 | FD165 |
| **LAVERDA** | | | | |
| 650 | 650 | 92- | FD068 | FD012 |
| GHOST | 650 | 96-97 | FD068 | FD012 |
| SPORT | 650 | 95- | FD068 | FD012 |
| 750 BLACK STRIKE | 750 | 98- | FD068 | FD012 |
| 750 FORMULA | 750 | 98- | FD068 | FD012 |
| 750 SUPER SPORT | 750 | 00- | FD068 | FD012 |
| **MOTO GUZZI** | | | | |
| CENTAURO | 1000 | 96- | FD068 | FD012 |
| DAYTONA i.e | 1000 | 91-94 | FD068 | FD012 |
| DAYTONA i.e | 1000 | 95- | FD068 | FD012 |
| 1100 I CALIFORNIA | 1100 | 95- | FD068 | FD013 |
| 1100 SPORT | 1100 | 95-97 | FD068 | FD012 |
| CALIFORNIA ESPECIAL | 1100 | 99- | FD068 | FD138 |
| CALIFORNIA EV | 1100 | 97- | FD068 | FD138 |
| CALIFORNIA JACKAL | 1100 | 99- | FD068 | FD138 |
| V-10 CENTAURO SPORT | 1100 | 99- | FD068 | FD012 |
| **NORTON** | | | | |
| 952 COMANDO | 952 | 04- | FD068 | FD220 |
| COMMANDO 961 SE | 961 | 10- | FD068 | FD220 |
| **P.G.O.** | | | | |
| G-MAX | 150 | 05- | FD068 | FD145 |
| G-MAX | 250 | 06- | FD068 | FD145 |
| **SACHS** | | | | |
| TITAN 650 | 650 | 03- | FD068 | FD012 |
| b-805 | 800 | 03- | FD068 | FD012 |
| ROADSTER s-805 | 800 | 03- | FD068 | FD012 |
| **VERTEMATI** | | | | |
| 492 SUPERMOTARD | 500 | 99-00 | FD068 | FD165 |
| **VOR** | | | | |
| SM 503 | 503 | 00- | FD068 | FD165 |
| **YAMAHA** | | | | |
| R1-Z | 250 | 90- | FD068 | FD069 |
| XP 500 T-MAX CUP | 500 | 03- | FD068 | FD260 |
| SZR 660 | 660 | 95- | FD068 | FD165 |
| XJR 1200 (EUROPA) | 1200 | 95- | FD068 | FD057 |

## FD 069

mm: 68,1 x 56,0 | 9,0 | A | A

G1054 | G1370

| BRAND MARCA | MODEL MODELO | C.C. | YEAR | FRONT | REAR |
|---|---|---|---|---|---|
| **YAMAHA** | | | | | |
| R1-Z | | 250 | 90- | FD068 | FD069 |
| RD 350 R | | 350 | 91- | FD069 | FD069 |
| FZR 400 RR | | 400 | 90- | FD178 | FD069 |
| FZS 600 FAZER | | 600 | 98-99 | FD178 | FD069 |
| FZS 600 S FAZER | | 600 | 00-03 | FD178 | FD069 |
| SRX Classic by BIRD | | 600 | 90- | FD069 | FD069 |
| XJ 600 N / S | | 600 | 95-97 | FD142 | FD069 |
| XJ 600 N / S | | 600 | 96-03 | FD169 | FD069 |
| XJ 600 S DIVERSION | | 600 | 91-97 | FD142 | FD069 |
| XJ 600 S DIVERSION | | 600 | 98-08 | FD169 | FD069 |
| XJ 600 SECA II | | 600 | 92-93 | FD142 | FD069 |

## FD 073

mm: 77,4 x 42,3 | 7,0 | A | A

G1054 | G1805

| BRAND MARCA | MODEL MODELO | C.C. | YEAR | FRONT | REAR |
|---|---|---|---|---|---|
| **CCM** | | | | | |
| XTR 250 | | 250 | 09- | FD073 | FD079 |
| **HYOSUNG** | | | | | |
| AQUILA 250 V-TWIN | | 250 | 02- | FD073 | MF |
| COMET GT 250 | | 250 | 02- | FD073 | FD073 |
| COMET GT 250 R | | 250 | 06- | FD073 | FD073 |
| GT 250 Pi | | 250 | 13- | FD073 | FD073 |
| GV 250 | | 250 | 04- | FD073 | MF |
| XRX 400 | | 400 | 05- | FD073 | FD093 |
| GT 650 / S / R | | 650 | 05- | FD073 | FD073 |
| GT 650 i | | 650 | 09-11 | FD176 | FD073 |
| GT 650 Pi | | 650 | 13- | FD176 | FD073 |
| GT 650 Ri | | 650 | 09- | FD176 | FD073 |
| GT 650 X | | 650 | 07- | FD073 | FD073 |
| GV 650 | | 650 | 06- | FD073 | FD073 |
| GV 650 AQUILIA | | 650 | 04- | FD073 | FD295 |
| GV 1000 | | 1000 | 04- | FD073 | FD295 |
| **ITALJET** | | | | | |
| BAZOOKA | | 650 | 06- | FD073 | FD073 |
| GRIFON | | 650 | 06- | FD073 | FD073 |
| **KYMCO** | | | | | |
| CUSTOM DX 150 | | 150 | 94- | FD073 | MF |
| JETIX | | 150 | 10- | FD073 | FD145 |
| **LAMBRETTA** | | | | | |
| PATO 150 N | | 150 | 09- | FD073 | FD073 |
| **MOTOM** | | | | | |
| DOLCEVITA | | 150 | 07- | FD175 | FD073 |
| TRANSCITY | | 150 | 07- | FD169 | FD073 |

## FD 074

mm: 79,0 x 47,8 | 7,0 | A | A

G1054 | G1805 | G1370

| BRAND MARCA | MODEL MODELO | C.C. | YEAR | FRONT | REAR |
|---|---|---|---|---|---|
| **APRILIA** | | | | | |
| SCARABEO 150 4T | | 150 | 98- | FD074 | FD228 |
| SCARABEO 200 / GT | | 200 | 02-06 | FD074 | FD228 |
| SPORT CITY 200 | | 200 | 04- | FD074 | FD228 |
| LEONARDO 250 4T | | 250 | 99- | FD074 | FD228 |
| SCARABEO 250 | | 250 | 04-04 | FD074 | FD228 |
| SPORT CITY 250 | | 250 | 06- | FD074 | FD228 |
| LEONARDO 300 | | 300 | 04- | FD074 | FD228 |
| SPORT CITY CUBE 300 | | 300 | 08- | FD074 | FD228 |
| SCARABEO 400 ie | | 400 | 07- | FD074 | FD228 |
| ARRECIFE 500 | | 500 | 02- | FD074 | FD228 |
| ATLANTIC 500 | | 500 | 02- | FD074 | FD228 |
| SCARABEO 500 | | 500 | 03- | FD074 | FD228 |
| SCARABEO 500 ABS++ | | 500 | 03- | FD074 | FD228 |
| **DERBI** | | | | | |
| RAMBLA 250 ie | | 250 | 08- | FD074 | FD228 |
| RAMBLA 300 ie | | 300 | 10- | FD074 | FD228 |
| **MALAGUTI** | | | | | |
| MADISON RS 250 | | 250 | 06-06 | FD074 | FD228 |
| PASSWORD 250 | | 250 | 05-06 | FD074 | FD228 |
| SPIDER MAX GT 500 | | 500 | 04- | FD074 | FD228 |
| **MZ/MuZ** | | | | | |
| BAGHIRA | | 660 | 00- | FD074 | FD075 |
| MASTIFF | | 660 | 00- | FD074 | FD075 |

## FD 075

mm: 55,8 x 37,2 | 10,0 | A | B

mm: 85,0 x 42,1 | 8,0 | A | B

G1054 | G1805 | G1396

| BRAND MARCA | MODEL MODELO | C.C. | YEAR | FRONT | REAR |
|---|---|---|---|---|---|
| **APRILIA** | | | | | |
| PEGASO 600 4 VALVOLE | | 600 | 91- | FD128 | FD075 |
| PEGASO 650 | | 650 | 98-00 | FD172 | FD075 |
| **BETA** | | | | | |
| ALP 4.0 | | 350 | 03-07 | FD162 | FD075 |
| **CAGIVA** | | | | | |
| W 16 600 | | 600 | 95- | FD089 | FD075 |
| **ITALJET** | | | | | |
| MILLENNIUM 150 | | 150 | 00-01 | FD075 | MF |
| **KAWASAKI** | | | | | |
| BJ 250 ESTRELLA RS | | 250 | 99- | FD075 | FD075 |
| KL 250 SUPER SHERPA | | 250 | 00- | FD204 | FD075 |
| ZR 250 BALIUS II | | 250 | 02- | FD179 | FD075 |
| ZZR 250 | | 250 | 98- | FD090 | FD075 |
| XANTHUS 400 | | 400 | 92- | FD090 | FD075 |
| GPZ 500 S | | 500 | 90-92 | FD075 | MF152 |
| GPZ 500 S | | 500 | 93- | FD104 | FD075 |
| KLE 500 | | 500 | 91- | FD090 | FD075 |
| KLR 600S | | 600 | 90-92 | FD075 | MF |
| KLR 650 C1/C2 | | 650 | 95-07 | FD174 | FD075 |
| **LAVERDA** | | | | | |
| 668 HIDALGO | | 668 | 90- | FD075 | FD075 |
| 700 EL CID | | 700 | 90- | FD075 | FD075 |
| **MZ/MuZ** | | | | | |
| BAGHIRA | | 660 | 00- | FD074 | FD075 |
| MASTIFF | | 660 | 00- | FD074 | FD075 |
| **SHERCO** | | | | | |
| X-RIDE | | 290 | 13- | FD075 | FD075 |

## FD 078

mm: 58,6 x 53,9 | 8,6 | A | A

G1054

| BRAND MARCA | MODEL MODELO | C.C. | YEAR | FRONT | REAR |
|---|---|---|---|---|---|
| **SUZUKI** | | | | | |
| VS 800 GL, INTRUDER | | 800 | 91-92 | FD078 | MF304 |
| VS 1400 GLP | | 1400 | 92- | FD078 | FD111 |
| VS 1400 (S83 USA) | | 1400 | 04- | FD078 | FD078 |



For other models years previous to 1990 visit **www.galferonline.es** · Para otros modelos anteriores al año 1990 visitar **www.galferonline.es**
For consult TÜV (ABE) type approvals visit **www.galfermoto.com --> DOWNLOAD --> TÜV CERTIFICATIONS** · Para consultar las homologaciones TÜV (ABE) visitar **www.galfermoto.com --> DESCARGAS --> CERTIFICACIONES TÜV**

## FD 079

mm: 71,3 x 36,2 | 8,5 | A | A

G1054 | G1805 | G1370 |

| BRAND MARCA | MODEL MODELO | C.C. | YEAR | FRONT | REAR |
|---|---|---|---|---|---|
| **CCM** | | | | | |
| | XTR 250 | 250 | 09- | FD073 | FD079 |
| **CFMOTO** | | | | | |
| | E-CHARM | 150 | 10- | FD187 | FD079 |
| **GILERA-PIAGGIO** | | | | | |
| | 600 RC FOUR VALVE | 600 | 91- | FD089 | FD079 |
| | RC 600 R | 600 | 92-93 | FD089 | FD079 |
| **YAMAHA** | | | | | |
| | FLY ONE | 150 | 92- | FD079 | MF640 |
| | XT 225 | 225 | 92-00 | FD079 | MF |
| | TT 600 S | 600 | 94- | FD079 | FD079 |
| | XT 600 E | 600 | 90-94 | FD129 | FD079 |
| | XT 600 E | 600 | 95- | FD129 | FD079 |
| | XTZ 660 TENERE | 660 | 93-98 | FD129 | FD079 |

## FD 082

mm: 88,0 x 46,0 | 9,0 | A | A

G1054 | G1370 |

| BRAND MARCA | MODEL MODELO | C.C. | YEAR | FRONT | REAR |
|---|---|---|---|---|---|
| **CAGIVA** | | | | | |
| | CANYON | 500 | 99- | FD082 | FD117 |
| | ELEFANT 900 i.e. | 900 | 91-92 | FD082 | FD145 |
| **HONDA** | | | | | |
| | GB 250 CLUB MAN | 250 | 95- | FD082 | MF |
| | XL 600 V TRANSALP | 600 | 91-93 | FD082 | FD103 |
| | NX 650 DOMINATOR | 650 | 93-96 | FD082 | FD103 |
| | NXR 750 AFRICA TWIN | 750 | 91- | FD082 | FD103 |
| | GL 1500 SE GOLD WING | 1500 | 91- | FD082 | FD054 |

## FD 083

mm: 58,5 x 47,6 | 8,7 | A | A

G1054

| BRAND MARCA | MODEL MODELO | C.C. | YEAR | FRONT | REAR |
|---|---|---|---|---|---|
| **SUZUKI** | | | | | |
| | VL 1500 INTRUDER LEGENDARY EASSIC | 1500 | 98-99 | FD066 | FD083 |
| | VL 1500 INTRUDER LEGENDARY CLASSIC | 1500 | 00-01 | FD066 | FD083 |

## FD 086

mm: 77,4 x 42,3 | 7,7 | A | B

mm: 98,8 x 42,3 | 7,5 | A | B

G1054 | G1805 | G1370 | G1396 | G1397

| BRAND MARCA | MODEL MODELO | C.C. | YEAR | FRONT | REAR |
|---|---|---|---|---|---|
| **KAWASAKI** | | | | | |
| | KLR 650 | 650 | 08- | FD086 | FD145 |
| **KEEWAY** | | | | | |
| | VIVA II 150 | 150 | 05- | FD086 | FD175 |
| **PEUGEOT** | | | | | |
| | DJANGO EVASION | 150 | 14- | FD086 | FD220 |
| | DJANGO HERITAGE | 150 | 14- | FD086 | FD220 |

| | | | | |
|---|---|---|---|---|
| METROPOLIS 400i | 400 | 12- | FD138 | FD086 |
| **TRIUMPH** | | | | |
| TRIDENT 750 (left) | 750 | 93- | FD086 | |
| AMERICA | 800 | 05- | FD266 | FD086 |
| BONNEVILLE /T100 | 800 | 04-05 | FD140 | FD086 |
| BONNEVILLE /T100 | 850 | 05-07 | FD140 | FD086 |
| BONNEVILLE EFI /T100 | 800 | 08- | FD140 | FD086 |
| BONNEVILLE SE | 850 | 09- | FD140 | FD086 |
| BONEVILLE ACE | 865 | 15- | FD140 | FD086 |
| BONEVILLE NEW CHURCH | 865 | 15- | FD140 | FD086 |
| BONEVILLE SPIRIT | 865 | 15- | FD140 | FD086 |
| SPEEDMASTER | 865 | 10- | FD140 | FD086 |
| STEVE McQUEEN SE | 865 | 12- | FD140 | FD086 |
| THRUXTON 865 | 865 | 04-07 | FD140 | FD086 |
| THRUXTON 865 EFI | 865 | 08- | FD140 | FD086 |
| THRUXTON 865 ACE | 865 | 15- | FD140 | FD086 |
| DAYTONA 900 T-595 | 900 | 97- | FD099 | FD086 |
| SCRAMBLER | 900 | 06-07 | FD140 | FD086 |
| SPRINT 900 (left) | 900 | 93- | FD086 | |
| SCRAMBLER EFI | 900 | 08- | FD140 | FD086 |
| TIGER 900 (left) | 900 | 93-98 | FD086 | |
| TRIDENT 900 (left) | 900 | 93- | FD086 | |
| TROPHY 900 (left) | 900 | 92-93 | FD086 | |
| DAYTONA 955i | 955 | 99-00 | FD099 | FD086 |
| SPEED TRIPLE 955 i | 955 | 99-01 | FD099 | FD086 |
| SPEED TRIPLE 955 i | 955 | 02- | FD099 | FD086 |
| SPRINT ST 955 | 955 | 99- | FD099 | FD086 |
| SPEED TRIPLE T-509 | 995 | 99- | FD099 | FD086 |
| SPEED TRIPLE 1050 | 1050 | 05-05 | FD262 | FD086 |
| SPEED TRIPLE 1050 | 1050 | 06-07 | FD331 | FD086 |
| SPEED TRIPLE 1050 | 1050 | 08-10 | FD262 | FD086 |
| SPEED TRIPLE 1050 | 1050 | 11-11 | FD262 | FD086 |
| SPEED TRIPLE R | 1050 | 12- | FD373 | FD086 |
| SPRINT ST 1050 | 1050 | 05-05 | FD099 | FD086 |
| SPRINT ST 1050 | 1050 | 06- | FD331 | FD086 |
| 1200-3 (left) | 1200 | 93- | FD086 | |
| 1200-4 (left) | 1200 | 93- | FD086 | |
| TIGER EXPLORER | 1200 | 12- | FD107 | FD086 |
| TROPHY 1200 (left) | 1200 | 91-93 | FD086 | |
| TROPHY 1200 | 1215 | 13- | FD372 | FD086 |
| **YAMAHA** | | | | |
| XTZ 250 X | 250 | 07- | FD086 | FD114 |
| **YAMAHA BRASIL** | | | | |
| TT R 230 | 230 | 08- | FD086 | MF |
| XTZ 250 LANDER | 250 | 07- | FD086 | FD114 |
| XTZ 250 X | 250 | 07- | FD086 | FD114 |
| XTZ 250 Z TENERE | 250 | 11- | FD086 | FD114 |
| YS 250 FAZER | 250 | 06-09 | FD086 | MF |

## FD 087

mm: 74,8 x 54,3 | 8,2 | A | A

G1054 | G1370 |

| BRAND MARCA | MODEL MODELO | C.C. | YEAR | FRONT | REAR |
|---|---|---|---|---|---|
| **YAMAHA** | | | | | |
| | FZR 600 | 600 | 90-95 | FD087 | FD057 |
| | XV 750 VIRAGO | 750 | 93- | FD087 | MF477 |
| | TDM 850 | 850 | 90-01 | FD087 | FD057 |
| | XV 1100 VIRAGO | 1100 | 93-94 | FD087 | MF459 |
| | VENTURE ROYALE 1300 | 1300 | 90- | FD087 | FD057 |
| | XZV 1.300 ROYAL STAR | 1300 | 96-98 | FD087 | FD087 |
| | XZV 1.300 TF ROYAL STAR VENTURE | 1300 | 99- | FD142 | FD087 |
| | XV 1600 WILD STAR | 1600 | 99- | FD142 | FD087 |

## FD 089

mm: 99,8 x 46,2 | 8,3 | A | A

G1054

| BRAND MARCA | MODEL MODELO | C.C. | YEAR | FRONT | REAR |
|---|---|---|---|---|---|
| **APRILIA** | | | | | |
| | TUAREG 600 WIND AE | 600 | 91- | FD089 | FD135 |
| **CAGIVA** | | | | | |
| | W 16 600 | 600 | 95- | FD089 | FD075 |
| **GILERA-PIAGGIO** | | | | | |
| | 600 RC FOUR VALVE | 600 | 91- | FD089 | FD079 |
| | 600 XRT | 600 | 90- | FD089 | FD012 |
| | RC 600 R | 600 | 92-93 | FD089 | FD079 |
| **MOTO GUZZI** | | | | | |
| | QUOTA I.E | 1000 | 91- | FD098 | FD089 |

## FD 090

mm: 95,2 x 34,4 | 8,8 | A | B

mm: 141,0 x 42,4 | 8,3 | A | B

G1054 | G1370 |

| BRAND MARCA | MODEL MODELO | C.C. | YEAR | FRONT | REAR |
|---|---|---|---|---|---|
| **KAWASAKI** | | | | | |
| | ZZR 250 (EX 250 H1) | 250 | 90-97 | FD090 | FD104 |
| | ZZR 250 | 250 | 98- | FD090 | FD075 |
| | XANTHUS 400 | 400 | 92- | FD090 | FD075 |
| | ZEPHYR 400 / X | 400 | 02- | FD090 | FD167 |
| | ZXR 400 | 400 | 95-98 | FD090 | FD111 |
| | ZZR 400 | 400 | 90- | FD141 | FD090 |
| | ER-5 | 500 | 97-00 | FD090 | MF152 |
| | KLE 500 | 500 | 91- | FD090 | FD075 |
| | ZEPHYR 500 | 500 | 91- | FD090 | FD104 |
| | ZZR 500 | 500 | 90- | FD107 | FD090 |
| | ZEPHYR 550 | 550 | 93-95 | FD090 | FD104 |
| | ZEPHYR 550 | 550 | 96- | FD090 | FD167 |
| | ZL 600 ELIMINATOR | 600 | 95- | FD090 | MF |
| | ZX 600 NINJA ZX-6 | 600 | 93-94 | FD107 | FD090 |
| | ZZR 600 | 600 | 91-92 | FD107 | FD090 |
| | ZZR 600 HAMA | 600 | 90- | FD107 | FD090 |
| | ZEPHYR 750 | 750 | 91- | FD090 | FD090 |
| | GPZ 900 R | 900 | 90-96 | FD266 | FD090 |
| | GTR 1000 | 1000 | 94- | FD090 | FD062 |
| | ZG 1000 CONCOURS | 1000 | 94- | FD090 | FD090 |
| | ZEPHYR 1100 | 1100 | 92-92 | FD107 | FD090 |
| | ZEPHYR 1100 | 1100 | 93-95 | FD090 | FD090 |
| | ZEPHYR 1100 RIGHT/DER | 1100 | 96- | FD179 | FD090 |
| | ZZR 1100 | 1100 | 90-92 | FD107 | FD090 |
| **SUZUKI** | | | | | |
| | RG 200 WOLF | 200 | 92- | FD090 | FD111 |
| | BANDIT 250 | 250 | 90- | FD090 | FD045 |
| | GS 400 E | 400 | 91- | FD090 | FD045 |
| | GSX 400 F BANDIT | 400 | 90- | FD090 | FD111 |
| | GSX R 400 | 400 | 90- | FD090 | FD045 |
| | DR 800 S BIG | 800 | 92- | FD090 | FD117 |
| | VX 800 | 800 | 90- | FD090 | FD022 |
| | ZX 800 | 800 | 92- | FD090 | FD022 |
| | GSX 1100 G | 1100 | 90-92 | FD090 | FD022 |
| | GSX 1100 G | 1100 | 93- | FD090 | FD111 |

## FD 092

mm: 94,2 x 31,8 | 7,4 | A | A[1]

G1054 | G1805 | G1396 |

| BRAND MARCA | MODEL MODELO | C.C. | YEAR | FRONT | REAR |
|---|---|---|---|---|---|
| **HONDA** | | | | | |
| | XL 250 R | 250 | 90- | FD092 | FD093 |

## FD 093

mm 75,0 x 36,0 | 10,0 | A | A1

G1054 | G1805 | G1396 |

| BRAND MARCA | MODEL MODELO | C.C. | YEAR | FRONT | REAR |
|---|---|---|---|---|---|
| **HONDA** | | | | | |
| | XR 230 | 230 | 05- | FD164 | FD093 |
| | CRF 250 L | 250 | 12- | FD164 | FD093 |
| | XL 250 R | 250 | 90- | FD092 | FD093 |
| | XRE 300 | 300 | 09- | FD164 | FD093 |
| | XRE 300 C-ABS | 300 | 10- | FD344 | FD093 |
| | NX 4 DOMINATOR | 400 | 99-02 | FD164 | FD093 |
| | NX 4 FALCON | 400 | 03- | FD164 | FD093 |
| | XR 650 L | 650 | 93- | FD164 | FD093 |
| **HONDA BRAZIL** | | | | | |
| | XRE 300 | 300 | 09- | FD164 | FD093 |
| | XRE 300 C-ABS | 300 | 10- | FD344 | FD093 |
| **HONDA MALASIA** | | | | | |
| | CRF 250 L | 250 | 12- | FD164 | FD093 |
| **HYOSUNG** | | | | | |
| | XRX 400 | 400 | 05- | FD073 | FD093 |

## FD 094

mm 47,4 x 37,0 | 10,0 | A | B

mm 85,0 x 42,1 | 7,8 | A | B

G1054 | G1805 | G1396 |

| BRAND MARCA | MODEL MODELO | C.C. | YEAR | FRONT | REAR |
|---|---|---|---|---|---|
| **AEON** | | | | | |
| | NOX 150 | 150 | 06- | FD094 | MF |
| | PULSAR 150 | 150 | 06- | FD094 | MF |
| | ELITE 200i | 200 | 11- | FD187 | FD094 |
| | URBAN 350i | 350 | 11- | FD187 | FD094 |
| **TGB** | | | | | |
| | SUNSET 150 | 150 | 07- | FD094 | MF |
| | 409 F | 150 | 02-05 | FD094 | MF |

## FD 095

mm 41,5 x 45,3 | 7,7 | A | A

G1054 | G1805 | G1396 | G1397

| BRAND MARCA | MODEL MODELO | C.C. | YEAR | FRONT | REAR |
|---|---|---|---|---|---|
| **VENTO** | | | | | |
| | PHANTERA 150 | 150 | 06- | FD095 | MF |
| | PHANTOM r4i | 150 | 06- | FD095 | MF |

## FD 096

mm 81,0 x 41,8 | 9,0 | A | A

G1054 | G1370 |

| BRAND MARCA | MODEL MODELO | C.C. | YEAR | FRONT | REAR |
|---|---|---|---|---|---|
| **HONDA** | | | | | |
| | CBR 600 F2 | 600 | 91-94 | FD096 | FD134 |
| | XRV 750 AFRICA TWIN | 750 | 90-93 | FD096 | FD103 |

## FD 098

mm 120,0 x 52,0 | 8,0 | A | A

G1054 |

| BRAND MARCA | MODEL MODELO | C.C. | YEAR | FRONT | REAR |
|---|---|---|---|---|---|
| **MOTO GUZZI** | | | | | |
| | QUOTA I.E | 1000 | 91- | FD098 | FD089 |

## FD 099

mm 69,9 x 54,4 | 8,5 | A | A

G1054 | G1370 | G1375 |

| BRAND MARCA | MODEL MODELO | C.C. | YEAR | FRONT | REAR |
|---|---|---|---|---|---|
| **SUZUKI** | | | | | |
| | GSX R 400 R | 400 | 90- | FD099 | FD045 |
| | GSX 600 R | 600 | 92-96 | FD099 | FD045 |
| | GSX R 750 L, LM, W | 750 | 91-93 | FD099 | FD111 |
| | RF 900 R | 900 | 94-95 | FD099 | FD189 |
| | RF 900 RS2 | 900 | 96- | FD099 | FD189 |
| | GSF 1200 BANDIT | 1200 | 95-99 | FD099 | FD111 |
| **TRIUMPH** | | | | | |
| | DAYTONA 600 | 600 | 03- | FD099 | FD103 |
| | SPEED FOUR | 600 | 03- | FD099 | FD103 |
| | TT 600 | 600 | 00- | FD099 | FD103 |
| | DAYTONA 650 | 650 | 03-05 | FD099 | FD103 |
| | DAYTONA 750 SPORT | 750 | 91- | FD099 | FD117 |
| | DAYTONA 900 | 900 | 93-96 | FD099 | FD117 |
| | DAYTONA 900 T-595 | 900 | 97- | FD099 | FD086 |
| | TRIDENT 900 SPRINT | 900 | 95- | FD099 | FD117 |
| | TROPHY 900 | 900 | 94- | FD099 | FD117 |
| | DAYTONA 955i | 955 | 99-00 | FD099 | FD086 |
| | DAYTONA 955i | 955 | 01-01 | FD099 | FD103 |
| | DAYTONA 955i | 955 | 02- | FD099 | FD103 |
| | SPEED TRIPLE 955 i | 955 | 99-01 | FD099 | FD086 |
| | SPEED TRIPLE 955 i | 955 | 02- | FD099 | FD086 |
| | SPRINT RS | 955 | 00- | FD099 | FD117 |
| | SPRINT ST 955 | 955 | 99- | FD099 | FD086 |
| | SPEED TRIPLE T-509 | 995 | 99- | FD099 | FD086 |
| | SPRINT ST 1050 | 1050 | 05-05 | FD099 | FD086 |
| | DAYTONA 1100 SPORT | 1100 | 91- | FD099 | FD117 |
| | TROPHY 1200 | 1200 | 94- | FD099 | FD117 |
| | THUNDERBIRD 1600 | 1600 | 09- | FD099 | FD172 |
| | THUNDERBIRD COMMANDER | 1700 | 14- | FD099 | FD172 |
| | THUNDERBIRD STORM 1700 | 1700 | 11- | FD099 | FD172 |
| | ROCKET III | 2300 | 04- | FD099 | FD172 |
| | ROCKET III ROADSTER | 2300 | 10- | FD099 | FD172 |
| **YAMAHA** | | | | | |
| | TZ 250 | 250 | 90- | FD099 | FD163 |

## FD 100

mm 68,0 x 53,6 | 9,0 | A | A

G1054 |

| BRAND MARCA | MODEL MODELO | C.C. | YEAR | FRONT | REAR |
|---|---|---|---|---|---|
| **HONDA** | | | | | |
| | RS 250 R | 250 | 90-92 | FD100 | FD113 |

## FD 101

mm 97,5 x 58,0 | 10,8 | A | B

mm 117,3 x 48,0 | 8,5 | A | B

G1054 |

| BRAND MARCA | MODEL MODELO | C.C. | YEAR | FRONT | REAR |
|---|---|---|---|---|---|
| **SUZUKI** | | | | | |
| | DR 650 R, RS | 650 | 90-91 | FD101 | FD120 |
| | DR 650 RL,RM,RSL | 650 | 91-91 | FD101 | FD120 |
| | DR 650 RSE | 650 | 92-93 | FD101 | FD120 |
| | DR 650 RE | 650 | 94-95 | FD101 | FD120 |
| | DR 800 S, SL BIG | 800 | 90-91 | FD101 | FD120 |

## FD 103

mm 86,0 x 36,7 | 10,6 | A | A1

G1054 | G1805 | G1371 |

| BRAND MARCA | MODEL MODELO | C.C. | YEAR | FRONT | REAR |
|---|---|---|---|---|---|
| **BUELL** | | | | | |
| | BLAST | 500 | 00- | FD140 | FD103 |
| | XB 9 R FIREBOLT F | 984 | 02- | FD402 | FD103 |
| | XB 9 S LIGHTNING F | 984 | 03- | FD402 | FD103 |
| | XB 9 SX CITYX | 984 | 06- | FD402 | FD103 |
| | M2 CYCLONE | 1200 | 00- | FD384 | FD103 |
| | S3 THUNDERBOLT | 1200 | 00- | FD384 | FD103 |
| | SPECIAL M2 CYCLONE | 1200 | 00- | FD226 | FD103 |
| | X1 LIGHTNING | 1200 | 00- | FD384 | FD103 |
| | XB 12 R FIREBOLT | 1200 | 06- | FD402 | FD103 |
| | XB 12 S LIGHTNING | 1200 | 06- | FD402 | FD103 |
| | XB 12 SS LIGHTNING LONG | 1200 | 06- | FD402 | FD103 |
| | XB 12 X ULYSSES | 1200 | 06-08 | FD402 | FD103 |
| | XB 12 XT ULYSSES | 1200 | 09- | FD402 | FD103 |
| **HONDA** | | | | | |
| | PANTHEON 150 | 150 | 03- | FD207 | FD103 |
| | CB 250 HORNET | 250 | 96- | FD148 | FD103 |
| | FES 250 FORESIGHT DD | 250 | 00- | FD207 | FD103 |
| | FES 250 FORZA, REFLEX | 250 | 00-04 | FD207 | FD103 |
| | FES 250 JAZZ /ABS | 250 | 00-04 | FD207 | FD103 |
| | VTR 250 | 250 | 98-08 | FD140 | FD103 |
| | VTR 250 i | 250 | 09- | FD140 | FD103 |
| | VTR 250 F | 250 | 13- | FD140 | FD103 |
| | VTZ 250 XELVIS | 250 | 97- | FD266 | FD103 |
| | CB 400 FOUR | 400 | 97-00 | FD266 | FD103 |
| | CB 500 F | 500 | 13- | FD266 | FD103 |
| | CB 500 F ABS | 500 | 13- | FD266 | FD103 |
| | CB 500 X | 500 | 13- | FD266 | FD103 |
| | CB 500 X ABS | 500 | 13- | FD266 | FD103 |
| | CBR 500 R | 500 | 13- | FD266 | FD103 |
| | CBR 500 R ABS | 500 | 13- | FD266 | FD103 |
| | XL 600 V TRANSALP | 600 | 91-93 | FD082 | FD103 |
| | XL 600 V TRANSALP | 600 | 94-96 | FD140 | FD103 |
| | XL 600 V TRANSALP DER. | 600 | 97-99 | FD164 | FD103 |
| | CB 650 F ABS | 650 | 14- | FD266 | FD103 |
| | CBR 650 F ABS | 650 | 14- | FD266 | FD103 |
| | FMX 650 | 650 | 05- | FD266 | FD103 |
| | NTV 650 DEAUVILLE | 650 | 98-01 | FD172 | FD103 |
| | NTV 650 REVERE | 650 | 91- | FD266 | FD103 |
| | NX 650 DOMINATOR | 650 | 93-96 | FD082 | FD103 |
| | XL 650 V TRANSALP DER. | 650 | 00- | FD164 | FD103 |
| | CTX 700 | 700 | 13- | FD266 | FD103 |
| | CTX 700 ABS | 700 | 13- | FD266 | FD103 |
| | CTX 700 N | 700 | 13- | FD266 | FD103 |
| | CTX 700 N ABS | 700 | 13- | FD266 | FD103 |
| | XL 700 V TRANSALP DER. | 700 | 08- | FD164 | FD103 |
| | NXR 750 AFRICA TWIN | 750 | 91- | FD082 | FD103 |
| | XRV 750 AFRICA TWIN | 750 | 90-93 | FD096 | FD103 |



For other models years previous to 1990 visit **www.galferonline.es** · Para otros modelos anteriores al año 1990 visitar **www.galferonline.es**
For consult TÜV (ABE) type approvals visit **www.galfermoto.com --> DOWNALOAD --> TÜV CERTIFICATIONS** · Para consultar las homologaciones TÜV (ABE) visitar **www.galfermoto.com --> DESCARGAS --> CERTIFICACIONES TÜV**

| | | | | |
|---|---|---|---|---|
| XRV 750 AFRICA TWIN | 750 | 94- | FD164 | FD103 |
| **HONDA INDONESIA** | | | | |
| CBR 150 R | 150 | 11- | FD298 | FD103 |
| **HONDA MALASIA** | | | | |
| CBR 250 R C-ABS | 250 | 11- | FD344 | FD103 |
| **KAWASAKI** | | | | |
| VERSYS 650 | 650 | 15- | FD266 | FD103 |
| Z 750 R | 750 | 11- | FD371 | FD103 |
| Z 750 R SE | 750 | 12- | FD371 | FD103 |
| Z 800 | 800 | 13- | FD331 | FD103 |
| Z 800 ABS | 800 | 13- | FD331 | FD103 |
| Z 800e | 800 | 13- | FD266 | FD103 |
| Z 800e ABS | 800 | 13- | FD331 | FD103 |
| VERSYS 1000 | 1000 | 12-14 | FD107 | FD103 |
| VERSYS 1000 | 1000 | 15- | FD107 | FD103 |
| **KAWASAKI MALASIA** | | | | |
| Z 800 | 800 | 13- | FD331 | FD103 |
| Z 800 ABS | 800 | 13- | FD331 | FD103 |
| Z 800e | 800 | 13- | FD266 | FD103 |
| Z 800e ABS | 800 | 13- | FD331 | FD103 |
| **SUZUKI** | | | | |
| SFV 400 GLADIUS RIGHT/DER | 400 | 10- | FD179 | FD103 |
| XF 650 FREEWIND | 650 | 97- | FD179 | FD103 |
| **SUZUKI INDONESIA** | | | | |
| GW 250 INAZUMA | 250 | 12- | FD266 | FD103 |
| **TRIUMPH** | | | | |
| DAYTONA 600 | 600 | 03- | FD099 | FD103 |
| SPEED FOUR | 600 | 03- | FD099 | FD103 |
| TT 600 | 600 | 00- | FD099 | FD103 |
| DAYTONA 650 | 650 | 03-05 | FD099 | FD103 |
| DAYTONA TRIPLE | 675 | 06-08 | FD331 | FD103 |
| DAYTONA 675 | 675 | 09- | FD414 | FD103 |
| DAYTONA 675 SE | 675 | 09- | FD414 | FD103 |
| DAYTONA 675 R | 675 | 11-12 | FD373 | FD103 |
| DAYTONA 675 R | 675 | 13- | FD373 | FD103 |
| STREET TRIPLE | 675 | 07- | FD140 | FD103 |
| STREET TRIPLE R | 675 | 09-12 | FD331 | FD103 |
| STREET TRIPLE R | 675 | 13- | FD331 | FD103 |
| STREET TRIPLE RX | 675 | 15- | FD331 | FD103 |
| TIGER 800 | 800 | 11- | FD266 | FD103 |
| TIGER 800 XC | 800 | 11-14 | FD266 | FD103 |
| TIGER 800 XCx | 800 | 15- | FD266 | FD103 |
| TIGER 800 XRx | 800 | 15- | FD266 | FD103 |
| DAYTONA 955i | 955 | 01-01 | FD099 | FD103 |
| DAYTONA 955i | 955 | 02- | FD099 | FD103 |
| **YAMAHA** | | | | |
| XJ 6 S DIVERSION (FZ 6 R USA) | 600 | 09- | FD169 | FD103 |
| XJ 6 S DIVERSION ABS | 600 | 09- | FD169 | FD103 |
| XJ 6 S DIVERSION F | 600 | 10- | FD169 | FD103 |
| XJ 6 S DIVERSION NAKED | 600 | 09- | FD169 | FD103 |

## FD 104

| mm | A | B |
|---|---|---|
| 75,8 x 27,6 | 10,0 | |
| 106,0 x 38,6 | 7,5 | |

G1054

| BRAND MARCA | MODEL MODELO | C.C. | YEAR | FRONT | REAR |
|---|---|---|---|---|---|
| **KAWASAKI** | | | | | |
| KR-1S 250C2 | | 250 | 90- | FD107 | FD104 |
| ZZR 250 (EX 250 H1) | | 250 | 90-97 | FD090 | FD104 |
| GPZ 500 S | | 500 | 93- | FD104 | FD075 |
| ZEPHYR 500 | | 500 | 91- | FD090 | FD104 |
| ZEPHYR 550 | | 550 | 93-95 | FD090 | FD104 |
| **SUZUKI** | | | | | |
| RGV 250 GAMMA | | 250 | 91-96 | FD107 | FD104 |

## FD 107

mm: 69,7 x 46,0 | A: 8,5 | A

G1054 | G1370 | G1375 | G1003 | G1300

| BRAND MARCA | MODEL MODELO | C.C. | YEAR | FRONT | REAR |
|---|---|---|---|---|---|
| **KAWASAKI** | | | | | |
| KR-1S 250C2 | | 250 | 90- | FD107 | FD104 |
| ZZR 500 | | 500 | 90- | FD107 | FD090 |
| ZX 600 NINJA ZX-6 | | 600 | 93-94 | FD107 | FD090 |
| ZX-6R | | 600 | 95-97 | FD107 | FD167 |
| ZZR 600 | | 600 | 91-92 | FD107 | FD090 |
| ZZR 600 | | 600 | 93- | FD107 | FD167 |
| ZZR 600 HAMA | | 600 | 90- | FD107 | FD090 |
| ZXR 750 R | | 750 | 91-95 | FD107 | FD111 |
| ZX-9R NINJA | | 900 | 94-95 | FD107 | FD167 |
| VERSYS 1000 | | 1000 | 12-14 | FD107 | FD103 |
| VERSYS 1000 | | 1000 | 15- | FD107 | FD103 |
| ZEPHYR 1100 | | 1100 | 92-92 | FD107 | FD090 |
| ZX 1100 | | 1100 | 93- | FD107 | FD111 |
| ZZR 1100 | | 1100 | 90-92 | FD107 | FD090 |
| ZZR 1100 | | 1100 | 93-01 | FD107 | FD111 |
| ZZR 1200 | | 1200 | 01- | FD107 | FD111 |
| VN 1700 VOYAGER | | 1700 | 09- | FD107 | FD179 |
| VN 1700 VOYAGER CUSTOM ABS | | 1700 | 11- | FD107 | FD179 |
| VN 2000 | | 2000 | 04- | FD107 | FD179 |
| **SUZUKI** | | | | | |
| RG 200 GAMMA | | 200 | 92- | FD107 | FD111 |
| RGV 250 GAMMA | | 250 | 91-96 | FD107 | FD104 |
| GOOSE 350 | | 350 | 92- | FD107 | FD111 |
| GSR 400 | | 400 | 06- | FD107 | FD359 |
| GSX 400 S KATANA | | 400 | 92- | FD107 | FD111 |
| GSR 600 | | 600 | 06- | FD107 | FD359 |
| GSX R 600 SRAD | | 600 | 97-03 | FD107 | FD111 |
| GSF 650 BANDIT /S/ | | 650 | 07- | FD107 | FD134 |
| GSF 650 BANDIT /S/ ABS | | 650 | 07- | FD107 | FD134 |
| GSX 650 F | | 650 | 08- | FD107 | FD134 |
| GSX R 750 SRAD | | 750 | 00-03 | FD107 | FD111 |
| SV 1000 | | 1000 | 03- | FD107 | FD134 |
| SV 1000 / S / SZ | | 1000 | 03- | FD107 | FD134 |
| TL 1000 S | | 1000 | 97- | FD107 | FD111 |
| GSF 1200 BANDIT / S | | 1200 | 06- | FD107 | FD134 |
| GSF 1200 BANDIT ABS | | 1200 | 06- | FD107 | FD134 |
| GSF 1250 BANDIT A/S/SA | | 1250 | 07-08 | FD107 | FD134 |
| GSF 1250 BANDIT FA | | 1250 | 09- | FD107 | FD134 |
| GSF 1250 BANDIT /SA | | 1250 | 10- | FD107 | FD134 |
| VL 1500 INTRUDER RIGHT/DER | | 1500 | 02- | FD179 | FD107 |
| TL 1600 S | | 1600 | 97- | FD107 | FD111 |
| **TRIUMPH** | | | | | |
| TIGER EXPLORER | | 1200 | 12- | FD107 | FD086 |

## FD 109

mm: 59,0 x 58,0 | A: 8,0 | A

G1054 | G1805

| BRAND MARCA | MODEL MODELO | C.C. | YEAR | FRONT | REAR |
|---|---|---|---|---|---|
| **SUZUKI** | | | | | |
| GSX 600 F | | 600 | 91-97 | FD109 | FD111 |

## FD 110

mm: 94,2 x 31,8 | A: 10,5 | A[1]

G1054 | G1805

| BRAND MARCA | MODEL MODELO | C.C. | YEAR | FRONT | REAR |
|---|---|---|---|---|---|
| **HONDA** | | | | | |
| RVF 750 RR (RC45) | | 750 | 94- | FD148 | FD110 |

## FD 111

mm: 53,0 x 53,0 | A: 8,6 | A

G1054 | G1805 | G1371

| BRAND MARCA | MODEL MODELO | C.C. | YEAR | FRONT | REAR |
|---|---|---|---|---|---|
| **KAWASAKI** | | | | | |
| ZXR 400 | | 400 | 90-94 | FD141 | FD111 |
| ZXR 400 | | 400 | 95-98 | FD090 | FD111 |
| ZXR 750 R | | 750 | 91-95 | FD107 | FD111 |
| GPZ 1100 S | | 1100 | 95- | FD266 | FD111 |
| ZRX 1100 | | 1100 | 97-00 | FD156 | FD111 |
| ZX 1100 | | 1100 | 93- | FD107 | FD111 |
| ZZR 1100 | | 1100 | 93-01 | FD107 | FD111 |
| ZZR 1200 | | 1200 | 01- | FD107 | FD111 |
| ZRX 1200 | | 1200 | 04- | FD156 | FD111 |
| ZRX 1200 S | | 1200 | 02-03 | FD156 | FD111 |
| ZRX 1200 S | | 1200 | 04- | FD156 | FD111 |
| ZRX 1200 R | | 1200 | 04- | FD156 | FD111 |
| ZX-12 R | | 1200 | 00-03 | FD156 | FD111 |
| ZX-12 R | | 1200 | 04- | FD290 | FD111 |
| **SUZUKI** | | | | | |
| RG 200 GAMMA | | 200 | 92- | FD107 | FD111 |
| RG 200 WOLF | | 200 | 92- | FD090 | FD111 |
| GOOSE 350 | | 350 | 92- | FD107 | FD111 |
| GSX 400 F BANDIT | | 400 | 90- | FD090 | FD111 |
| GSX 400 INAZUMA | | 400 | 00- | FD176 | FD111 |
| GSX 400 S KATANA | | 400 | 92- | FD107 | FD111 |
| SV 400 /S IZ. | | 400 | 99- | FD174 | FD111 |
| GS 500 E | | 500 | 96- | FD179 | FD111 |
| GS 500 F | | 500 | 06- | FD179 | FD111 |
| GSF 600 N BANDIT | | 600 | 95-99 | FD266 | FD111 |
| GSF 600 N BANDIT IZQ. | | 600 | 00- | FD174 | FD111 |
| GSX 600 F | | 600 | 91-97 | FD109 | FD111 |
| GSX 600 F IZQ. (KATANA 600 USA) | | 600 | 98-03 | FD174 | FD111 |
| GSX 600 F IZQ. (KATANA 600 USA) | | 600 | 04- | FD174 | FD111 |
| GSX R 600 SRAD | | 600 | 97-03 | FD107 | FD111 |
| RF 600 R | | 600 | 93- | FD266 | FD111 |
| SV 650 /S IZQ. | | 650 | 99-02 | FD174 | FD111 |
| GSX 750 F IZQ | | 750 | 98- | FD174 | FD111 |
| GSX 750 F VS IZQ. (KATANA 750 USA) | | 750 | 99-02 | FD174 | FD111 |
| GSX 750 F IZQ | | 750 | 03- | FD179 | FD111 |
| GSX R 750 L, LM, W | | 750 | 91-93 | FD099 | FD111 |
| GSX R 750 W | | 750 | 94-95 | FD156 | FD111 |
| GSX R 750 SRAD | | 750 | 96-99 | FD156 | FD111 |
| GSX R 750 SRAD | | 750 | 00-03 | FD107 | FD111 |
| TL 1000 R | | 1000 | 98- | FD156 | FD111 |
| TL 1000 S | | 1000 | 97- | FD107 | FD111 |
| GSX 1100 G | | 1100 | 93- | FD090 | FD111 |
| GSX R 1100 W | | 1100 | 93- | FD156 | FD111 |
| GSF 1200 BANDIT | | 1200 | 95-99 | FD099 | FD111 |
| GSF 1200 BANDIT / S | | 1200 | 00-05 | FD156 | FD111 |
| GSX 1200 | | 1200 | 99- | FD176 | FD111 |
| INAZUMA 1200 | | 1200 | 98- | FD176 | FD111 |
| GSX 1300 R HAYABUSA | | 1300 | 99-07 | FD156 | FD111 |
| VS 1400 GLP | | 1400 | 92- | FD078 | FD111 |
| TL 1600 S | | 1600 | 97- | FD107 | FD111 |

## FD 113

mm: 52,0 x 36,6 | A: 8,3 | A

G1054

| BRAND MARCA | MODEL MODELO | C.C. | YEAR | FRONT | REAR |
|---|---|---|---|---|---|
| **HONDA** | | | | | |
| NSF 250 R | | 250 | 12- | FD331 | FD113 |
| RS 250 R | | 250 | 90-92 | FD100 | FD113 |
| RS 250 R | | 250 | 93-96 | FD068 | FD113 |

## FD 114

mm 62,0 x 40,6 — A | mm 9,5 — A

G1054 | G1805 | G1396 |

| BRAND MARCA | MODEL MODELO | C.C. | YEAR | FRONT | REAR |
|---|---|---|---|---|---|
| **YAMAHA** | | | | | |
| SEROW 250 | | 250 | 04- | FD214 | FD114 |
| XG 250 TRICKER | | 250 | 04- | FD214 | FD114 |
| XT 250 X | | 250 | 06- | FD214 | FD114 |
| XTZ 250 X | | 250 | 07- | FD086 | FD114 |
| YS 250 FAZER | | 250 | 11- | FD117 | FD114 |
| **YAMAHA BRASIL** | | | | | |
| XTZ 250 LANDER | | 250 | 07- | FD086 | FD114 |
| XTZ 250 X | | 250 | 07- | FD086 | FD114 |
| XTZ 250 Z TENERE | | 250 | 11- | FD086 | FD114 |
| YS 250 FAZER | | 250 | 11- | FD117 | FD114 |

## FD 117

mm 77,4 x 42,3 — A | mm 7,7 — B

mm 98,8 x 42,4 — A | mm 7,5 — B

G1054 | G1805 | G1370 | G1397 |

| BRAND MARCA | MODEL MODELO | C.C. | YEAR | FRONT | REAR |
|---|---|---|---|---|---|
| **CAGIVA** | | | | | |
| CANYON | | 500 | 99- | FD082 | FD117 |
| CANYON | | 600 | 95- | FD129 | FD117 |
| CANYON | | 900 | 97- | FD172 | FD117 |
| GRAN CANYON | | 900 | 99- | FD266 | FD117 |
| NAVIGATOR | | 1000 | 00- | FD266 | FD117 |
| **DAELIM** | | | | | |
| ROADWIN 250 | | 250 | 08-10 | FD140 | FD117 |
| ROADWIN 250 R FI | | 250 | 11- | FD140 | FD117 |
| S2 250 FREEWAY | | 250 | 06- | FD140 | FD117 |
| **HYOSUNG** | | | | | |
| EXCEED 150 | | 150 | 03- | FD153 | FD117 |
| **KAWASAKI** | | | | | |
| NINJA 250 R | | 250 | 08-12 | FD117 | FD117 |
| Z 250 SL | | 250 | 15- | FD117 | FD117 |
| NINJA 300 R | | 300 | 13- | FD117 | FD117 |
| NINJA 300 R SP (ABS) | | 300 | 13- | FD117 | FD117 |
| Z 300 | | 300 | 15- | FD117 | FD117 |
| **KAWASAKI INDONESIA** | | | | | |
| ZX 130 VR | | 130 | 12- | FD117 | MF |
| NINJA R | | 150 | 10- | FD117 | FD117 |
| NINJA RR | | 150 | 10- | FD117 | FD117 |
| NINJA SPECIAL EDITION | | 150 | 10- | FD117 | FD117 |
| NINJA SS | | 150 | 10- | FD117 | FD117 |
| NINJA 250 R | | 250 | 08-12 | FD117 | FD117 |
| **KAWASAKI MALASIA** | | | | | |
| NINJA KRR ZX 150 | | 150 | 08- | FD117 | FD117 |
| NINJA 250 R | | 250 | 08-12 | FD117 | FD117 |
| Z 250 | | 250 | 13- | FD117 | FD117 |
| **SUZUKI** | | | | | |
| UH 200 BURGMAN | | 200 | 14- | FD117 | FD315 |
| UH 200 BURGMAN ABS | | 200 | 14- | FD117 | FD315 |
| DR 800 S BIG | | 800 | 92- | FD090 | FD117 |
| **SUZUKI INDONESIA** | | | | | |
| SATRIA F 150 | | 150 | 11- | FD117 | FD259 |
| **SUZUKI MALASIA** | | | | | |
| BELANG R 150 | | 150 | 11- | FD117 | FD259 |
| **TRIUMPH** | | | | | |
| DAYTONA 750 SPORT | | 750 | 91- | FD099 | FD117 |
| TRIDENT 750 (right) | | 750 | 93- | FD117 | FD117 |
| DAYTONA 900 | | 900 | 93-96 | FD099 | FD117 |
| SPRINT 900 (right) | | 900 | 93- | FD117 | FD117 |
| TIGER 900 (right) | | 900 | 93-98 | FD117 | FD117 |
| TRIDENT 900 (right) | | 900 | 93- | FD117 | FD117 |
| TRIDENT 900 SPRINT | | 900 | 95- | FD099 | FD117 |
| TROPHY 900 (right) | | 900 | 92-93 | FD117 | FD117 |
| TROPHY 900 | | 900 | 94- | FD099 | FD117 |
| SPRINT RS | | 955 | 00- | FD099 | FD117 |
| TIGER 955 | | 955 | 99- | FD140 | FD117 |
| TIGER 1050 | | 1050 | 07- | FD331 | FD117 |
| TIGER 1050 ABS | | 1050 | 07- | FD331 | FD117 |
| TIGER SPORT 1050 ABS | | 1050 | 13- | FD331 | FD117 |
| DAYTONA 1100 SPORT | | 1100 | 91- | FD099 | FD117 |
| 1200-3 (right) | | 1200 | 93- | FD117 | FD117 |
| 1200-4 (right) | | 1200 | 93- | FD117 | FD117 |
| TROPHY 1200 (right) | | 1200 | 91-93 | FD117 | FD117 |
| TROPHY 1200 | | 1200 | 94- | FD099 | FD117 |
| **YAMAHA** | | | | | |
| YBR 250 | | 250 | 07- | FD117 | MF640 |
| YS 250 FAZER | | 250 | 06-10 | FD117 | MF640 |
| YS 250 FAZER | | 250 | 11- | FD117 | FD114 |
| **YAMAHA BRASIL** | | | | | |
| YS 250 FAZER | | 250 | 10-10 | FD117 | MF |
| YS 250 FAZER | | 250 | 11- | FD117 | FD114 |

## FD 118

mm 67,4 x 50,7 — A | mm 7,0 — A

G1054 | G1370 |

| BRAND MARCA | MODEL MODELO | C.C. | YEAR | FRONT | REAR |
|---|---|---|---|---|---|
| **GILERA-PIAGGIO** | | | | | |
| 600 NORDWEST | | 600 | 91- | FD118 | FD012 |
| RC 600 R, COBRA | | 600 | 94- | FD118 | FD170 |

## FD 119

mm 99,6 x 52,0 — A | mm 8,0 — A

G1054 |

| BRAND MARCA | MODEL MODELO | C.C. | YEAR | FRONT | REAR |
|---|---|---|---|---|---|
| **GILERA-PIAGGIO** | | | | | |
| 350 NORDWEST | | 491 | 94- | FD119 | FD012 |

## FD 120

mm 83,0 x 47,6 — A | mm 9,6 — B

mm 99,1 x 44,0 — A | mm 7,4 — B

G1054 | G1805 |

| BRAND MARCA | MODEL MODELO | C.C. | YEAR | FRONT | REAR |
|---|---|---|---|---|---|
| **SUZUKI** | | | | | |
| DR 650 R, RS | | 650 | 90-91 | FD101 | FD120 |
| DR 650 RL,RM,RSL | | 650 | 91-91 | FD101 | FD120 |
| DR 650 RSE | | 650 | 92-93 | FD101 | FD120 |
| DR 650 RE | | 650 | 94-95 | FD101 | FD120 |
| DR 800 S, SL BIG | | 800 | 90-91 | FD101 | FD120 |

## FD 121

mm 74,3 x 53,8 — A | mm 9,2 — A

G1054 | G1370 |

| BRAND MARCA | MODEL MODELO | C.C. | YEAR | FRONT | REAR |
|---|---|---|---|---|---|
| **MZ/MuZ** | | | | | |
| SKORPION | | 500 | 94- | FD121 | FD170 |
| **YAMAHA** | | | | | |
| FZR 600 GENESIS | | 600 | 91-95 | FD121 | FD057 |
| V MAX 1200 VMX | | 1200 | 93-94 | FD121 | FD057 |
| V MAX 1200 VMX | | 1200 | 95-02 | FD121 | FD057 |
| V MAX 1200 XMS | | 1200 | 03- | FD121 | FD057 |
| XJR 1200 | | 1200 | 94-94 | FD121 | FD057 |

## FD 124

mm 59,0 x 61,5 — A | mm 13,0 — A

G1054 |

| BRAND MARCA | MODEL MODELO | C.C. | YEAR | FRONT | REAR |
|---|---|---|---|---|---|
| **CSR** | | | | | |
| CUSTOM 250 AUTOMATICA | | 250 | 06- | FD124 | FD127 |
| CRUISER 250 AUTOMATICA | | 250 | 06- | FD124 | FD127 |
| **HARLEY DAVIDSON** | | | | | |
| FLSTS HERITAGE SPRINGER | | 1340 | 00- | FD124 | FD235 |
| FXSTS/i SOFTAIL SPRINGER | | 1340 | 00- | FD124 | FD235 |
| FLSTSB SOFTAIL CROSS BONES | | 1450 | 08- | FD124 | FD235 |
| FLSTSC/i SPRINGER CLASSIC | | 1450 | 05- | FD124 | FD235 |
| FLSTSC/i SPRINGER CLASSIC SOFTAIL | | 1450 | 06- | FD124 | FD375 |
| FLHR SERIES | | 1340 | 94-99 | FD124 | FD125 |
| FLHRCI SERIES | | 1340 | 94-99 | FD124 | FD125 |

## FD 125

mm 103,4 x 62,5 — A | mm 12,0 — A

G1054 |

| BRAND MARCA | MODEL MODELO | C.C. | YEAR | FRONT | REAR |
|---|---|---|---|---|---|
| **HARLEY DAVIDSON** | | | | | |
| FLHR SERIES | | 1340 | 94-99 | FD124 | FD125 |
| FLHRCI SERIES | | 1340 | 94-99 | FD124 | FD125 |

## FD 127

mm 78,8 x 42,6 — A | mm 10,6 — A

G1054 |

| BRAND MARCA | MODEL MODELO | C.C. | YEAR | FRONT | REAR |
|---|---|---|---|---|---|
| **CSR** | | | | | |
| CUSTOM 250 AUTOMATICA | | 250 | 06- | FD124 | FD127 |
| CRUISER 250 AUTOMATICA | | 250 | 06- | FD124 | FD127 |
| **YAMAHA** | | | | | |
| XV 250 VIRAGO | | 250 | 91-92 | FD127 | MF451 |
| XV 750 | | 750 | 94-94 | FD127 | MF477 |



For other models years previous to 1990 visit **www.galferonline.es** - Para otros modelos anteriores al año 1990 visitar **www.galferonline.es**
For consult TÜV (ABE) type approvals visit **www.galfermoto.com --> DOWNALOAD --> TÜV CERTIFICATIONS** - Para consultar las homologaciones TÜV (ABE) visitar **www.galfermoto.com --> DESCARGAS --> CERTIFICACIONES TÜV**

## FD 128

mm: 79,3 x 46,2 | 9,0 | A | A

G1054 | G1805 |

| BRAND MARCA | MODEL MODELO | C.C. | YEAR | FRONT | REAR |
|---|---|---|---|---|---|
| **APRILIA** | | | | | |
| | PEGASO 600 4 VALVOLE | 600 | 91- | FD128 | FD075 |

## FD 129

mm: 88,0 x 46,0 | 9,0 | A | B

mm: 104,2 x 46,0 | 10,0 | A | B

G1054 | G1805 |

| BRAND MARCA | MODEL MODELO | C.C. | YEAR | FRONT | REAR |
|---|---|---|---|---|---|
| **CAGIVA** | | | | | |
| | CANYON | 600 | 95- | FD129 | FD117 |
| **YAMAHA** | | | | | |
| | XT 600 E | 600 | 90-94 | FD129 | FD079 |
| | XT 600 E | 600 | 95- | FD129 | FD079 |
| | XTZ 660 TENERE | 660 | 93-98 | FD129 | FD079 |

## FD 132

mm: 87,2 x 52,9 | 7,5 | A | A

G1054 |

| BRAND MARCA | MODEL MODELO | C.C. | YEAR | FRONT | REAR |
|---|---|---|---|---|---|
| **APRILIA** | | | | | |
| | PEGASO 650 | 650 | 91-93 | FD132 | FD135 |

## FD 133

mm: 76,8 x 41,8 | 7,4 | A | A

G1054 | G1805 | G1380 |

| BRAND MARCA | MODEL MODELO | C.C. | YEAR | FRONT | REAR |
|---|---|---|---|---|---|
| **APRILIA** | | | | | |
| | PEGASO 600 AE | 600 | 91- | FD133 | FD135 |

## FD 134

mm: 86,0 x 36,7 | 9,0 | A | A[1]

G1054 | G1371 |

| BRAND MARCA | MODEL MODELO | C.C. | YEAR | FRONT | REAR |
|---|---|---|---|---|---|
| **HONDA** | | | | | |
| | CB 300 R ABS | 300 | 10- | FD344 | FD134 |
| | CB 400 SB | 400 | 05- | FD219 | FD134 |
| | CB 400 SUPER BOL D'OR | 400 | 05- | FD219 | FD134 |
| | CB 400 SUPER FOUR | 400 | 05- | FD219 | FD134 |
| | CBR 400 RR | 400 | 98- | FD266 | FD134 |
| | CBF 500 ABS | 500 | 04- | FD344 | FD134 |
| | CBF 500 N | 500 | 04- | FD140 | FD134 |
| | 599 (USA) | 600 | 00-06 | FD266 | FD134 |
| | 599 (USA) ABS | 600 | 07- | FD344 | FD134 |
| | CB 600 HORNET | 600 | 98-99 | FD266 | FD134 |
| | CB 600 HORNET /S | 600 | 00-06 | FD266 | FD134 |
| | CB 600 HORNET ABS | 600 | 07- | FD344 | FD134 |
| | CBF 600 /S | 600 | 04-07 | FD266 | FD134 |
| | CBF 600 /S | 600 | 08- | FD266 | FD134 |
| | CBF 600 S ABS | 600 | 08- | FD344 | FD134 |
| | CBR 600 F2 | 600 | 91-94 | FD096 | FD134 |
| | CBR 600 F3 | 600 | 95-98 | FD266 | FD134 |
| | CBR 600 F4 | 600 | 99-00 | FD219 | FD134 |
| | CBR 600 F4 i SPORT | 600 | 01-10 | FD219 | FD134 |
| | CBR 600 RR | 600 | 03-04 | FD219 | FD134 |
| | CBR 600 RR | 600 | 05-06 | FD326 | FD134 |
| | INTEGRA | 700 | 12- | FD344 | FD134 |
| | NC 700 S | 700 | 12- | FD266 | FD134 |
| | NC 700 S ABS | 700 | 12- | FD344 | FD134 |
| | NC 700 X | 700 | 12- | FD266 | FD134 |
| | NC 700 X ABS | 700 | 12- | FD344 | FD134 |
| | XL 700 V TRANSALP DER. ABS | 700 | 08- | FD344 | FD134 |
| | CB 750 SEVEN FIFTY | 750 | 92- | FD266 | FD134 |
| | INTEGRA | 750 | 14- | FD266 | FD134 |
| | NC 750 S | 750 | 14- | FD266 | FD134 |
| | NC 750 S ABS | 750 | 14- | FD266 | FD134 |
| | NC 750 X | 750 | 14- | FD266 | FD134 |
| | NC 750 X ABS | 750 | 14- | FD266 | FD134 |
| | NM4-VULTUS | 750 | 15- | FD266 | FD134 |
| | 919 (USA) | 900 | 01- | FD148 | FD134 |
| | CB 900 SF HORNET | 900 | 01- | FD148 | FD134 |
| | CBR 900 RR | 900 | 92-92 | FD148 | FD134 |
| | CBR 900 RR | 900 | 93-97 | FD148 | FD134 |
| | CBR 900 RR | 900 | 98-99 | FD219 | FD134 |
| | CBR 900 RR (929) | 929 | 00-01 | FD219 | FD134 |
| | CBR 900 RR (954) | 954 | 02- | FD219 | FD134 |
| | CB 1000 BIG ONE | 1000 | 93- | FD148 | FD134 |
| | CBF 1000 | 1000 | 06- | FD266 | FD134 |
| | CBF 1000 ABS | 1000 | 06- | FD344 | FD134 |
| | CBR 1000 RR FIREBLADE | 1000 | 04-05 | FD326 | FD134 |
| | VTR 1000 F FIRESTORM | 1000 | 97-99 | FD148 | FD134 |
| | VTR 1000 F SUPER HAWK 996 (USA) | 1000 | 97-99 | FD148 | FD134 |
| | VTR 1000 SP-1 | 1000 | 00-01 | FD219 | FD134 |
| | VTR 1000 SP-2 | 1000 | 02- | FD219 | FD134 |
| | RVT 1000 RC 51 (USA) | 1000 | 02- | FD219 | FD134 |
| | CB 1100 | 1100 | 10-12 | FD219 | FD134 |
| | CB 1100 | 1100 | 13- | FD344 | FD134 |
| | CB 1100 EX | 1100 | 15- | FD219 | FD134 |
| | VT 1100 C2 ACE | 1100 | 97- | FD140 | FD134 |
| | CB 1300 | 1300 | 92-97 | FD148 | FD134 |
| | CB 1300 | 1300 | 03-04 | FD219 | FD134 |
| | CB 1300 F | 1300 | 10- | FD344 | FD134 |
| | CB 1300 S | 1300 | 05-09 | FD219 | FD134 |
| | CB 1300 S | 1300 | 10- | FD344 | FD134 |
| | CB 1300 SUPER BOL D'OR / ABS | 1300 | 05- | FD219 | FD134 |
| | CB 1300 SUPER FOUR / ABS | 1300 | 05- | FD219 | FD134 |
| | VT 1300 CS | 1300 | 10- | FD140 | FD134 |
| | VT 1300 CX | 1300 | 10- | FD140 | FD134 |
| | VTX 1300 S/C RETRO | 1300 | 03- | FD266 | FD134 |
| **HONDA BRAZIL** | | | | | |
| | CB 300 R ABS | 300 | 10- | FD344 | FD134 |
| **KAWASAKI** | | | | | |
| | Z 750 | 750 | 07- | FD266 | FD134 |
| | Z 750 ABS | 750 | 07- | FD266 | FD134 |
| | KLV 1000 RIGHT/DER | 1000 | 04- | FD179 | FD134 |
| | Z 1000 | 1000 | 07-08 | FD371 | FD134 |
| | Z 1000 | 1000 | 08-09 | FD371 | FD134 |
| **PEUGEOT** | | | | | |
| | SV 250 | 250 | 03- | FD207 | FD134 |
| **SUZUKI** | | | | | |
| | DL 650 V-STORM IZQ. | 650 | 04-06 | FD174 | FD134 |
| | DL 650 V-STORM IZQ. | 650 | 07- | FD174 | FD134 |
| | DL 650 V-STORM IZQ./ABS | 650 | 07- | FD174 | FD134 |
| | DL 650 V-STORM XPEDITION IZQ. | 650 | 11- | FD174 | FD134 |
| | DL 650 V-STORM XPEDITION IZQ./ABS | 650 | 11-12 | FD174 | FD134 |
| | DL 650 V-STORM XPEDITION IZQ./ABS | 650 | 13-13 | FD174 | FD134 |
| | DL 650 V-STORM XT IZQ./ABS | 650 | 15- | FD174 | FD134 |
| | GSF 650 BANDIT /S/ ABS IZQ. | 650 | 06- | FD174 | FD134 |
| | GSF 650 BANDIT /S/ | 650 | 07- | FD107 | FD134 |
| | GSF 650 BANDIT /S/ ABS | 650 | 07- | FD107 | FD134 |
| | GSX 650 F | 650 | 08- | FD107 | FD134 |
| | SV 650 /S IZQ. | 650 | 03-03 | FD174 | FD134 |
| | SV 650 /S IZQ. | 650 | 04-06 | FD174 | FD134 |
| | SV 650 ABS IZQ. | 650 | 07- | FD174 | FD134 |
| | GSR 750 RIGHT/DER | 750 | 11- | FD179 | FD134 |
| | GSR 750 ABS RIGHT/DER | 750 | 11- | FD179 | FD134 |
| | DL 1000 V-STORM IZQ. | 1000 | 01-13 | FD174 | FD134 |
| | GSX-S 1000 ABS | 1000 | 15- | FD373 | FD134 |
| | GSX-S 1000 F ABS | 1000 | 15- | FD373 | FD134 |
| | SV 1000 | 1000 | 03- | FD107 | FD134 |
| | SV 1000 / S / SZ | 1000 | 03- | FD107 | FD134 |
| | GSF 1200 BANDIT / S | 1200 | 06- | FD107 | FD134 |
| | GSF 1200 BANDIT ABS | 1200 | 06- | FD107 | FD134 |
| | GSF 1250 BANDIT A/S/SA | 1250 | 07-08 | FD107 | FD134 |
| | GSF 1250 BANDIT FA | 1250 | 09- | FD107 | FD134 |
| | GSF 1250 BANDIT /SA | 1250 | 10- | FD107 | FD134 |
| **YAMAHA** | | | | | |
| | FZ 6 FAZER | 600 | 04-06 | FD169 | FD134 |
| | FZ 6 S FAZER | 600 | 04-06 | FD169 | FD134 |
| | FZ 6 /S FAZER ABS | 600 | 06-06 | FD169 | FD134 |
| | FZ 6 S2 | 600 | 07- | FD178 | FD134 |
| | FZ 6 FAZER S2 | 600 | 07- | FD178 | FD134 |
| | FZ 6 S2 ABS | 600 | 07- | FD178 | FD134 |
| | FZ 6 FAZER S2 ABS | 600 | 07- | FD178 | FD134 |
| | YZF 600 R-6 | 600 | 03-04 | FD178 | FD134 |
| | YZF 600 R-6 | 600 | 05-05 | FD178 | FD134 |
| | YZF 600 R-6 | 600 | 06-07 | FD178 | FD134 |
| | YZF 600 R-6 | 600 | 08- | FD178 | FD134 |
| | YZF 600 R-46 | 600 | 05- | FD178 | FD134 |
| | MT 07 | 700 | 14- | FD178 | FD134 |
| | MT 07 ABS | 700 | 14- | FD178 | FD134 |
| | MT 07 MOTOCAGE | 700 | 15- | FD178 | FD134 |
| | MT 07 MOTOCAGE ABS | 700 | 15- | FD178 | FD134 |
| | FAZER 8 | 800 | 10- | FD178 | FD134 |
| | FZ 8 | 800 | 10- | FD178 | FD134 |
| | MT 09 | 850 | 13- | FD178 | FD134 |
| | MT 09 ABS | 850 | 13- | FD178 | FD134 |
| | MT 09 SPORTS TRACKER ABS | 850 | 14- | FD178 | FD134 |
| | MT 09 STREET RALLY | 850 | 14- | FD178 | FD134 |
| | MT 09 TRACER ABS | 850 | 15- | FD178 | FD134 |
| | FZ 1 / FAZER | 1000 | 06- | FD178 | FD134 |
| | YZF 1.000 R-1 | 1000 | 04-05 | FD178 | FD134 |
| | YZF 1.000 R-1 | 1000 | 06-06 | FD178 | FD134 |
| | YZF 1.000 R-1 SP | 1000 | 06-06 | FD178 | FD134 |
| | YZF 1.000 R-1 | 1000 | 07-08 | FD365 | FD134 |
| | YZF 1.000 R-1 | 1000 | 09-11 | FD365 | FD134 |
| | YZF 1.000 R-1 TCS | 1000 | 12-14 | FD365 | FD134 |

## FD 135

mm: 56,3 x 34,7 | 10,5 | A | B

mm: 85,0 x 42,1 | 7,8 | A | B

G1054 |

| BRAND MARCA | MODEL MODELO | C.C. | YEAR | FRONT | REAR |
|---|---|---|---|---|---|
| **APRILIA** | | | | | |
| | PEGASO 600 AE | 600 | 91- | FD133 | FD135 |
| | TUAREG 600 WIND AE | 600 | 91- | FD089 | FD135 |
| | MOTO 6.5 | 650 | 95- | FD172 | FD135 |
| | PEGASO 650 | 650 | 91-93 | FD132 | FD135 |

## FD 137

mm: 57,7 x 53,3 | 8,8 | A | A

G1054 |

| BRAND MARCA | MODEL MODELO | C.C. | YEAR | FRONT | REAR |
|---|---|---|---|---|---|
| **BMW** | | | | | |
| | R 100 R | 1000 | 92-94 | FD137 | MF616 |

## FD 138

mm 94,0 x 36,7 | 7,6 | A | A[1]

G1054 | G1805 | G1370 | G1380 | G1396

| BRAND MARCA | MODEL MODELO | C.C. | YEAR | FRONT | REAR |
|---|---|---|---|---|---|
| **APRILIA** | | | | | |
| | SRV 850 | 850 | 12- | FD138 | FD277 |
| | RST FUTURA | 1000 | 01- | FD176 | FD138 |
| **CAGIVA** | | | | | |
| | ELEFANT 750 | 750 | 94- | FD138 | FD138 |
| | ELEFANT 900 | 900 | 94- | FD138 | FD138 |
| | ELEFANT 900 CATALITICA | 900 | 93-93 | FD138 | FD140 |
| **CCM** | | | | | |
| | 404 E | 404 | 03- | FD138 | FD165 |
| | 404 DS | 404 | 03- | FD138 | FD165 |
| | 604 E DS | 604 | 98-03 | FD138 | FD165 |
| | 604 E SUPER MOTARD | 604 | 98-03 | FD138 | FD165 |
| | 604 RS ROADSTER | 604 | 00-03 | FD138 | FD165 |
| | 644 DS | 644 | 04- | FD138 | FD165 |
| | 644 DS SUPER MOTARD | 644 | 04- | FD138 | FD165 |
| | R 30 | 644 | 02- | FD138 | FD165 |
| | FT 710 | 710 | 08- | FD138 | FD165 |
| **DUCATI** | | | | | |
| | MONSTER 620 / DARK | 620 | 05- | FD138 | FD220 |
| | MULTISTRADA MTS 620 | 620 | 05- | FD138 | FD012 |
| | MONSTER 695 | 695 | 06- | FD138 | FD012 |
| | MONSTER 800 S2R | 800 | 05- | FD138 | FD220 |
| **GILERA-PIAGGIO** | | | | | |
| | NEXUS i.e. | 250 | 06-06 | FD138 | FD220 |
| | NEXUS | 500 | 03-05 | FD138 | FD220 |
| | NEXUS i.e. SP | 500 | 06- | FD138 | FD220 |
| | GP 800 | 800 | 08- | FD138 | FD277 |
| **HIGHLAND** | | | | | |
| | 950 V2 OUTBACK | 950 | 00- | FD138 | FD165 |
| | 950 V2 MOTARD | 950 | 00- | FD138 | FD165 |
| **KEEWAY** | | | | | |
| | SILVER BLADE 150 | 150 | 07- | FD138 | FD220 |
| | SILVER BLADE 250 | 250 | 07- | FD138 | FD220 |
| **KTM** | | | | | |
| | 640 LC4 ADVENTURE R | 640 | 99-05 | FD138 | FD165 |
| | 640 LC4 ADVENTURE R | 640 | 06- | FD138 | FD165 |
| | 950 ADVENTURE S | 950 | 03- | FD172 | FD138 |
| | 950 R SUPER ENDURO | 950 | 06- | FD172 | FD138 |
| | 950 SUPERMOTO R | 950 | 07- | FD262 | FD138 |
| | SUPERMOTO 950 | 950 | 05- | FD262 | FD138 |
| | 990 ADVENTURE R | 990 | 09- | FD172 | FD138 |
| | 990 ADVENTURE / S | 990 | 06- | FD172 | FD138 |
| | 990 ADVENTURE / S ABS | 990 | 06- | FD172 | FD138 |
| | 990 R SUPER ENDURO | 990 | 06- | FD172 | FD138 |
| | 990 SM R | 990 | 09- | FD373 | FD138 |
| | 990 SM T | 990 | 09- | FD262 | FD138 |
| | 990 SM T ABS | 990 | 11- | FD262 | FD138 |
| | 990 SUPERMOTO / R | 990 | 08-09 | FD262 | FD138 |
| | 990 SUPERMOTO / R | 990 | 10- | FD373 | FD138 |
| | 1050 ADVENTURE | 1050 | 15- | FD176 | FD138 |
| | 1190 ADVENTURE | 1190 | 13- | FD176 | FD138 |
| | 1190 ADVENTURE R | 1190 | 13- | FD176 | FD138 |
| **MALAGUTI** | | | | | |
| | MADISON 180 | 180 | 02- | FD138 | FD220 |
| | MADISON 200 | 200 | 04- | FD138 | FD220 |
| **MBK MOTOBEKANE** | | | | | |
| | SKYLINER | 150 | 01- | FD138 | FD220 |
| | THUNDER | 150 | 01- | FD138 | FD220 |
| | SKYLINER | 180 | 03- | FD138 | FD220 |
| | KILIBRE | 300 | 03- | FD138 | FD138 |
| **MOTO GUZZI** | | | | | |
| | 940 CUSTOM | 940 | 07- | FD176 | FD138 |
| | BELLAGIO AQUILA NERA | 940 | 10- | FD138 | FD138 |
| | CALIFORNIA SPECIAL SPORT | 1000 | 03- | FD176 | FD138 |
| | CALIFORNIA STONE | 1000 | 03- | FD176 | FD138 |
| | BREVA 1100 | 1100 | 05- | FD176 | FD138 |
| | CALIFORNIA ESPECIAL | 1100 | 99- | FD068 | FD138 |
| | CALIFORNIA EV | 1100 | 97- | FD068 | FD138 |
| | CALIFORNIA JACKAL | 1100 | 99- | FD068 | FD138 |
| | STELVIO | 1150 | 08-10 | FD176 | FD138 |
| | STELVIO TT | 1150 | 09-10 | FD176 | FD138 |
| | SPORT 1200 | 1200 | 07-08 | FD176 | FD138 |
| | SPORT 1200 V4 | 1200 | 09- | FD176 | FD138 |
| | STELVIO | 1200 | 11- | FD176 | FD138 |
| | STELVIO NTX | 1200 | 11-11 | FD176 | FD138 |
| | STELVIO NTX | 1200 | 12- | FD262 | FD138 |
| | V 12 LE MANS | 1200 | 10- | FD373 | FD138 |
| | V 12 STRADA | 1200 | 10- | FD373 | FD138 |
| | V 12 X | 1200 | 10- | FD373 | FD138 |
| | AUDACE | 1400 | 15- | FD176 | FD138 |
| | CALIFORNIA CUSTOM | 1400 | 13- | FD176 | FD138 |
| | CALIFORNIA TOURING | 1400 | 13- | FD176 | FD138 |
| | EL DORADO | 1400 | 15- | FD176 | FD138 |
| **MOTO MORINI** | | | | | |
| | GRANFERRO | 1200 | 10- | FD373 | FD138 |
| | GRANPASSO | 1200 | 08- | FD172 | FD138 |
| | SCRAMBLER | 1200 | 09- | FD172 | FD138 |
| **PEUGEOT** | | | | | |
| | METROPOLIS 400i | 400 | 12- | FD138 | FD086 |
| **PIAGGIO** | | | | | |
| | BEVERLY 400 i.e. | 400 | 06- | FD138 | FD220 |
| | X 9 EVOLUTION | 500 | 03- | FD138 | FD220 |
| | X 9 i.e. | 500 | 07- | FD138 | FD220 |
| **SUZUKI** | | | | | |
| | UH 150 BURGMAN | 150 | 02- | FD138 | FD220 |
| **YAMAHA** | | | | | |
| | MAXTER 150 | 150 | 01- | FD138 | FD220 |
| | SP 150 MAGESTY | 150 | 01- | FD138 | FD220 |
| | SP 180 MAGESTY | 180 | 03- | FD138 | FD220 |
| | VERSITY | 300 | 03- | FD138 | FD138 |
| | XT 660 Z TENERE | 660 | 08- | FD138 | FD165 |

## FD 140

mm 102,1 x 38,7 | 9,8 | A | A[1]

G1054 | G1370

| BRAND MARCA | MODEL MODELO | C.C. | YEAR | FRONT | REAR |
|---|---|---|---|---|---|
| **BUELL** | | | | | |
| | BLAST | 500 | 00- | FD140 | FD103 |
| **CAGIVA** | | | | | |
| | ELEFANT 900 CATALITICA | 900 | 93-93 | FD138 | FD140 |
| **DAELIM** | | | | | |
| | ROADWIN 250 | 250 | 08-10 | FD140 | FD117 |
| | ROADWIN 250 R FI | 250 | 11- | FD140 | FD117 |
| | S2 250 FREEWAY | 250 | 06- | FD140 | FD117 |
| **HONDA** | | | | | |
| | VTR 250 | 250 | 98-08 | FD140 | FD103 |
| | VTR 250 i | 250 | 09- | FD140 | FD103 |
| | VTR 250 F | 250 | 13- | FD140 | FD103 |
| | FJS 400 SILVER WING | 400 | 06- | FD207 | FD140 |
| | SILVER WING 400 | 400 | 02-08 | FD207 | FD140 |
| | SILVER WING T 400 | 400 | 09- | FD344 | FD140 |
| | CBF 500 N | 500 | 04- | FD140 | FD134 |
| | FJS 600 SILVER WING | 600 | 01- | FD207 | FD140 |
| | FJS 600 SILVER WING ABS | 600 | 03- | FD207 | FD140 |
| | SW-T 600 | 600 | 11- | FD344 | FD140 |
| | XL 600 V TRANSALP | 600 | 94-96 | FD140 | FD103 |
| | DN - 01 | 680 | 08-09 | FD344 | FD140 |
| | DN - 01 CONCEPT | 680 | 10- | FD344 | FD140 |
| | CB 750 NIGHTHAWK | 750 | 91- | FD140 | MF |
| | VFR 750 F | 750 | 90-93 | FD266 | FD140 |
| | VFR 750 F | 750 | 94-97 | FD266 | FD140 |
| | VT 750 C SHADOW | 750 | 97- | FD140 | MF |
| | VT 750 C2 SHADOW BLACK | 750 | 10- | FD140 | MF |
| | VT 750 DC BLACK WIDOW | 750 | 02- | FD140 | MF |
| | VT 750 DC SPIRIT | 750 | 07- | FD140 | MF |
| | CB 1000 SF | 1000 | 93- | FD266 | FD140 |
| | ST 1100 PAN-EUROPEAN | 1100 | 91-95 | FD266 | FD140 |
| | VT 1100 C SHADOW | 1100 | 94-94 | FD140 | MF043 |
| | VT 1100 C2 ACE | 1100 | 97- | FD140 | FD134 |
| | VT 1100 C2 SHADOW ACE | 1100 | 95-96 | FD266 | FD140 |
| | VT 1200 MAGNA | 1200 | 95- | FD266 | FD140 |
| | VT 1300 CS | 1300 | 10- | FD140 | FD134 |
| | VT 1300 CX | 1300 | 10- | FD140 | FD134 |
| | F6C 1500 VALKYRIA | 1500 | 97- | FD266 | FD140 |
| **PEUGEOT** | | | | | |
| | GEO 400 RS | 400 | 10- | FD140 | FD187 |
| | SATELIS 400 | 400 | 07- | FD140 | FD220 |
| | SATELIS 400 ABS PBS | 400 | 07- | FD140 | FD220 |
| | SATELIS 500 ABS PBS | 500 | 07- | FD140 | FD220 |
| | SATELIS 500 | 500 | 07-09 | FD140 | FD220 |
| | SATELIS 500 | 500 | 10- | FD140 | FD187 |
| **SUZUKI** | | | | | |
| | GEMMA 250 (JAP) | 250 | 09- | FD140 | FD401 |
| | VL 1500 INTRUDER T | 1500 | 13- | FD140 | FD179 |
| **TRIUMPH** | | | | | |
| | STREET TRIPLE | 675 | 07- | FD140 | FD103 |
| | BONNEVILLE AMERICA | 750 | 02- | FD140 | FD140 |
| | SPEEDMASTER | 790 | 03- | FD140 | FD140 |
| | BONNEVILLE /T100 | 800 | 04-05 | FD140 | FD086 |
| | BONNEVILLE /T100 | 850 | 05-07 | FD140 | FD086 |
| | BONNEVILLE EFI /T100 | 800 | 08- | FD140 | FD086 |
| | BONNEVILLE SE | 850 | 09- | FD140 | FD086 |
| | BONEVILLE ACE | 865 | 15- | FD140 | FD086 |
| | BONEVILLE NEW CHURCH | 865 | 15- | FD140 | FD086 |
| | BONEVILLE SPIRIT | 865 | 15- | FD140 | FD086 |
| | SPEEDMASTER | 865 | 10- | FD140 | FD086 |
| | STEVE McQUEEN SE | 865 | 12- | FD140 | FD086 |
| | THRUXTON 865 | 865 | 04-07 | FD140 | FD086 |
| | THRUXTON 865 EFI | 865 | 08- | FD140 | FD086 |
| | THRUXTON 865 ACE | 865 | 15- | FD140 | FD086 |
| | ADVENTURER | 900 | 99- | FD140 | FD140 |
| | LEGEND TT | 900 | 99- | FD266 | FD140 |
| | SCRAMBLER | 900 | 06-07 | FD140 | FD086 |
| | SCRAMBLER EFI | 900 | 08- | FD140 | FD086 |
| | THUNDERBIRD 900/SPORT | 900 | 95- | FD266 | FD140 |
| | TIGER 955 | 955 | 99- | FD140 | FD117 |
| **VICTORY** | | | | | |
| | CORY NESS CROOS COUNTRY | 1500 | 11- | FD331 | FD140 |
| | CROSS COUNTRY | 1500 | 10- | FD331 | FD140 |
| | CROSS ROADS | 1500 | 10- | FD331 | FD140 |
| | HAMMER / S | 1500 | 08- | FD331 | FD140 |
| | JACKPOT | 1500 | 10- | FD331 | FD140 |
| | KING PIN | 1500 | 08- | FD331 | FD140 |
| | VEGAS | 1500 | 08- | FD331 | FD140 |
| | VISION 8 BALL | 1500 | 10- | FD205 | FD140 |
| **YAMAHA** | | | | | |
| | X - CITY | 250 | 07- | FD140 | FD214 |
| | MT 01 | 1650 | 05-06 | FD178 | FD140 |
| | MT 01 | 1650 | 07- | FD365 | FD140 |

## FD 141

mm 58,9 x 43,6 | 7,9 | A | A

G1054

| BRAND MARCA | MODEL MODELO | C.C. | YEAR | FRONT | REAR |
|---|---|---|---|---|---|
| **KAWASAKI** | | | | | |
| | ZXR 400 | 400 | 90-94 | FD141 | FD111 |
| | ZZR 400 | 400 | 90- | FD141 | FD090 |

## FD 142

mm 102,2 x 40,0 | 10,0 | A | A

G1054 | G1370 | G1380

| BRAND MARCA | MODEL MODELO | C.C. | YEAR | FRONT | REAR |
|---|---|---|---|---|---|
| **MBK MOTOBEKANE** | | | | | |
| | SKYLINER | 400 | 04- | FD142 | FD352 |
| **YAMAHA** | | | | | |
| | SP 400 MAGESTY | 400 | 04-04 | FD142 | FD352 |
| | SR 400 | 400 | 14- | FD142 | MF |



For other models years previous to 1990 visit **www.galferonline.es** - Para otros modelos anteriores al año 1990 visitar **www.galferonline.es**
For consult TÜV (ABE) type approvals visit **www.galfermoto.com --> DOWNALOAD --> TÜV CERTIFICATIONS** - Para consultar las homologaciones TÜV (ABE) visitar **www.galfermoto.com --> DESCARGAS --> CERTIFICACIONES TÜV**

| | | | | |
|---|---|---|---|---|
| XP 500 T-MAX | 500 | 00-03 | FD142 | FD260 |
| XV 535 S VIRAGO | 535 | 95- | FD142 | MF459 |
| XJ 600 N / S | 600 | 95-97 | FD142 | FD069 |
| XJ 600 S DIVERSION | 600 | 91-97 | FD142 | FD069 |
| XJ 600 SECA II | 600 | 92-93 | FD142 | FD069 |
| XVS 650 DRAG STAR | 650 | 97- | FD142 | MF459 |
| XVS 650 STAR CLASSIC | 650 | 97- | FD142 | MF459 |
| XVS 650 STAR SILVERADO | 650 | 97- | FD142 | MF459 |
| XV 750 | 750 | 95- | FD142 | MF477 |
| XJ 900 S DIVERSION | 900 | 95- | FD142 | FD057 |
| XVS 950 A MIDNIGHT STAR | 950 | 09- | FD142 | FD352 |
| XVS 950 | 950 | 13- | FD142 | FD352 |
| XVS 950 R | 950 | 13- | FD142 | FD352 |
| XVS 950 BOLT (USA) | 950 | 13- | FD142 | FD352 |
| XV 1100 VIRAGO | 1100 | 95-98 | FD142 | MF459 |
| XZV 1.300 TF ROYAL STAR VENTURE | 1300 | 99- | FD142 | FD087 |
| XV 1600 WILD STAR | 1600 | 99- | FD142 | FD087 |

## FD 143

mm 74,3 x 53,7 | 9,2 | A | A

G1054 | G1370

| BRAND MARCA | MODEL MODELO | C.C. | YEAR | FRONT | REAR |
|---|---|---|---|---|---|
| **YAMAHA** | | | | | |
| FZR 1000 EXUP | | 1000 | 93-95 | FD143 | FD057 |

## FD 145

mm 77,4 x 42,3 | 9,2 | A | B

mm 98,8 x 42,3 | 9,2 | A | B

G1054 | G1380

| BRAND MARCA | MODEL MODELO | C.C. | YEAR | FRONT | REAR |
|---|---|---|---|---|---|
| **BENELLI** | | | | | |
| CAFFE NERO IZQ. | | 250 | 08- | FD145 | |
| **CAGIVA** | | | | | |
| ELEFANT 900 i.e. | | 900 | 91-92 | FD082 | FD145 |
| **CFMOTO** | | | | | |
| JET MAX DER/RIGHT | | 250 | 10- | FD145 | |
| **DAELIM** | | | | | |
| S3 250 Fi ADVANCE | | 250 | 12- | FD275 | FD145 |
| **HONDA** | | | | | |
| CBF 250 | | 250 | 04- | FD145 | MF051 |
| CB 300 R | | 300 | 09- | FD145 | MF |
| **HONDA BRAZIL** | | | | | |
| CBF 250 | | 250 | 04- | FD145 | MF051 |
| CB 300 R | | 300 | 09- | FD145 | MF |
| **KAWASAKI** | | | | | |
| KLR 650 | | 650 | 08- | FD086 | FD145 |
| **KYMCO** | | | | | |
| BET & WIN 150 | | 150 | 00- | FD145 | FD145 |
| DINK 150 | | 150 | 97- | FD145 | FD145 |
| HIPSER 150 | | 150 | 00- | FD145 | MF |
| JETIX | | 150 | 10- | FD073 | FD145 |
| MINI BIKE 150 | | 150 | 14- | FD145 | MF |
| NSR 150 | | 150 | 94- | FD145 | FD145 |
| QUANNON 150 | | 150 | 10- | FD145 | FD145 |
| STRAIGHT 150 | | 150 | 05- | FD145 | FD145 |
| LIKE | | 200 | 09- | FD187 | FD145 |
| YAGER GT 200 i | | 200 | 09- | FD145 | FD145 |
| BET & WIN 250 | | 250 | 00- | FD145 | FD145 |
| GRAND DINK 250 | | 250 | 01-01 | FD145 | FD145 |
| PEOPLE | | 250 | 02-04 | FD145 | MF |
| PEOPLE | | 250 | 05- | FD145 | FD474 |
| PEOPLE S DER./RIGHT | | 250 | 06- | FD145 | |
| SUPER 9 | | 250 | 00- | FD145 | FD261 |

| | | | | |
|---|---|---|---|---|
| YUP 250 | 250 | 02- | FD145 | FD145 |
| PEOPLE 300 RIGHT/DER. | 300 | 08- | FD145 | |
| **P.G.O.** | | | | |
| G-MAX | 150 | 05- | FD068 | FD145 |
| G-MAX | 250 | 06- | FD068 | FD145 |
| **SUZUKI** | | | | |
| AN 250 BURGMAN / SKY WAVE DER. | 250 | 07-08 | FD145 | |
| AN 400 BURGMAN DER./RIGHT | 400 | 06- | FD145 | FD401 |
| AN 400 SKY WAVE DER./RIGHT | 400 | 07- | FD145 | FD401 |
| **SYM** | | | | |
| RS 150 | 150 | 06- | FD412 | FD145 |

## FD 148

mm 68,0 x 53,6 | 8,5 | A | A

G1054 | G1370 | G1375

| BRAND MARCA | MODEL MODELO | C.C. | YEAR | FRONT | REAR |
|---|---|---|---|---|---|
| **HONDA** | | | | | |
| CB 250 HORNET | | 250 | 96- | FD148 | FD103 |
| RVF 750 RR (RC45) | | 750 | 94- | FD148 | FD110 |
| 919 (USA) | | 900 | 01- | FD148 | FD134 |
| CB 900 SF HORNET | | 900 | 01- | FD148 | FD134 |
| CBR 900 RR | | 900 | 92-92 | FD148 | FD134 |
| CBR 900 RR | | 900 | 93-97 | FD148 | FD134 |
| CB 1000 BIG ONE | | 1000 | 93- | FD148 | FD134 |
| VTR 1000 F FIRESTORM | | 1000 | 97-99 | FD148 | FD134 |
| VTR 1000 F SUPER HAWK 996 (USA) | | 1000 | 97-99 | FD148 | FD134 |
| CB 1300 | | 1300 | 92-97 | FD148 | FD134 |
| X-4 LOW DOWN | | 1300 | 00- | FD148 | FD267 |

## FD 152

mm 31,8 x 51,2 | 5,5 | A | A

G1054

| BRAND MARCA | MODEL MODELO | C.C. | YEAR | FRONT | REAR |
|---|---|---|---|---|---|
| **PIAGGIO** | | | | | |
| SKIPPER | | 150 | 93-97 | FD152 | MF636 |

## FD 153

mm 39,7 x 49,5 | 6,5 | A | A

G1054 | G1380

| BRAND MARCA | MODEL MODELO | C.C. | YEAR | FRONT | REAR |
|---|---|---|---|---|---|
| **APRILIA** | | | | | |
| LEONARDO 150 4T | | 150 | 98-98 | FD153 | FD153 |
| RS 250 | | 250 | 95-97 | FD068 | FD153 |
| RS 250 | | 250 | 98- | FD176 | FD153 |
| **BENELLI** | | | | | |
| ADIVA | | 150 | 00- | FD153 | FD263 |
| VELVET 150 | | 150 | 98- | FD153 | FD153 |
| **BETA** | | | | | |
| EIKON 150 4T | | 150 | 99- | FD153 | FD228 |
| **CPI** | | | | | |
| GTR 150 | | 150 | 03- | FD162 | FD153 |
| GTS 150 | | 150 | 03- | FD162 | FD153 |
| GTR 200 | | 200 | 03- | FD162 | FD153 |
| GTS 200 | | 200 | 03- | FD162 | FD153 |
| **HYOSUNG** | | | | | |
| EXCEED 150 | | 150 | 03- | FD153 | FD117 |
| GD 250 N | | 250 | 14- | FD176 | FD153 |
| GD 250 R | | 250 | 14- | FD176 | FD153 |
| **MALAGUTI** | | | | | |
| CIAK | | 150 | 03- | FD153 | FD153 |
| F 18 WARRIOR | | 150 | 00-03 | FD153 | FD228 |

| | | | | |
|---|---|---|---|---|
| **MBK MOTOBEKANE** | | | | |
| DOODO | 150 | 01- | FD153 | MF640 |
| **PIAGGIO** | | | | |
| HEXAGON | 150 | 94-99 | FD153 | MF636 |
| **RENAULT** | | | | |
| FULLTIME | 150 | 02- | FD153 | FD200 |
| KOURANOS | 250 | 02- | FD153 | FD200 |
| **YAMAHA** | | | | |
| TEO´S 150 | 150 | 01- | FD153 | MF640 |

## FD 154

mm 131,9 x 82,2 | 9,5 | A | A

G1054

| BRAND MARCA | MODEL MODELO | C.C. | YEAR | FRONT | REAR |
|---|---|---|---|---|---|
| **YAMAHA** | | | | | |
| GTS 1000 OMEGA | | 1000 | 93- | FD154 | FD057 |

## FD 155

mm 125,5 x 45,0 | 8,8 | A | A[1]

G1054

| BRAND MARCA | MODEL MODELO | C.C. | YEAR | FRONT | REAR |
|---|---|---|---|---|---|
| **HONDA** | | | | | |
| CBR 1000 F DUAL | | 1000 | 93-99 | FD155 | FD155 |

## FD 156

mm 90,0 x 55,7 | 8,0 | A | A

G1054 | G1370 | G1375 | G1003 | G1300

| BRAND MARCA | MODEL MODELO | C.C. | YEAR | FRONT | REAR |
|---|---|---|---|---|---|
| **KAWASAKI** | | | | | |
| ZXR 400 | | 400 | 99- | FD156 | FD167 |
| ZX-6R | | 600 | 98-99 | FD156 | FD167 |
| ZX-6R | | 600 | 00-02 | FD156 | FD167 |
| ZX-6R 636 | | 636 | 02-02 | FD156 | FD167 |
| ZX-9R NINJA | | 900 | 96-97 | FD156 | FD167 |
| ZX-9R NINJA | | 900 | 98-99 | FD156 | FD167 |
| ZX-9R NINJA | | 900 | 00-01 | FD156 | FD167 |
| ZRX 1100 | | 1100 | 97-00 | FD156 | FD111 |
| ZRX 1200 | | 1200 | 04- | FD156 | FD111 |
| ZRX 1200 S | | 1200 | 02-03 | FD156 | FD111 |
| ZRX 1200 S | | 1200 | 04- | FD156 | FD111 |
| ZRX 1200 R | | 1200 | 04- | FD156 | FD111 |
| ZX-12 R | | 1200 | 00-03 | FD156 | FD111 |
| VN 1500 MEAN STREAK | | 1500 | 01- | FD156 | FD179 |
| VN 1600 MEAN STREAK | | 1600 | 04-04 | FD156 | FD179 |
| **SUZUKI** | | | | | |
| GSX R 750 W | | 750 | 94-95 | FD156 | FD111 |
| GSX R 750 SRAD | | 750 | 96-99 | FD156 | FD111 |
| GSX R 1000 | | 1000 | 01-02 | FD156 | FD267 |
| TL 1000 R | | 1000 | 98- | FD156 | FD111 |
| GSX 1100 KATANA | | 1100 | 02- | FD156 | FD267 |
| GSX R 1100 W | | 1100 | 93- | FD156 | FD111 |
| GS 1200 SS | | 1200 | 01- | FD156 | FD267 |
| GSF 1200 BANDIT / S | | 1200 | 00-05 | FD156 | FD111 |
| GSX 1300 R HAYABUSA | | 1300 | 99-07 | FD156 | FD111 |
| GSX 1400 | | 1400 | 01- | FD156 | FD267 |
| VZ 1600 | | 1600 | 04- | FD156 | FD179 |

## FD 157

mm: 98,8 x 53,5 | 10,0 | A | A

G1054

| BRAND MARCA | MODEL MODELO | C.C. | YEAR | FRONT | REAR |
|---|---|---|---|---|---|
| **YAMAHA** | | | | | |
| | YZF 750 R, SP | 750 | 93-95 | FD157 | FD057 |

## FD 160

mm: 33,5 x 51,3 | 7,0 | A (6x)

G1054

| BRAND MARCA | MODEL MODELO | C.C. | YEAR | FRONT | REAR |
|---|---|---|---|---|---|
| **ISR** | | | | | |
| | 6 PISTON RACING CALIPER | | 93- | FD160 | FD |

## FD 161

mm: 30,6 x 46,6 | 7,0 | A (6x)

G1054

| BRAND MARCA | MODEL MODELO | C.C. | YEAR | FRONT | REAR |
|---|---|---|---|---|---|
| **ISR** | | | | | |
| | 6 PISTON RACING CALIPER | | 93- | FD161 | FD |

## FD 162

mm: 76,8 x 41,8 | 7,5 | A | B

mm: 94,5 x 42,0 | 7,5 | A | B

G1054 | G1380

| BRAND MARCA | MODEL MODELO | C.C. | YEAR | FRONT | REAR |
|---|---|---|---|---|---|
| **APRILIA** | | | | | |
| | PEGASO 650 | 650 | 94-97 | FD162 | FD171 |
| **BENELLI** | | | | | |
| | VELVET 250 | 250 | 99- | FD162 | FD228 |
| | VELVET DUSK 400 | 400 | 03- | FD162 | FD228 |
| **BETA** | | | | | |
| | URBAN 200 | 200 | 08- | FD162 | FD456 |
| | ALP 4.0 | 350 | 03-07 | FD162 | FD075 |
| | ALP 4.0 | 350 | 08- | FD162 | FD456 |
| **CPI** | | | | | |
| | GTR 150 | 150 | 03- | FD162 | FD153 |
| | GTS 150 | 150 | 03- | FD162 | FD153 |
| | GTR 200 | 200 | 03- | FD162 | FD153 |
| | GTS 200 | 200 | 03- | FD162 | FD153 |
| **GAS GAS** | | | | | |
| | 250 PAMPERA | 250 | 03- | FD162 | FD225 |
| **GILERA-PIAGGIO** | | | | | |
| | DNA 180 (G) | 180 | 01- | FD162 | FD263 |
| | MAD-MUD (G) | 180 | 02- | FD162 | FD263 |
| | RUNNER 180 FXR (G) | 180 | 98-98 | FD162 | MF |
| | RUNNER 180 SP | 180 | 99-00 | FD162 | FD200 |
| | RUNNER 180 VXR (G) | 180 | 01- | FD162 | FD263 |
| | RUNNER 200 VXR | 200 | 02-05 | FD162 | FD263 |
| **MALAGUTI** | | | | | |
| | MADISON 150 | 150 | 00- | FD162 | FD228 |
| | PHANTOM MAX 200 | 200 | 04- | FD162 | FD220 |
| | MADISON 3 250 i.e. | 250 | 07- | FD162 | FD220 |
| | PASSWORD 250 | 250 | 07- | FD162 | FD228 |
| | PHANTOM MAX 250 | 250 | 05- | FD162 | FD228 |
| **PEUGEOT** | | | | | |
| | ELYSEO 150 | 150 | 01- | FD162 | FD270 |
| **PIAGGIO** | | | | | |
| | HEXAGON GTX 150 (G) | 150 | 00- | FD162 | FD263 |
| | SKIPPER LX (G) | 150 | 98-99 | FD162 | MF |
| | SKR 150 ST 4T (G) | 150 | 00- | FD162 | MF |
| | HEXAGON GTX 180 (G) | 180 | 00-00 | FD162 | FD263 |
| | HEXAGON LXT 180 (G) | 180 | 98-99 | FD162 | MF |
| | SUPER HEXAGON GTX 180 (G) | 180 | 01- | FD162 | FD263 |
| | BEVERLY 200 4T (G) | 200 | 02- | FD162 | FD162 |
| | VESPA GRAN TURISMO (G) | 200 | 03- | FD162 | FD263 |
| | HEXAGON GT 250 4-T (G) | 250 | 98-99 | FD162 | MF451 |
| | HEXAGON GTX 250 (G) | 250 | 00- | FD162 | FD263 |
| **SUMCO** | | | | | |
| | KIRA KR 200 TR | 200 | 06- | FD162 | FD065 |
| | 200 KR | 200 | 05- | FD162 | FD065 |

## FD 163

mm: 48,0 x 45,5 | 7,1 | A | A

G1054 | G1805

| BRAND MARCA | MODEL MODELO | C.C. | YEAR | FRONT | REAR |
|---|---|---|---|---|---|
| **HONDA** | | | | | |
| | NSR 250 R | 250 | 93- | FD068 | FD163 |
| | TSR 250 | 250 | 98- | FD168 | FD163 |
| | VTR 1000 SP-1 KIT | 1000 | 00-01 | FD168 | FD163 |
| **YAMAHA** | | | | | |
| | TZ 250 | 250 | 90- | FD099 | FD163 |
| | YZF-R7/OW02 RACE | 750 | 99- | FD193 | FD163 |

## FD 164

mm: 94,2 x 33,7 | 7,5 | A | A[1]

G1054 | G1805 | G1396

| BRAND MARCA | MODEL MODELO | C.C. | YEAR | FRONT | REAR |
|---|---|---|---|---|---|
| **HONDA** | | | | | |
| | XR 230 | 230 | 05- | FD164 | FD093 |
| | CRF 250 L | 250 | 12- | FD164 | FD093 |
| | NX 250 DOMINATOR | 250 | 97- | FD164 | MF |
| | XRE 300 | 300 | 09- | FD164 | FD093 |
| | NX 4 DOMINATOR | 400 | 99-02 | FD164 | FD093 |
| | NX 4 FALCON | 400 | 03- | FD164 | FD093 |
| | XL 600 V TRANSALP IZQ. | 600 | 97-99 | FD164 | |
| | XL 600 V TRANSALP DER. | 600 | 97-99 | FD164 | FD103 |
| | XL 650 V TRANSALP IZQ. | 650 | 00- | FD164 | |
| | XL 650 V TRANSALP DER. | 650 | 00- | FD164 | FD103 |
| | XR 650 L | 650 | 93- | FD164 | FD093 |
| | XL 700 V TRANSALP IZQ. | 700 | 08- | FD164 | |
| | XL 700 V TRANSALP DER. | 700 | 08- | FD164 | FD103 |
| | XRV 750 AFRICA TWIN | 750 | 94- | FD164 | FD103 |
| **HONDA BRAZIL** | | | | | |
| | NXR 150 BROS | 150 | 12- | FD164 | MF |
| | XRE 300 | 300 | 09- | FD164 | FD093 |
| **HONDA MALASIA** | | | | | |
| | CRF 250 L | 250 | 12- | FD164 | FD093 |
| **YAMAHA** | | | | | |
| | WR 250 R | 250 | 08- | FD164 | FD286 |

## FD 165

mm: 78,0 x 40,8 | 9,0 | A | A[1]

G1054 | G1805 | G1371 | G1396

| BRAND MARCA | MODEL MODELO | C.C. | YEAR | FRONT | REAR |
|---|---|---|---|---|---|
| **APRILIA** | | | | | |
| | PEGASO 650 ie | 650 | 01-06 | FD172 | FD165 |
| | PEGASO 650 ie | 650 | 07- | FD176 | FD165 |
| | PEGASO 650 ie FACTORY | 650 | 06-08 | | FD165 |
| | PEGASO 650 STRADA | 650 | 05- | FD176 | FD165 |
| | DORSODURO | 750 | 08- | FD367 | FD165 |
| | DORSODURO FACTORY | 750 | 10- | FD367 | FD165 |
| | SHIVER | 750 | 07- | FD367 | FD165 |
| | SHIVER SL GT / ABS | 750 | 09- | FD367 | FD165 |
| | MANA | 850 | 07- | FD367 | FD165 |
| | MANA GT / ABS | 850 | 09- | FD367 | FD165 |
| | PEGASO 1000 | 1000 | 01- | FD172 | FD165 |
| | CAPONORD 1200 | 1200 | 13- | FD475 | FD165 |
| | DORSODURO 1200 | 1200 | 11- | FD176 | FD165 |
| **BENELLI** | | | | | |
| | 570 SUPERMOTO | 570 | 08- | FD262 | FD165 |
| **BETA** | | | | | |
| | EURO | 350 | 00- | FD068 | FD165 |
| | JONATHAN | 350 | 03- | FD068 | FD165 |
| **BMW** | | | | | |
| | C1 200 | 200 | 01- | FD172 | FD165 |
| | F 650 | 650 | 93- | FD172 | FD165 |
| | F 650 CS SCARVER | 650 | 01- | FD172 | FD165 |
| | F 650 DAKAR | 650 | 00-01 | FD172 | FD165 |
| | F 650 GS | 650 | 00- | FD172 | FD165 |
| | F 650 GS BICILINDRICO | 650 | 07- | FD172 | FD165 |
| | F 650 ST | 650 | 97- | FD172 | FD165 |
| | G 650 GS | 650 | 09- | FD172 | FD165 |
| | G 650 XCHALLENGE | 650 | 07- | FD172 | FD165 |
| | G 650 XCOUNTRY | 650 | 07- | FD172 | FD165 |
| | G 650 XMOTO | 650 | 07- | FD176 | FD165 |
| | F 700 GS | 700 | 13- | FD172 | FD165 |
| | F 800 GS | 800 | 08- | FD172 | FD165 |
| | F 800 GT | 800 | 13- | FD176 | FD165 |
| | F 800 R | 800 | 09-14 | FD176 | FD165 |
| | F 800 R | 800 | 15- | FD475 | FD165 |
| | F 800 S | 800 | 06- | FD176 | FD165 |
| | F 800 ST | 800 | 06- | FD176 | FD165 |
| | HP 4 | 1000 | 12- | FD373 | FD165 |
| | S 1000 R NAKED | 1000 | 14- | FD437 | FD165 |
| | S 1000 RR | 1000 | 09-14 | FD437 | FD165 |
| | S 1000 RR ABS | 1000 | 09-14 | FD437 | FD165 |
| | S 1000 RR | 1000 | 15- | FD475 | FD165 |
| | S 1000 RR ABS | 1000 | 15- | FD475 | FD165 |
| **BORILE** | | | | | |
| | B 500 CR | 500 | 02- | FD068 | FD165 |
| | B 500 MT | 500 | 02- | FD068 | FD165 |
| **CCM** | | | | | |
| | 404 E | 404 | 03- | FD138 | FD165 |
| | 404 DS | 404 | 03- | FD138 | FD165 |
| | 450 ADVENTURE | 450 | 15- | FD172 | FD165 |
| | 604 E DS | 604 | 98-03 | FD138 | FD165 |
| | 604 E SUPER MOTARD | 604 | 98-03 | FD138 | FD165 |
| | 604 RS ROADSTER | 604 | 00-03 | FD138 | FD165 |
| | 644 DS | 644 | 04- | FD138 | FD165 |
| | 644 DS SUPER MOTARD | 644 | 04- | FD138 | FD165 |
| | R 30 | 644 | 02- | FD138 | FD165 |
| | FT 710 | 710 | 08- | FD138 | FD165 |
| **DUCATI** | | | | | |
| | GT 1000 | 1000 | 05- | FD172 | FD165 |
| | PAUL SMART 1000 | 1000 | 05- | FD172 | FD165 |
| | SPORT 1000 | 1000 | 05- | FD172 | FD165 |
| | SPORT 1000 S | 1000 | 07- | FD172 | FD165 |
| **GILERA-PIAGGIO** | | | | | |
| | GP 850 CORSA | 850 | 09- | FD262 | FD165 |
| | HIGHLAND | | | | |
| | 950 V2 OUTBACK | 950 | 00- | FD138 | FD165 |
| | 950 V2 MOTARD | 950 | 00- | FD138 | FD165 |
| **HONDA** | | | | | |



For other models years previous to 1990 visit **www.galferonline.es** · Para otros modelos anteriores al año 1990 visitar **www.galferonline.es**

For consult TÜV (ABE) type approvals visit **www.galfermoto.com --> DOWNLOAD --> TÜV CERTIFICATIONS** · Para consultar las homologaciones TÜV (ABE) visitar **www.galfermoto.com --> DESCARGAS --> CERTIFICACIONES TÜV**

| | | | | |
|---|---|---|---|---|
| CB 500 | 500 | 97-97 | FD172 | FD165 |
| CB 500 S | 500 | 98- | FD172 | FD165 |
| NX 650 DOMINATOR | 650 | 97- | FD172 | FD165 |
| SLR 650 | 650 | 96- | FD172 | FD165 |
| VIGOR 650 | 650 | 99- | FD172 | FD165 |
| **HUSABERG** | | | | |
| 650 FS | 650 | 03-03 | FD068 | FD165 |
| 650 FS | 650 | 04- | | FD165 |
| **HUSQVARNA** | | | | |
| 510 SM R | 510 | 05-05 | FD262 | FD165 |
| 570 SM S | 570 | 01- | FD176 | FD165 |
| 570 SM R | 570 | 01- | FD068 | FD165 |
| NOX | 600 | 01- | FD068 | FD165 |
| 610LT | 610 | 00- | FD176 | FD165 |
| 610 SM S | 610 | 00-04 | FD176 | FD165 |
| 610 SM R | 610 | 00-04 | FD068 | FD165 |
| 610 SM R | 610 | 05-05 | FD262 | FD165 |
| 610 SM R | 610 | 06- | FD262 | FD165 |
| 610 SM ie | 610 | 07- | FD262 | FD165 |
| 630 SM | 630 | 10- | FD262 | FD165 |
| 630 SMS | 630 | 11- | FD262 | FD165 |
| MOAB | 650 | 12- | FD172 | FD165 |
| TR 650 STRADA | 650 | 12- | FD172 | FD165 |
| TR 650 TERRA | 650 | 12- | FD172 | FD165 |
| 701 SUPERMOTO | 701 | 15- | FD262 | FD165 |
| NUDA 900 | 900 | 12- | FD176 | FD165 |
| NUDA 900 R | 900 | 11- | FD373 | FD165 |
| **KTM** | | | | |
| 200 DUKE | 200 | 12- | FD450 | FD165 |
| 200 DUKE ABS | 200 | 14- | FD450 | FD165 |
| RC 200 | 200 | 14- | FD450 | FD165 |
| 390 DUKE | 390 | 13- | FD450 | FD165 |
| 390 DUKE ABS | 390 | 14- | FD450 | FD165 |
| RC 390 | 390 | 14- | FD450 | FD165 |
| 620 DUKE | 620 | 95-02 | FD068 | FD165 |
| 625 SMC | 625 | 06- | FD176 | FD165 |
| 640 LC4 ADVENTURE R | 640 | 99-05 | FD138 | FD165 |
| 640 LC4 ADVENTURE R | 640 | 06- | FD138 | FD165 |
| 640 DUKE | 640 | 99- | FD176 | FD165 |
| 640 LC4 SUPERMOTARD | 640 | 02-04 | FD068 | FD165 |
| 640 LC4 SUPERMOTARD (DF606SM) | 640 | 05- | FD176 | FD165 |
| 660 SMC SUPERMOTARD | 660 | 99- | FD068 | FD165 |
| 660 SMC SUPERMOTARD | 660 | 99- | FD176 | FD165 |
| 690 DUKE | 690 | 08- | FD262 | FD165 |
| 690 DUKE III R | 690 | 10- | FD262 | FD165 |
| 690 DUKE | 690 | 12- | FD176 | FD165 |
| 690 DUKE R | 690 | 13- | FD373 | FD165 |
| 690 SM | 690 | 07- | FD176 | FD165 |
| 690 SM /PRESTIGE | 690 | 07- | FD262 | FD165 |
| 690 SMC | 690 | 08- | FD262 | FD165 |
| 690 SMC R | 690 | 13- | FD262 | FD165 |
| 690 SMC R ABS | 690 | 13- | FD262 | FD165 |
| 690 SMR | 690 | 07- | FD262 | FD165 |
| LC8 990 DUKE | 950 | 03- | FD262 | FD165 |
| SUPER DUKE | 950 | 05- | FD262 | FD165 |
| 990 SUPER DUKE | 990 | 06- | FD262 | FD165 |
| **VERTEMATI** | | | | |
| 492 SUPERMOTARD | 500 | 99-00 | FD068 | FD165 |
| **VOR** | | | | |
| RC 503 | 503 | 01- | FD176 | FD165 |
| SM 503 | 503 | 00- | FD068 | FD165 |
| **VOXAN** | | | | |
| SCRAMBLER | 1000 | 00- | FD176 | FD165 |
| **YAMAHA** | | | | |
| MT-03 | 660 | 06- | FD169 | FD165 |
| SZR 660 | 660 | 95- | FD068 | FD165 |
| XT 660 R | 660 | 04- | FD172 | FD165 |
| XT 660 X | 660 | 04- | FD176 | FD165 |
| XT 660 Z TENERE | 660 | 08- | FD138 | FD165 |

## FD 167

mm: 68,2 x 53,1 — A — 9,8 — B

mm: 89,4 x 51,2 — A — 8,8 — B

G1054 | G1371 |

| BRAND MARCA | MODEL MODELO | C.C. | YEAR | FRONT | REAR |
|---|---|---|---|---|---|
| **CFMOTO** | | | | | |
| NK 650 | | 650 | 13- | FD266 | FD167 |
| **KAWASAKI** | | | | | |
| ZEPHYR 400 / X | | 400 | 02- | FD090 | FD167 |
| ZRX 400 / II | | 400 | 01- | FD272 | FD167 |
| ZXR 400 | | 400 | 99- | FD156 | FD167 |
| ZEPHYR 550 | | 550 | 96- | FD090 | FD167 |
| ZX-6R | | 600 | 95-97 | FD107 | FD167 |
| ZX-6R | | 600 | 98-99 | FD156 | FD167 |
| ZX-6R | | 600 | 00-02 | FD156 | FD167 |
| ZX-6RR | | 600 | 03-04 | FD290 | FD167 |
| ZX-6RR | | 600 | 05-06 | FD290 | FD167 |
| ZX-6R | | 600 | 07-08 | FD371 | FD167 |
| ZX-6R | | 600 | 09- | FD371 | FD167 |
| ZZR 600 | | 600 | 93- | FD107 | FD167 |
| ZX-6R 636 | | 636 | 02-02 | FD156 | FD167 |
| ZX-6R 636 | | 636 | 03-04 | FD290 | FD167 |
| ZX-6R 636 | | 636 | 05-12 | FD290 | FD167 |
| ER-6 F / NINJA 650 R (USA) RIGHT / DER | | 650 | 05- | FD179 | FD167 |
| ER-6 N RIGHT / DER | | 650 | 05- | FD179 | FD167 |
| VERSYS 650 RIGHT / DER | | 650 | 06-07 | FD179 | FD167 |
| VERSYS 650 RIGHT / DER | | 650 | 08-09 | FD179 | FD167 |
| VERSYS 650 RIGHT / DER | | 650 | 10-14 | FD179 | FD167 |
| Z 750 RIGHT/DER | | 750 | 04-06 | FD179 | FD167 |
| Z 750 S RIGHT/DER | | 750 | 05-06 | FD179 | FD167 |
| ZX-9R NINJA | | 900 | 94-95 | FD107 | FD167 |
| ZX-9R NINJA | | 900 | 96-97 | FD156 | FD167 |
| ZX-9R NINJA | | 900 | 98-99 | FD156 | FD167 |
| ZX-9R NINJA | | 900 | 00-01 | FD156 | FD167 |
| ZX-9R NINJA | | 900 | 02- | FD331 | FD167 |
| Z 1000 | | 1000 | 03-06 | FD331 | FD167 |
| Z 1000 | | 1000 | 10-14 | FD325 | FD167 |
| Z 1000 ABS | | 1000 | 14- | FD325 | FD167 |
| Z 1000 SX | | 1000 | 11- | FD325 | FD167 |
| ZX 10R | | 1000 | 04-05 | FD290 | FD167 |
| ZX 10R | | 1000 | 06-07 | FD290 | FD167 |
| ZX 10R | | 1000 | 08-10 | FD325 | FD167 |
| GPZ 1100 (ZX1100E1) RIGHT/DER | | 1100 | 95- | FD179 | FD167 |
| **KAWASAKI INDONESIA** | | | | | |
| ZX-6R | | 600 | 09- | FD371 | FD167 |
| ER-6 N RIGHT / DER | | 650 | 09- | FD179 | FD167 |
| **KAWASAKI MALASIA** | | | | | |
| ER-6 F / RIGHT / DER | | 650 | 05- | FD179 | FD167 |
| ER-6 N RIGHT / DER | | 650 | 05- | FD179 | FD167 |
| VERSYS 650 RIGHT / DER | | 650 | 10- | FD179 | FD167 |
| **SUZUKI** | | | | | |
| GSX 250 FX | | 250 | 02- | FD179 | FD167 |

## FD 168

mm: 77,4 x 42,8 — A — 8,4 — A

G1054 | G1375 | G1003 | G1300

| BRAND MARCA | MODEL MODELO | C.C. | YEAR | FRONT | REAR |
|---|---|---|---|---|---|
| **BREMBO RACING** | | | | | |
| XA3B8** | | | - | FD168 | |
| **HONDA** | | | | | |
| TSR 250 | | 250 | 98- | FD168 | FD163 |
| VTR 1000 SP-1 KIT | | 1000 | 00-01 | FD168 | FD163 |

## FD 169

mm: 94,2 x 41,0 — A — 10,0 — A

G1054 | G1370 | G1375 | G1380 |

| BRAND MARCA | MODEL MODELO | C.C. | YEAR | FRONT | REAR |
|---|---|---|---|---|---|
| **ITALJET** | | | | | |
| JUPITER | | 250 | 02- | FD169 | FD214 |
| **LINHAI** | | | | | |
| MONARCH | | 160 | 04- | FD169 | FD214 |
| MAIN STR. 260 | | 260 | 04- | FD169 | FD214 |
| **LONCIN** | | | | | |
| LX 150 | | 150 | 02- | FD169 | MF |
| **MBK MOTOBEKANE** | | | | | |
| SKYLINER | | 250 | 00- | FD169 | FD214 |
| **MINELLI** | | | | | |
| OMEGA 250 | | 250 | 06- | FD169 | FD214 |
| **MOTOM** | | | | | |
| TRANSCITY | | 150 | 07- | FD169 | FD073 |
| **SUMCO** | | | | | |
| MS 150 | | 150 | 06- | FD169 | FD214 |
| **YAMAHA** | | | | | |
| SP 250 MAGESTY | | 250 | 96-97 | FD169 | MF457 |
| SP 250 DX MAGESTY | | 250 | 98-99 | FD169 | FD214 |
| SP 250 DX MAGESTY | | 250 | 00- | FD169 | FD214 |
| XV 250 VIRAGO | | 250 | 96-00 | FD169 | MF451 |
| XVS 250 DRAG STAR | | 250 | 01- | FD169 | MF640 |
| SP 400 MAGESTY | | 400 | 05- | FD169 | FD352 |
| SP 400 GRAND MAJESTY (JAP) | | 400 | 05- | FD169 | FD352 |
| SR 400 | | 400 | 02-13 | FD169 | MF |
| XJR 400 R | | 400 | 93-96 | FD169 | FD057 |
| XP 500 T-MAX | | 500 | 04-07 | FD169 | FD352 |
| XP 500 T-MAX ABS | | 500 | 04-07 | FD169 | FD352 |
| XP 500 T-MAX BLACK MAX | | 500 | 06-07 | FD169 | FD352 |
| FZ 6 FAZER | | 600 | 04-06 | FD169 | FD134 |
| FZ 6 S FAZER | | 600 | 04-06 | FD169 | FD134 |
| FZ 6 /S FAZER ABS | | 600 | 06-06 | FD169 | FD134 |
| XJ 6 S DIVERSION (FZ 6 R USA) | | 600 | 09- | FD169 | FD103 |
| XJ 6 S DIVERSION ABS | | 600 | 09- | FD169 | FD103 |
| XJ 6 S DIVERSION F | | 600 | 10- | FD169 | FD103 |
| XJ 6 S DIVERSION NAKED | | 600 | 09- | FD169 | FD103 |
| XJ 600 N / S | | 600 | 96-03 | FD169 | FD069 |
| XJ 600 S DIVERSION | | 600 | 98-08 | FD169 | FD069 |
| MT-03 | | 660 | 06- | FD169 | FD165 |
| XS-V1 SAKURA | | 1000 | 09- | FD169 | FD057 |
| XVS 1100 DRAG STAR | | 1100 | 99- | FD169 | FD057 |
| XVS MIDNIGHT STAR 1300 | | 1300 | 07- | FD169 | FD295 |

## FD 170

mm: 39,8 x 56,3 — A — 7,3 — A

G1054 | G1805 |

| BRAND MARCA | MODEL MODELO | C.C. | YEAR | FRONT | REAR |
|---|---|---|---|---|---|
| **GILERA-PIAGGIO** | | | | | |
| RC 600 R, COBRA | | 600 | 94- | FD118 | FD170 |
| **MZ/MuZ** | | | | | |
| SKORPION | | 500 | 94- | FD121 | FD170 |

## FD 171

mm: 39,8 x 54,0 — A — 6,4 — A

G1054 |

| BRAND MARCA | MODEL MODELO | C.C. | YEAR | FRONT | REAR |
|---|---|---|---|---|---|
| **APRILIA** | | | | | |
| PEGASO 650 | | 650 | 94-97 | FD162 | FD171 |
| **CAGIVA** | | | | | |

| | | | | |
|---|---|---|---|---|
| RIVER 500 | 500 | 00- | FD068 | FD171 |

**FD 172** — mm 108,7 x 39,8 — 7,5 — A / A[1]

G1054 | G1370

| BRAND MARCA | MODEL MODELO | C.C. | YEAR | FRONT | REAR |
|---|---|---|---|---|---|
| **APRILIA** | | | | | |
| MOTO 6.5 | | 650 | 95- | FD172 | FD135 |
| PEGASO 650 | | 650 | 98-00 | FD172 | FD075 |
| PEGASO 650 ie | | 650 | 01-06 | FD172 | FD165 |
| CAPONORD RAID | | 1000 | 03- | FD172 | FD186 |
| ETV CAPONORD | | 1000 | 01- | FD172 | FD220 |
| PEGASO 1000 | | 1000 | 01- | FD172 | FD165 |
| **BIMOTA** | | | | | |
| DBx | | 1100 | 13- | FD172 | FD172 |
| **BMW** | | | | | |
| C1 200 | | 200 | 01- | FD172 | FD165 |
| F 650 | | 650 | 93- | FD172 | FD165 |
| F 650 CS SCARVER | | 650 | 01- | FD172 | FD165 |
| F 650 DAKAR | | 650 | 00-01 | FD172 | FD165 |
| F 650 GS | | 650 | 00- | FD172 | FD165 |
| F 650 GS BICILINDRICO | | 650 | 07- | FD172 | FD165 |
| F 650 ST | | 650 | 97- | FD172 | FD165 |
| G 650 GS | | 650 | 09- | FD172 | FD165 |
| G 650 XCHALLENGE | | 650 | 07- | FD172 | FD165 |
| G 650 XCOUNTRY | | 650 | 07- | FD172 | FD165 |
| F 700 GS | | 700 | 13- | FD172 | FD165 |
| F 800 GS | | 800 | 08- | FD172 | FD165 |
| S 1000 RX | | 1000 | 15- | FD475 | FD172 |
| HP 2 ENDURO | | 1150 | 05- | FD172 | FD186 |
| HP 2 SM | | 1150 | 06-06 | FD172 | FD186 |
| R 1200 GS LC | | 1200 | 13- | FD475 | FD172 |
| R 1200 GS LC ADVENTURE | | 1200 | 13- | FD475 | FD172 |
| R 1200 RT LC | | 1200 | 14- | FD475 | FD172 |
| R 1200 RS | | 1200 | 15- | FD475 | FD172 |
| K 1600 GT | | 1600 | 11- | FD272 | FD172 |
| K 1600 GT SE | | 1600 | 12- | FD272 | FD172 |
| K 1600 GTL | | 1600 | 11- | FD272 | FD172 |
| K 1600 GTL E | | 1600 | 12- | FD272 | FD172 |
| **CAGIVA** | | | | | |
| CANYON | | 900 | 97- | FD172 | FD117 |
| **CCM** | | | | | |
| 450 ADVENTURE | | 450 | 15- | FD172 | FD165 |
| **DUCATI** | | | | | |
| GT 1000 | | 1000 | 05- | FD172 | FD165 |
| PAUL SMART 1000 | | 1000 | 05- | FD172 | FD165 |
| SPORT 1000 | | 1000 | 05- | FD172 | FD165 |
| SPORT 1000 S | | 1000 | 07- | FD172 | FD165 |
| DIAVEL 1200 | | 1200 | 11- | FD373 | FD172 |
| DIAVEL STRADA 1200 | | 1200 | 13- | FD373 | FD172 |
| MULTISTRADA 1200 | | 1200 | 15- | FD475 | FD172 |
| MULTISTRADA 1200 S | | 1200 | 15- | FD373 | FD172 |
| MULTISTRADA 1200 S D air | | 1200 | 15- | FD373 | FD172 |
| **HONDA** | | | | | |
| CB 500 | | 500 | 97-97 | FD172 | FD165 |
| CB 500 S | | 500 | 98- | FD172 | FD165 |
| NTV 650 DEAUVILLE | | 650 | 98-01 | FD172 | FD103 |
| NX 650 DOMINATOR | | 650 | 97- | FD172 | FD165 |
| SLR 650 | | 650 | 96- | FD172 | FD165 |
| VIGOR 650 | | 650 | 99- | FD172 | FD165 |
| **HUSQVARNA** | | | | | |
| MOAB | | 650 | 12- | FD172 | FD165 |
| TR 650 STRADA | | 650 | 12- | FD172 | FD165 |
| TR 650 TERRA | | 650 | 12- | FD172 | FD165 |
| **KTM** | | | | | |
| 950 ADVENTURE S | | 950 | 03- | FD172 | FD138 |
| 950 R SUPER ENDURO | | 950 | 06- | FD172 | FD138 |
| 990 ADVENTURE R | | 990 | 09- | FD172 | FD138 |
| 990 ADVENTURE / S | | 990 | 06- | FD172 | FD138 |
| 990 ADVENTURE / S ABS | | 990 | 06- | FD172 | FD138 |
| 990 R SUPER ENDURO | | 990 | 06- | FD172 | FD138 |
| 1290 SUPER ADVENTURE | | 1290 | 15- | FD475 | FD172 |
| **MOTO MORINI** | | | | | |
| GRANPASSO | | 1200 | 08- | FD172 | FD138 |
| SCRAMBLER | | 1200 | 09- | FD172 | FD138 |
| **POLARIS** | | | | | |
| V 92 C | | 1500 | 00- | FD176 | FD172 |
| V 92 SC | | 1500 | 00- | FD176 | FD172 |
| **TRIUMPH** | | | | | |
| THUNDERBIRD 1600 | | 1600 | 09- | FD099 | FD172 |
| THUNDERBIRD COMMANDER | | 1700 | 14- | FD099 | FD172 |
| THUNDERBIRD STORM 1700 | | 1700 | 11- | FD099 | FD172 |
| ROCKET III | | 2300 | 04- | FD099 | FD172 |
| ROCKET III ROADSTER | | 2300 | 10- | FD099 | FD172 |
| **VICTORY** | | | | | |
| CRUISER | | 1500 | 01- | FD176 | FD172 |
| DE LUXE | | 1500 | 01- | FD176 | FD172 |
| GUNNER | | 1700 | 15- | FD331 | FD172 |
| HAMMER / S | | 1500 | 01-07 | FD176 | FD172 |
| HIGH BALL | | 1700 | 15- | FD331 | FD172 |
| JUDGE | | 1700 | 15- | FD331 | FD172 |
| SPORTCRUISER | | 1500 | 01- | FD176 | FD172 |
| TOURING CRUISER | | 1500 | 03- | FD176 | FD172 |
| VEGAS | | 1500 | 03-07 | FD176 | FD172 |
| V92C | | 1500 | 01- | FD176 | FD172 |
| **YAMAHA** | | | | | |
| XT 660 R | | 660 | 04- | FD172 | FD165 |

**FD 174** — mm 109,0 x 44,0 — 8,5 — A / B
mm 131,9 x 37,2 — 8,4 — A / B

G1054 | G1370 | G1375 | G1300

| BRAND MARCA | MODEL MODELO | C.C. | YEAR | FRONT | REAR |
|---|---|---|---|---|---|
| **KAWASAKI** | | | | | |
| VN 250 ELIMINATOR | | 250 | 99- | FD174 | MF |
| ER-5 | | 500 | 01- | FD174 | MF152 |
| ER-6 F / NINJA 650 R (USA) LEFT / IZQ | | 650 | 05- | FD174 | |
| ER-6 N LEFT / IZQ | | 650 | 05- | FD174 | |
| KLR 650 C1/C2 | | 650 | 95-07 | FD174 | FD075 |
| VERSYS 650 LEFT /IZQ | | 650 | 06-07 | FD174 | |
| VERSYS 650 LEFT /IZQ | | 650 | 08-09 | FD174 | |
| VERSYS 650 LEFT /IZQ | | 650 | 10-14 | FD174 | |
| Z 750 LEFT/IZQ | | 750 | 04-06 | FD174 | |
| Z 750 S LEFT/IZQ | | 750 | 05-06 | FD174 | |
| ZR-7 S IZQ/LEFT | | 750 | 99-04 | FD174 | FD179 |
| ZR-7 S IZQ/LEFT | | 750 | 05- | FD174 | FD179 |
| VN 800 CLASSIC | | 800 | 98- | FD174 | MF |
| VN 800 DRIFTER | | 800 | 99- | FD174 | FD179 |
| VN 900 | | 900 | 07- | FD174 | FD179 |
| VN 900 CLASIC | | 900 | 06- | FD174 | FD179 |
| VN 900 CLASIC SPECIAL EDITION | | 900 | 11- | FD174 | FD179 |
| KLV 1000 LEFT/IZQ | | 1000 | 04- | FD174 | |
| GPZ 1100 (ZX1100E1) LEFT/IZQ | | 1100 | 95- | FD174 | |
| ZEPHYR 1100 LEFT/IZQ | | 1100 | 96- | FD174 | |
| VN 1500 DRIFTER | | 1500 | 02- | FD174 | FD179 |
| VN-CLASSIC | | 1500 | 96-97 | FD174 | FD062 |
| VN-EASSIC Fi | | 1500 | 00- | FD174 | FD179 |
| VN-CLASSIC TOURER LEFT/IZQ | | 1500 | 98-99 | FD174 | |
| VN-TOURER LEFT/IZQ | | 1500 | 03- | FD174 | |
| VN 1600 SUMO/CLASSIC LEFT/IZQ | | 1600 | 03- | FD174 | |
| VN 1600 NOMAD LEFT/IZQ | | 1600 | 05- | FD174 | |
| VN 1700 CLASSIC LEFT/IZQ | | 1700 | 09- | FD174 | |
| VN 1700 CLASSIC TOURER LEFT/IZQ | | 1700 | 09- | FD174 | |
| **KAWASAKI INDONESIA** | | | | | |
| ER-6 N LEFT / IZQ | | 650 | 09- | FD174 | |
| **KAWASAKI MALASIA** | | | | | |
| ER-6 F / LEFT / IZQ | | 650 | 05- | FD174 | |
| ER-6 N LEFT / IZQ | | 650 | 05- | FD174 | |
| VERSYS 650 LEFT /IZQ | | 650 | 10- | FD174 | |
| **SUZUKI** | | | | | |
| TU 250 GRASSTRACKER/BIG BOY | | 250 | 00- | FD174 | MF |
| TU 250 X | | 250 | 02- | FD174 | MF151 |
| SFV 400 GLADIUS LEFT/IZQ | | 400 | 10- | FD174 | |
| SV 400 /S IZ. | | 400 | 99- | FD174 | FD111 |
| GSF 600 N BANDIT IZQ. | | 600 | 00- | FD174 | FD111 |
| GSX 600 F IZQ. (KATANA 600 USA) | | 600 | 98-03 | FD174 | FD111 |
| GSX 600 F IZQ. (KATANA 600 USA) | | 600 | 04- | FD174 | FD111 |
| DL 650 V-STORM IZQ. | | 650 | 04-06 | FD174 | FD134 |
| DL 650 V-STORM IZQ. | | 650 | 07- | FD174 | FD134 |
| DL 650 V-STORM IZQ./ABS | | 650 | 07- | FD174 | FD134 |
| DL 650 V-STORM XPEDITION IZQ. | | 650 | 11- | FD174 | FD134 |
| DL 650 V-STORM XPEDITION IZQ./ABS | | 650 | 11-12 | FD174 | FD134 |
| DL 650 V-STORM XPEDITION IZQ./ABS | | 650 | 13-13 | FD174 | FD134 |
| DL 650 V-STORM XT IZQ./ABS | | 650 | 15- | FD174 | FD134 |
| GSF 650 BANDIT /S IZQ. | | 650 | 05-05 | FD174 | FD267 |
| GSF 650 BANDIT /S/ ABS IZQ. | | 650 | 06- | FD174 | FD134 |
| SFV 650 GLADIUS LEFT/IZQ | | 650 | 09- | FD174 | |
| SFV 650 GLADIUS ABS LEFT/IZQ | | 650 | 10- | FD174 | |
| SV 650 /S IZQ. | | 650 | 99-02 | FD174 | FD111 |
| SV 650 /S IZQ. | | 650 | 03-03 | FD174 | FD134 |
| SV 650 /S IZQ. | | 650 | 04-06 | FD174 | FD134 |
| SV 650 ABS IZQ. | | 650 | 07- | FD174 | FD134 |
| GSR 750 LEFT/IZQ | | 750 | 11- | FD174 | |
| GSR 750 ABS LEFT/IZQ | | 750 | 11- | FD174 | |
| GSX 750 F IZQ | | 750 | 98- | FD174 | FD111 |
| GSX 750 F VS IZQ. (KATANA 750 USA) | | 750 | 99-02 | FD174 | FD111 |
| GSX 750 F DER. | | 750 | 03- | FD174 | |
| DL 1000 V-STORM IZQ. | | 1000 | 01-13 | FD174 | FD134 |
| M 1500 LEFT/IZQ | | 1500 | 09- | FD174 | |
| VL 1500 INTRUDER LEFT/IZQ | | 1500 | 02- | FD174 | |

**FD 175** — mm 60,0 x 44,0 — 9,0 — A / A

G1054

| BRAND MARCA | MODEL MODELO | C.C. | YEAR | FRONT | REAR |
|---|---|---|---|---|---|
| **CSR** | | | | | |
| ONA | | 150 | 06- | FD175 | FD175 |
| SCOO | | 150 | 06- | FD175 | FD175 |
| **KEEWAY** | | | | | |
| VIVA II 150 | | 150 | 05- | FD086 | FD175 |
| **KYMCO** | | | | | |
| HEROISM | | 150 | 94- | FD175 | MF |
| **MOTOM** | | | | | |
| DOLCEVITA | | 150 | 07- | FD175 | FD073 |

**FD 176** — mm 75,0 x 55,5 — 8,7 — A / A

G1054 | G1370 | G1375 | G1300

| BRAND MARCA | MODEL MODELO | C.C. | YEAR | FRONT | REAR |
|---|---|---|---|---|---|
| **APRILIA** | | | | | |
| RS 250 | | 250 | 98- | FD176 | FD153 |
| PEGASO 650 ie | | 650 | 07- | FD176 | FD165 |
| PEGASO 650 STRADA | | 650 | 05- | FD176 | FD165 |
| BLUE MARLIN | | 1000 | 02- | FD176 | FD220 |
| RST FUTURA | | 1000 | 01- | FD176 | FD138 |
| RSV MILLE | | 1000 | 98-00 | FD176 | FD220 |
| RSV MILLE R | | 1000 | 00-00 | FD176 | FD220 |
| RSV MILLE SP | | 1000 | 00- | FD176 | FD220 |
| RSV TUONO | | 1000 | 02-05 | FD176 | FD220 |
| RSV TUONO V4 R | | 1000 | 11- | FD176 | FD220 |
| SL 1000 FALCO | | 1000 | 00- | FD176 | FD220 |
| DORSODURO 1200 | | 1200 | 11- | FD176 | FD165 |
| **BENELLI** | | | | | |
| UNO C 150 | | 150 | 13- | FD176 | FD012 |
| UNO C 250 | | 250 | 13- | FD176 | FD012 |
| BN 302 | | 300 | 14- | FD176 | FD214 |
| BN 600 | | 600 | 13- | FD176 | FD220 |



For other models years previous to 1990 visit **www.galferonline.es** - Para otros modelos anteriores al año 1990 visitar **www.galferonline.es**
For consult TÜV (ABE) type approvals visit **www.galfermoto.com --> DOWNLOAD --> TÜV CERTIFICATIONS** - Para consultar las homologaciones TÜV (ABE) visitar **www.galfermoto.com --> DESCARGAS --> CERTIFICACIONES TÜV**

| | | | | |
|---|---|---|---|---|
| 756 | 750 | 10- | FD176 | FD220 |
| TNT 899 S/T | 900 | 08-10 | FD176 | FD220 |
| TRE-K 899 | 900 | 09- | FD176 | FD220 |
| TNT 1130 | 1130 | 04- | FD176 | FD220 |
| TREK AMAZONAS | 1130 | 07- | FD176 | FD220 |
| **BIMOTA** | | | | |
| V-DUE 500 EVOLUZIONE | 500 | 00- | FD176 | FD012 |
| DB4 | 900 | 98-99 | FD176 | FD012 |
| **BMW** | | | | |
| G 650 XMOTO | 650 | 07- | FD176 | FD165 |
| F 800 GT | 800 | 13- | FD176 | FD165 |
| F 800 R | 800 | 09-14 | FD176 | FD165 |
| F 800 S | 800 | 06- | FD176 | FD165 |
| F 800 ST | 800 | 06- | FD176 | FD165 |
| **BREMBO RACING** | | | | |
| 220A016** | | - | FD176 | |
| 220A168** | | - | FD176 | |
| **CAGIVA** | | | | |
| V-RAPTOR | 650 | 01- | FD176 | FD220 |
| RAPTOR | 1000 | 00- | FD176 | FD220 |
| V-RAPTOR | 1000 | 00- | FD176 | FD220 |
| X-TRA RAPTOR | 1000 | 02- | FD176 | FD220 |
| **DUCATI** | | | | |
| 400 MONSTER (JAPON) | 400 | 04- | FD176 | FD220 |
| MONSTER 620 S i.e | 620 | 01-04 | FD176 | FD012 |
| MULTISTRADA MTS 620 DARK | 620 | 05- | FD176 | FD012 |
| 620 SS | 620 | 03- | FD176 | FD220 |
| MONSTER 696 | 695 | 08- | FD176 | FD012 |
| 748 | 748 | 98-99 | FD176 | FD012 |
| 748 E/S | 748 | 00-02 | FD176 | FD012 |
| 750 SPORT | 750 | 01- | FD176 | FD220 |
| 750 SS | 750 | 98- | FD176 | FD220 |
| HYPERMOTARD | 796 | 10- | FD176 | FD220 |
| MONSTER 796 | 796 | 10- | FD176 | FD220 |
| MONSTER 796 ABS | 796 | 10- | FD176 | FD220 |
| MONSTER 800 S i.e | 800 | 03-04 | FD176 | FD220 |
| 800 SS | 800 | 03- | FD176 | FD220 |
| 800 SPORT | 800 | 03- | FD176 | FD220 |
| 848 | 848 | 08- | FD176 | FD220 |
| 848 S | 848 | 08- | FD176 | FD220 |
| 848 STREETFIGHTER | 848 | 12- | FD176 | FD220 |
| MH 900 E | 900 | 00- | FD176 | FD012 |
| 900 SS | 900 | 98- | FD176 | FD220 |
| MONSTER S4 | 916 | 01-02 | FD176 | FD012 |
| ST 4 | 916 | 99- | FD176 | FD220 |
| ST 3 / s ABS | 992 | 06- | FD176 | FD220 |
| 996 S | 996 | 99-01 | FD176 | FD012 |
| MONSTER S4R | 996 | 03-05 | FD176 | FD220 |
| 998 | 998 | 02- | FD176 | FD012 |
| 1000 MONSTER S i.e. | 1000 | 03-05 | FD176 | FD220 |
| 1000 MONSTER S2R | 1000 | 06- | FD176 | FD220 |
| 1000 MONSTER S4R | 1000 | 03-05 | FD176 | FD220 |
| MULTISTRADA 1000 DS | 1000 | 03- | FD176 | FD220 |
| SS 1000 DS | 1000 | 03- | FD176 | FD220 |
| HYPERMOTARD | 1100 | 07-09 | FD176 | FD220 |
| HYPERMOTARD EVO | 1100 | 10- | FD176 | FD220 |
| MONSTER | 1100 | 09- | FD176 | FD220 |
| MONSTER EVO | 1100 | 11- | FD176 | FD220 |
| MONSTER S | 1100 | 09- | FD176 | FD220 |
| MONSTER S (OHLINS) | 1100 | 09- | FD176 | FD220 |
| MULTISTRADA 1100 DS | 1100 | 07- | FD176 | FD220 |
| MULTISTRADA 1100 S DS | 1100 | 07- | FD176 | FD220 |
| MULTISTRADA 1200 | 1200 | 10-14 | FD176 | FD220 |
| MULTISTRADA 1200 PIKES PEAK | 1200 | 13-14 | FD176 | FD220 |
| MULTISTRADA 1200 S GRAN TURISMO | 1200 | 13-14 | FD176 | FD220 |
| MULTISTRADA 1200 SS | 1200 | 10-14 | FD176 | FD220 |
| MULTISTRADA 1200 ST | 1200 | 10-14 | FD176 | FD220 |
| **HOREX** | | | | |
| VR6 | 1250 | 12- | FD176 | FD220 |
| **HUSQVARNA** | | | | |
| 530 RR | 530 | 09- | FD176 | FD291 |
| 570 SM S | 570 | 01- | FD176 | FD165 |
| 610LT | 610 | 00- | FD176 | FD165 |
| 610 SM S | 610 | 00-04 | FD176 | FD165 |
| NUDA 900 | 900 | 12- | FD176 | FD165 |
| **HYOSUNG** | | | | |
| GD 250 N | 250 | 14- | FD176 | FD153 |
| GD 250 R | 250 | 14- | FD176 | FD153 |

| | | | | |
|---|---|---|---|---|
| GT 650 i | 650 | 09-11 | FD176 | FD073 |
| GT 650 Pi | 650 | 13- | FD176 | FD073 |
| GT 650 Ri | 650 | 09- | FD176 | FD073 |
| AQUILA 700 GV i | 700 | 10- | FD176 | FD063 |
| ST 7 | 700 | 10- | FD176 | FD063 |
| **KTM** | | | | |
| 625 SMC | 625 | 06- | FD176 | FD165 |
| 640 DUKE | 640 | 99- | FD176 | FD165 |
| 640 LC4 SUPERMOTARD (DF606SM) | 640 | 05- | FD176 | FD165 |
| 660 SMC SUPERMOTARD | 660 | 99- | FD176 | FD165 |
| 690 DUKE | 690 | 12- | FD176 | FD165 |
| 690 SM | 690 | 07- | FD176 | FD165 |
| 1050 ADVENTURE | 1050 | 15- | FD176 | FD138 |
| 1190 ADVENTURE | 1190 | 13- | FD176 | FD138 |
| 1190 ADVENTURE R | 1190 | 13- | FD176 | FD138 |
| **MOTO GUZZI** | | | | |
| 750 BREVA i.e. | 750 | 03- | FD176 | FD012 |
| NEVADA 750 AQUILA NERA | 750 | 10- | FD176 | FD220 |
| STR V 750 ie | 750 | 03- | FD176 | FD220 |
| V 7 CLASSIC | 750 | 08- | FD176 | FD012 |
| V 7 CLASSIC CAFÉ | 750 | 09- | FD176 | FD220 |
| V 7 RACER | 750 | 11- | FD176 | FD220 |
| V 7 SCRAMBLER | 750 | 12- | FD176 | FD220 |
| GRISO 850 8V | 850 | 06-08 | FD176 | FD220 |
| GRISO 850 8V SE SPECIAL EDITION | 850 | 09- | FD176 | FD220 |
| STR BREVA 850 | 850 | 06- | FD176 | FD220 |
| 940 CUSTOM | 940 | 07- | FD176 | FD138 |
| CALIFORNIA AQUILA NERA | 1000 | 10- | FD176 | FD220 |
| CALIFORNIA SPECIAL SPORT | 1000 | 03- | FD176 | FD138 |
| CALIFORNIA STONE | 1000 | 03- | FD176 | FD138 |
| EV STONE | 1000 | 02- | FD176 | FD220 |
| V11 SPORT BALLABIO | 1000 | 03- | FD176 | FD220 |
| BREVA 1100 | 1100 | 05- | FD176 | FD138 |
| GRISO | 1100 | 05- | FD176 | FD220 |
| STR 1100 | 1100 | 04- | FD176 | FD220 |
| V-11 LE MANS ROSSO CORSA | 1100 | 03- | FD176 | FD012 |
| V-11 SCURA | 1100 | 03- | FD176 | FD012 |
| V-11 SPORT / LE MANS | 1100 | 99- | FD176 | FD012 |
| STELVIO | 1150 | 08-10 | FD176 | FD138 |
| STELVIO TT | 1150 | 09-10 | FD176 | FD138 |
| NORGE 1200 | 1200 | 06- | FD176 | FD186 |
| NORGE 1200 GT 8V | 1200 | 11- | FD176 | FD186 |
| SPORT 1200 | 1200 | 07-08 | FD176 | FD138 |
| SPORT 1200 V4 | 1200 | 09- | FD176 | FD138 |
| STELVIO | 1200 | 11- | FD176 | FD138 |
| STELVIO NTX | 1200 | 11-11 | FD176 | FD138 |
| AUDACE | 1400 | 15- | FD176 | FD138 |
| CALIFORNIA CUSTOM | 1400 | 13- | FD176 | FD138 |
| CALIFORNIA TOURING | 1400 | 13- | FD176 | FD138 |
| EL DORADO | 1400 | 15- | FD176 | FD138 |
| **MOTO MORINI** | | | | |
| 9 1/2 | 950 | 05- | FD176 | FD220 |
| CORSARIO 1200 | 1200 | 05- | FD176 | FD220 |
| CORSARIO AVIO 1200 | 1200 | 08- | FD176 | FD220 |
| MM3 | 1200 | 07- | FD176 | FD220 |
| **MV AGUSTA** | | | | |
| BRUTALE 675 | 675 | 12- | FD176 | FD220 |
| F3 675 | 675 | 11- | FD176 | FD220 |
| BRUTALE 800 | 800 | 13- | FD176 | FD220 |
| BRUTALE 800 RR | 800 | 15- | FD176 | FD220 |
| DRAGSTER 800 RR | 800 | 15- | FD176 | FD220 |
| BRUTALE 920 | 920 | 11- | FD176 | FD486 |
| BRUTALE 989 | 1000 | 08-09 | FD176 | FD486 |
| BRUTALE 990 R | 1000 | 10- | FD176 | FD486 |
| BRUTALE 1090 | 1078 | 13- | FD176 | FD220 |
| BRUTALE 1090 R | 1078 | 13- | FD176 | FD220 |
| **MZ/MuZ** | | | | |
| 1000 S | 1000 | 01- | FD176 | FD220 |
| **NORTON** | | | | |
| COMMANDO 961 SPORT | 961 | 10- | FD176 | FD220 |
| **POLARIS** | | | | |
| V 92 C | 1500 | 00- | FD176 | FD172 |
| V 92 SC | 1500 | 00- | FD176 | FD172 |
| **SUZUKI** | | | | |
| GSX 400 IMPULSE (Japan) | 400 | 99- | FD176 | FD045 |
| GSX 400 INAZUMA | 400 | 00- | FD176 | FD111 |
| GSX 1200 | 1200 | 99- | FD176 | FD111 |
| INAZUMA 1200 | 1200 | 98- | FD176 | FD111 |

| | | | | |
|---|---|---|---|---|
| **VICTORY** | | | | |
| CRUISER | 1500 | 01- | FD176 | FD172 |
| DE LUXE | 1500 | 01- | FD176 | FD172 |
| HAMMER / S | 1500 | 01-07 | FD176 | FD172 |
| SPORTCRUISER | 1500 | 01- | FD176 | FD172 |
| TOURING CRUISER | 1500 | 03- | FD176 | FD172 |
| VEGAS | 1500 | 03-07 | FD176 | FD172 |
| V92C | 1500 | 01- | FD176 | FD172 |
| **VOR** | | | | |
| RC 503 | 503 | 01- | FD176 | FD165 |
| **VOXAN** | | | | |
| CAFÉ RACER | 1000 | 99- | FD176 | FD220 |
| BOXER | 1000 | 00- | FD176 | FD220 |
| ROADSTER | 1000 | 99- | FD176 | FD220 |
| SCRAMBLER | 1000 | 00- | FD176 | FD165 |
| **YAMAHA** | | | | |
| FZ 400 FAZER | 400 | 01- | FD176 | FD057 |
| XJR 400 R | 400 | 97-00 | FD176 | FD057 |
| XT 660 X | 660 | 04- | FD176 | FD165 |
| TRX 850 | 850 | 95- | FD176 | FD057 |

**FD 177**

| mm | | | |
|---|---|---|---|
| ↔ | 76,5 x 41,3 | 8,2 | A / B |
| ↕ | 99,0 x 39,8 | 7,5 | A / B |

G1054

| BRAND MARCA | MODEL MODELO | C.C. | YEAR | FRONT | REAR |
|---|---|---|---|---|---|
| **KAWASAKI** | | | | | |
| EPSILON 150 | | 150 | 03- | FD177 | MF |
| **SUZUKI** | | | | | |
| AN VECSTAR | | 150 | 98- | FD177 | MF301 |
| AVENIS 150 | | 150 | 99- | FD177 | MF |
| EPICURO 150 | | 150 | 99- | FD177 | MF |

**FD 178**

| mm | | | |
|---|---|---|---|
| ↔ | 69,0 x 50,6 | 8,8 | A / A |

G1054 | G1370 | G1380 | G1375 | G1003-G1300

| BRAND MARCA | MODEL MODELO | C.C. | YEAR | FRONT | REAR |
|---|---|---|---|---|---|
| **YAMAHA** | | | | | |
| FZR 400 RR | | 400 | 90- | FD178 | FD069 |
| XJR 400 R | | 400 | 01- | FD178 | FD218 |
| XP 500 T-MAX | | 500 | 08- | FD178 | FD352 |
| XP 500 T-MAX ABS | | 500 | 08- | FD178 | FD352 |
| XP 530 T-MAX | | 530 | 12- | FD178 | FD260 |
| XP 530 T-MAX ABS | | 530 | 12- | FD178 | FD260 |
| FZS 600 FAZER | | 600 | 98-99 | FD178 | FD069 |
| FZS 600 S FAZER | | 600 | 00-03 | FD178 | FD069 |
| FZ 6 S2 | | 600 | 07- | FD178 | FD134 |
| FZ 6 FAZER S2 | | 600 | 07- | FD178 | FD134 |
| FZ 6 S2 ABS | | 600 | 07- | FD178 | FD134 |
| FZ 6 FAZER S2 ABS | | 600 | 07- | FD178 | FD134 |
| YZF 600 THUNDER CAT | | 600 | 96-00 | FD178 | FD057 |
| YZF 600 R-6 | | 600 | 99-02 | FD178 | FD214 |
| YZF 600 R-6 | | 600 | 03-04 | FD178 | FD134 |
| YZF 600 R-6 | | 600 | 05-05 | FD178 | FD134 |
| YZF 600 R-6 | | 600 | 06-07 | FD178 | FD134 |
| YZF 600 R-6 | | 600 | 08- | FD178 | FD134 |
| YZF 600 R-46 | | 600 | 05- | FD178 | FD134 |
| MT 07 | | 700 | 14- | FD178 | FD134 |
| MT 07 ABS | | 700 | 14- | FD178 | FD134 |
| MT 07 MOTOCAGE | | 700 | 15- | FD178 | FD134 |
| MT 07 MOTOCAGE ABS | | 700 | 15- | FD178 | FD134 |
| YZF-R7/OW02 | | 750 | 99- | FD178 | FD218 |
| FAZER 8 | | 800 | 10- | FD178 | FD134 |

| | | | | |
|---|---|---|---|---|
| FZ 8 | 800 | 10- | FD178 | FD134 |
| MT 09 | 850 | 13- | FD178 | FD134 |
| MT 09 ABS | 850 | 13- | FD178 | FD134 |
| MT 09 SPORTS TRACKER ABS | 850 | 14- | FD178 | FD134 |
| MT 09 STREET RALLY | 850 | 14- | FD178 | FD134 |
| MT 09 TRACER ABS | 850 | 15- | FD178 | FD134 |
| TDM 900 | 900 | 02-04 | FD178 | FD295 |
| TDM 900 A | 900 | 05- | FD178 | FD295 |
| FZ 1 (USA) | 1000 | 98-05 | FD178 | FD329 |
| FZ 1 / FAZER | 1000 | 06- | FD178 | FD134 |
| FZS 1000 FAZER | 1000 | 98-05 | FD178 | FD329 |
| YZF 1.000 THUNDER ACE | 1000 | 96-98 | FD178 | FD057 |
| YZF 1.000 R-1 | 1000 | 98-01 | FD178 | FD218 |
| YZF 1.000 R-1 | 1000 | 02-03 | FD178 | FD214 |
| YZF 1.000 R-1 | 1000 | 04-05 | FD178 | FD134 |
| YZF 1.000 R-1 | 1000 | 06-06 | FD178 | FD134 |
| YZF 1.000 R-1 SP | 1000 | 06-06 | FD178 | FD134 |
| YZF - R1 | 1000 | 15- | FD178 | FD363 |
| YZF - R1M | 1000 | 15- | FD178 | FD363 |
| BT 1100 BULL DOG | 1100 | 01- | FD178 | FD057 |
| XTZ 1200 SUPER TENERE | 1200 | 10- | FD178 | FD295 |
| XTZ 1200 SUPER TENERE ABS | 1200 | 10- | FD178 | FD295 |
| XTZ 1200 ZE SUPER TENERE ABS | 1200 | 14- | FD178 | FD295 |
| FJR 1300 | 1300 | 01-02 | FD178 | FD295 |
| FJR 1300 | 1300 | 03-05 | FD178 | FD295 |
| XJR 1300 | 1300 | 99-00 | FD178 | FD057 |
| XJR 1300 | 1300 | 01- | FD178 | FD329 |
| XJR 1300 RACER | 1300 | 15- | FD178 | FD329 |
| MT 01 | 1650 | 05-06 | FD178 | FD140 |
| XV 1700 ROAD STAR WARRIOR | 1700 | 02-07 | FD178 | FD295 |
| XV 1700 ROAD STAR WARRIOR | 1700 | 08- | FD178 | FD295 |
| XV STAR RAIDER | 1900 | 08- | FD178 | FD295 |
| XV 1900 STRATOLINER | 1900 | 06- | FD178 | FD295 |
| XVS 1900 MIDNIGHT STAR | 1900 | 06-12 | FD178 | FD295 |

**FD 179**

| | mm | A | B |
|---|---|---|---|
| | 109,0 x 44,0 | 8,4 | |
| | 131,9 x 37,2 | 8,4 | |

G1054 | G1370 | G1375 |

| BRAND MARCA | MODEL MODELO | C.C. | YEAR | FRONT | REAR |
|---|---|---|---|---|---|
| **KAWASAKI** | | | | | |
| KL 250 TR | | 250 | 04- | FD179 | MF |
| TR 250 | | 250 | 05- | FD179 | MF |
| ZR 250 BALIUS II | | 250 | 02- | FD179 | FD075 |
| ER-6 F / NINJA 650 R (USA) RIGHT / DER | | 650 | 05- | FD179 | FD167 |
| ER-6 N RIGHT / DER | | 650 | 05- | FD179 | FD167 |
| VERSYS 650 RIGHT / DER | | 650 | 06-07 | FD179 | FD167 |
| VERSYS 650 RIGHT / DER | | 650 | 08-09 | FD179 | FD167 |
| VERSYS 650 RIGHT / DER | | 650 | 10-14 | FD179 | FD167 |
| W 650 | | 650 | 99- | FD179 | MF |
| Z 750 RIGHT/DER | | 750 | 04-06 | FD179 | FD167 |
| Z 750 S RIGHT/DER | | 750 | 05-06 | FD179 | FD167 |
| ZR-7 S DER./RIGHT | | 750 | 99-04 | FD179 | |
| ZR-7 S IZQ/LEFT | | 750 | 99-04 | FD174 | FD179 |
| ZR-7 S DER./RIGHT | | 750 | 05- | FD179 | |
| ZR-7 S IZQ/LEFT | | 750 | 05- | FD174 | FD179 |
| VN 800 DRIFTER | | 800 | 99- | FD174 | FD179 |
| W 800 | | 800 | 11- | FD179 | MF |
| VN 900 | | 900 | 07- | FD174 | FD179 |
| VN 900 CLASIC | | 900 | 06- | FD174 | FD179 |
| VN 900 CLASIC SPECIAL EDITION | | 900 | 11- | FD174 | FD179 |
| KLV 1000 RIGHT/DER | | 1000 | 04- | FD179 | FD134 |
| GPZ 1100 (ZX1100E1) RIGHT/DER | | 1100 | 95- | FD179 | FD167 |
| ZEPHYR 1100 RIGHT/DER | | 1100 | 96- | FD179 | FD090 |
| VN 1500 DRIFTER | | 1500 | 02- | FD174 | FD179 |
| VN 1500 MEAN STREAK | | 1500 | 01- | FD156 | FD179 |
| VN-EASSIC Fi | | 1500 | 00- | FD174 | FD179 |
| VN-EASSIC TOURER RIGHT/DER | | 1500 | 98-99 | FD179 | FD062 |
| VN-TOURER RIGHT/DER | | 1500 | 03- | FD179 | FD179 |
| VN 1600 MEAN STREAK | | 1600 | 04-04 | FD156 | FD179 |
| VN 1600 MEAN STREAK | | 1600 | 05- | FD290 | FD179 |
| VN 1600 SUMO/EASSIC RIGHT/DER | | 1600 | 03- | FD179 | FD062 |
| VN 1600 NOMAD RIGHT/DER | | 1600 | 05- | FD179 | FD179 |
| VN 1700 CLASSIC RIGHT/DER | | 1700 | 09- | FD179 | FD179 |
| VN 1700 CLASSIC TOURER RIGHT/DER | | 1700 | 09- | FD179 | FD179 |
| VN 1700 VOYAGER | | 1700 | 09- | FD107 | FD179 |
| VN 1700 VOYAGER CUSTOM ABS | | 1700 | 11- | FD107 | FD179 |
| VN 2000 | | 2000 | 04- | FD107 | FD179 |
| **KAWASAKI INDONESIA** | | | | | |
| ER-6 N RIGHT / DER | | 650 | 09- | FD179 | FD167 |
| **KAWASAKI MALASIA** | | | | | |
| ER-6 F / RIGHT / DER | | 650 | 05- | FD179 | FD167 |
| ER-6 N RIGHT / DER | | 650 | 05- | FD179 | FD167 |
| VERSYS 650 RIGHT / DER | | 650 | 10- | FD179 | FD167 |
| **SUZUKI** | | | | | |
| RV 200 VAN VAN | | 200 | 03- | FD179 | MF |
| GSX 250 FX | | 250 | 02- | FD179 | FD167 |
| BOULEVARD 400 | | 400 | 05- | FD179 | MF |
| SFV 400 GLADIUS RIGHT/DER | | 400 | 10- | FD179 | FD103 |
| SV 400 /S DER. | | 400 | 99- | FD179 | |
| GS 500 E | | 500 | 96- | FD179 | FD111 |
| GS 500 F | | 500 | 06- | FD179 | FD111 |
| GSF 600 N BANDIT DER. | | 600 | 00- | FD179 | |
| GSX 600 F DER. (KATANA 600 USA) | | 600 | 98-03 | FD179 | |
| GSX 600 F DER. (KATANA 600 USA) | | 600 | 04- | FD179 | |
| DL 650 V-STORM DER. | | 650 | 04-06 | FD179 | |
| DL 650 V-STORM DER. | | 650 | 07- | FD179 | |
| DL 650 V-STORM DER./ABS | | 650 | 07- | FD179 | |
| DL 650 V-STORM XPEDITION DER. | | 650 | 11- | FD179 | |
| DL 650 V-STORM XPEDITION DER./ABS | | 650 | 11-12 | FD179 | |
| DL 650 V-STORM XPEDITION DER./ABS | | 650 | 13-13 | FD179 | |
| DL 650 V-STORM XT DER./ABS | | 650 | 15- | FD179 | |
| GSF 650 BANDIT /S DER. | | 650 | 05-05 | FD179 | |
| GSF 650 BANDIT /S/ ABS DER. | | 650 | 06- | FD179 | |
| SFV 650 GLADIUS RIGHT/DER | | 650 | 09- | FD179 | FD457 |
| SFV 650 GLADIUS ABS RIGHT/DER | | 650 | 10- | FD179 | FD457 |
| SV 650 /S DER. | | 650 | 99-02 | FD179 | |
| SV 650 /S DER. | | 650 | 03-03 | FD179 | |
| SV 650 /S DER. | | 650 | 04-06 | FD179 | |
| SV 650 ABS DER. | | 650 | 07- | FD179 | |
| XF 650 FREEWIND | | 650 | 97- | FD179 | FD103 |
| GSR 750 RIGHT/DER | | 750 | 11- | FD179 | FD134 |
| GSR 750 ABS RIGHT/DER | | 750 | 11- | FD179 | FD134 |
| GSX 750 F DER. | | 750 | 98- | FD179 | |
| GSX 750 F VS DER. (KATANA 750 USA) | | 750 | 99-02 | FD179 | |
| GSX 750 F IZQ | | 750 | 03- | FD179 | FD111 |
| BOULEVARD 800 | | 800 | 05- | FD179 | MF |
| VL 800 VOLUSIA | | 800 | 01- | FD179 | MF |
| VS INTRUDER M 800 | | 800 | 05- | FD179 | MF |
| VZ 800 MARAUDER | | 800 | 97- | FD179 | MF304 |
| DL 1000 V-STORM DER. | | 1000 | 01-13 | FD179 | |
| M 1500 RIGHT/DER | | 1500 | 09- | FD179 | FD179 |
| VL 1500 INTRUDER RIGHT/DER | | 1500 | 02- | FD179 | FD107 |
| VL 1500 INTRUDER T | | 1500 | 13- | FD140 | FD179 |
| VZ 1600 | | 1600 | 04- | FD156 | FD179 |
| VZ 1600 INTRUDER | | 1600 | 05- | FD290 | FD179 |
| M 109 R BOULEVARD | | 1800 | 06- | FD325 | FD179 |
| M 1800 RB | | 1800 | 14- | FD325 | FD179 |
| VL 1800 VOLUSIA | | 1800 | 02- | FD179 | MF |
| VZR 1800 INTRUDER | | 1800 | 08- | FD325 | FD179 |

**FD 181**

| | mm | A | A |
|---|---|---|---|
| | 35,0 x 29,0 | 8,3 | |

G1054 | G1805 |

| BRAND MARCA | MODEL MODELO | C.C. | YEAR | FRONT | REAR |
|---|---|---|---|---|---|
| **BREMBO RACING** | | | | | |
| X206001 | | | - | | FD181 |

**FD 186**

| | mm | A | B |
|---|---|---|---|
| | 94,0 x 36,7 | 9,3 | |
| | 94,0 x 32,5 | 9,3 | |

G1054 | G1371 |

| BRAND MARCA | MODEL MODELO | C.C. | YEAR | FRONT | REAR |
|---|---|---|---|---|---|
| **APRILIA** | | | | | |
| CAPONORD RAID | | 1000 | 03- | FD172 | FD186 |
| **BMW** | | | | | |
| R 850 R | | 850 | 04- | FD272 | FD186 |
| R 850 R ROADSTER | | 850 | 95-00 | FD198 | FD186 |
| R 850 R ROADSTER | | 850 | 01- | FD271 | FD186 |
| R 850 RT | | 850 | 06- | FD271 | FD186 |
| R 100 GS/ABS, R, RS | | 1000 | 95- | FD198 | FD186 |
| R 100 R CLASSIC, MYSTIC | | 1000 | 95- | FD198 | FD186 |
| R 1100 GS ABS | | 1100 | 94- | FD198 | FD186 |
| R 1100 GS NO ABS | | 1100 | 94- | FD198 | FD186 |
| R 1100 R ROADSTER | | 1100 | 95- | FD198 | FD186 |
| R 1100 RS NO ABS | | 1100 | 95- | FD198 | FD186 |
| R 1100 RT ABS | | 1100 | 94-01 | FD198 | FD186 |
| R 1100 RT NO ABS | | 1100 | 94-01 | FD198 | FD186 |
| R 1100 S NO ABS | | 1100 | 98-00 | FD198 | FD186 |
| R 1100 S | | 1100 | 01- | FD271 | FD186 |
| R 1100 S ABS | | 1100 | 01- | FD272 | FD186 |
| HP 2 ENDURO | | 1150 | 05- | FD172 | FD186 |
| HP 2 SM | | 1150 | 06-06 | FD172 | FD186 |
| HP 2 SPORT | | 1150 | 08- | FD373 | FD186 |
| HP 2 MEGAMOTO | | 1150 | 07- | FD271 | FD186 |
| R 1150 GS ABS | | 1150 | 00-01 | FD198 | FD186 |
| R 1150 GS | | 1150 | 02- | FD271 | FD186 |
| R 1150 GS ADVENTURE | | 1150 | 03- | FD272 | FD186 |
| R 1150 R ROCKESTER | | 1150 | 03- | FD272 | FD186 |
| R 1150 R ROADSTER | | 1150 | 01- | FD272 | FD186 |
| R 1150 RS | | 1150 | 01- | FD272 | FD186 |
| R 1150 RT | | 1150 | 01- | FD271 | FD186 |
| K 1200 RS ABS | | 1200 | 97-00 | FD198 | FD186 |
| K 1200 R | | 1200 | 05- | FD272 | FD186 |
| K 1200 R SPORT | | 1200 | 07- | FD272 | FD186 |
| K 1200 RT | | 1200 | 06- | FD271 | FD186 |
| K 1200 S | | 1200 | 04- | FD271 | FD186 |
| K 1200 ST | | 1200 | 06-08 | FD271 | FD186 |
| K 1200 ST | | 1200 | 09- | FD271 | FD186 |
| R 1200 CRUISER | | 1200 | 97- | FD198 | FD186 |
| R 1200 C AVANTGARDE | | 1200 | 00- | FD198 | FD186 |
| R 1200 C INDEPENDENT | | 1200 | 01- | FD198 | FD186 |
| R 1200 C MONTAUK | | 1200 | 04- | FD272 | FD186 |
| R 1200 GS | | 1200 | 04-08 | FD271 | FD186 |
| R 1200 GS | | 1200 | 09- | FD271 | FD186 |
| R 1200 GS ADVENTURE | | 1200 | 06-08 | FD271 | FD186 |
| R 1200 GS ADVENTURE | | 1200 | 09- | FD271 | FD186 |
| R 1200 R | | 1200 | 06-08 | FD272 | FD186 |
| R 1200 R | | 1200 | 09-14 | FD272 | FD186 |
| R 1200 R | | 1200 | 15- | FD475 | FD186 |
| R 1200 R NINE T | | 1200 | 14- | FD475 | FD186 |
| R 1200 RT | | 1200 | 05- | FD271 | FD186 |
| R 1200 RT SE | | 1200 | 10- | FD271 | FD186 |
| R 1200 S | | 1200 | 06-08 | FD271 | FD186 |
| R 1200 S | | 1200 | 09- | FD271 | FD186 |
| R 1200 ST | | 1200 | 05-08 | FD271 | FD186 |
| R 1200 ST | | 1200 | 09- | FD271 | FD186 |
| K 1300 GT | | 1300 | 09- | FD271 | FD186 |
| K 1300 R | | 1300 | 09- | FD272 | FD186 |
| K 1300 S | | 1300 | 09- | FD271 | FD186 |
| K 1300 S MOTOR SPORT | | 1300 | 15- | FD475 | FD186 |
| **MOTO GUZZI** | | | | | |
| NORGE 1200 | | 1200 | 06- | FD176 | FD186 |
| NORGE 1200 GT 8V | | 1200 | 11- | FD176 | FD186 |



For other models years previous to 1990 visit **www.galferonline.es** - Para otros modelos anteriores al año 1990 visitar **www.galferonline.es**
For consult TÜV (ABE) type approvals visit **www.galfermoto.com --> DOWNLOAD --> TÜV CERTIFICATIONS** - Para consultar las homologaciones TÜV (ABE) visitar **www.galfermoto.com --> DESCARGAS --> CERTIFICACIONES TÜV**

## FD 187

mm 77,4 x 42,3 | 9,0 | A | B

mm 98,8 x 42,3 | 9,0 | A | B

G1054 | G1380

| BRAND MARCA | MODEL MODELO | C.C. | YEAR | FRONT | REAR |
|---|---|---|---|---|---|
| **AEON** | | | | | |
| ELITE 200i | | 200 | 11- | FD187 | FD094 |
| URBAN 350i | | 350 | 11- | FD187 | FD094 |
| **BENELLI** | | | | | |
| HOBBY 150 | | 150 | 13- | FD187 | FD187 |
| MACIS 150 | | 150 | 10- | FD187 | FD187 |
| CAFFE NERO DER. | | 250 | 08- | FD187 | FD315 |
| **CFMOTO** | | | | | |
| E-CHARM | | 150 | 10- | FD187 | FD079 |
| GLORY | | 150 | 10- | FD187 | FD200 |
| JET MAX IZQ/LEFT | | 250 | 10- | FD187 | FD200 |
| **HONDA** | | | | | |
| CMX REBEL 250 (NISSIN) | | 250 | 96-97 | FD187 | MF005 |
| CMX REBEL 250 (NISSIN) | | 250 | 98- | FD187 | MF005 |
| **KEEWAY** | | | | | |
| OUTLOOK 150 | | 150 | 07- | FD187 | FD187 |
| **KYMCO** | | | | | |
| MOVIE XL 150 | | 150 | 01- | FD187 | MF740 |
| LIKE | | 200 | 09- | FD187 | FD145 |
| PEOPLE S IZQ./LEFT | | 250 | 06- | FD187 | FD474 |
| PEOPLE 300 LEFT/IZQ. | | 300 | 08- | FD187 | FD214 |
| **PEUGEOT** | | | | | |
| GEO 250 RS | | 250 | 10- | FD187 | FD270 |
| SATELIS 250 RS | | 250 | 10- | FD187 | FD187 |
| GEO STYLE 300 | | 300 | 10- | FD187 | FD187 |
| GEOPOLIS 300 | | 300 | 11- | FD187 | FD187 |
| SATELIS 300i | | 300 | 13- | FD187 | FD187 |
| GEO 400 RS | | 400 | 10- | FD140 | FD187 |
| GEOPOLIS 400 | | 400 | 07- | FD187 | FD187 |
| SATELIS 500 | | 500 | 10- | FD140 | FD187 |
| **ROYAL ENFIELD** | | | | | |
| BULLET CLASIC | | 500 | 09- | FD187 | MF |
| CLUBMAN | | 500 | 09- | FD187 | MF |
| EFI | | 500 | 09- | FD187 | MF |
| EFI DE LUXE | | 500 | 09- | FD187 | MF |
| KIT ES | | 500 | 09- | FD187 | MF |
| TRAIL | | 500 | 09- | FD187 | MF |
| **SUZUKI** | | | | | |
| AN 250 BURGMAN / SKY WAVE IZQ. | | 250 | 07-08 | FD187 | FD400 |
| AN 400 BURGMAN IZQ./LEFT | | 400 | 06- | FD187 | |
| AN 400 SKY WAVE IZQ./LEFT | | 400 | 07- | FD187 | |

## FD 188

mm 70,2 x 41,1 | 8,0 | A | B

mm 85,1 x 44,3 | 8,0 | A | B

G1054 | G1380

| BRAND MARCA | MODEL MODELO | C.C. | YEAR | FRONT | REAR |
|---|---|---|---|---|---|
| **JINCHENG** | | | | | |
| JC 250 6 | | 250 | 05- | FD188 | MF |
| **P.G.O.** | | | | | |
| LIBRA 150 | | 150 | 09- | FD188 | MF |
| T-REX 150 4-T | | 150 | 01- | FD188 | MF |
| **PEUGEOT** | | | | | |
| TWEET 150 | | 150 | 10- | FD188 | FD200 |
| LXR 200 | | 200 | 10- | FD188 | FD399 |
| **SYM** | | | | | |
| H 200 SE | | 200 | 06- | FD188 | FD399 |
| HD 200 S EVO | | 200 | 06- | FD188 | FD399 |
| **TGB** | | | | | |
| PLATFORM 150 | | 150 | 06- | FD188 | MF |
| 101 | | 150 | 05- | FD188 | MF453 |

## FD 189

mm 52,6 x 56,2 | 8,6 | A | A

G1054

| BRAND MARCA | MODEL MODELO | C.C. | YEAR | FRONT | REAR |
|---|---|---|---|---|---|
| **SUZUKI** | | | | | |
| RF 900 R | | 900 | 94-95 | FD099 | FD189 |
| RF 900 RS2 | | 900 | 96- | FD099 | FD189 |

## FD 193

mm 92,0 x 51,5 | 9,5 | A | A

G1054 | G1375

| BRAND MARCA | MODEL MODELO | C.C. | YEAR | FRONT | REAR |
|---|---|---|---|---|---|
| **HONDA** | | | | | |
| CB 1300 | | 1300 | 98-00 | FD193 | FD267 |
| **KAWASAKI** | | | | | |
| ZX 7 RR (ZX750P1) | | 750 | 96- | FD193 | FD267 |
| **YAMAHA** | | | | | |
| YZF-R7/OW02 RACE | | 750 | 99- | FD193 | FD163 |

## FD 195

mm 79,0 x 47,1 | 7,5 | A | A

G1054

| BRAND MARCA | MODEL MODELO | C.C. | YEAR | FRONT | REAR |
|---|---|---|---|---|---|
| **APRILIA** | | | | | |
| MANA X / ABS | | 850 | 10- | FD367 | FD195 |
| **HONDA** | | | | | |
| CMX REBEL 250 (GRIMECA) | | 250 | 00-07 | FD195 | MF005 |

## FD 198

mm 100,0 x 56,0 | 8,5 | A | A

G1054 | G1370

| BRAND MARCA | MODEL MODELO | C.C. | YEAR | FRONT | REAR |
|---|---|---|---|---|---|
| **BMW** | | | | | |
| R 80 R | | 800 | 94- | FD198 | MF616 |
| R 80 R ROADSTER | | 800 | 93- | FD198 | MF |
| R 850 R ROADSTER | | 850 | 95-00 | FD198 | FD186 |
| R 100 GS, R | | 1000 | 93-94 | FD198 | FD013 |
| R 100 GS/ABS, R, RS | | 1000 | 95- | FD198 | FD186 |
| R 100 R CLASSIC, MYSTIC | | 1000 | 95- | FD198 | FD186 |
| R 100 ROADSTER | | 1000 | 93- | FD198 | MF616 |
| K 1100 RS ABS | | 1100 | 93- | FD198 | FD013 |
| K 1100 LT SPECIAL EDITION | | 1100 | 95- | FD198 | FD044 |
| K 1100 LT (ABS) | | 1100 | 93-94 | FD198 | FD013 |
| R 1100 GS ABS | | 1100 | 94- | FD198 | FD186 |
| R 1100 GS NO ABS | | 1100 | 94- | FD198 | FD186 |
| R 1100 LT | | 1100 | 95- | FD198 | FD013 |
| R 1100 R ROADSTER | | 1100 | 95- | FD198 | FD186 |
| R 1100 RS | | 1100 | 93-94 | FD198 | FD013 |
| R 1100 RS NO ABS | | 1100 | 95- | FD198 | FD186 |
| R 1100 RT ABS | | 1100 | 94-01 | FD198 | FD186 |
| R 1100 RT NO ABS | | 1100 | 94-01 | FD198 | FD186 |
| R 1100 S NO ABS | | 1100 | 98-00 | FD198 | FD186 |
| R 1150 GS ABS | | 1150 | 00-01 | FD198 | FD186 |
| K 1200 LT | | 1200 | 97-00 | FD198 | FD251 |
| K 1200 RS ABS | | 1200 | 97-00 | FD198 | FD186 |
| R 1200 CRUISER | | 1200 | 97- | FD198 | FD186 |
| R 1200 C AVANTGARDE | | 1200 | 00- | FD198 | FD186 |
| R 1200 C INDEPENDENT | | 1200 | 01- | FD198 | FD186 |

## FD 200

mm 35,6 x 49,0 | 7,0 | A | A

G1054 | G1380

| BRAND MARCA | MODEL MODELO | C.C. | YEAR | FRONT | REAR |
|---|---|---|---|---|---|
| **CFMOTO** | | | | | |
| GLORY | | 150 | 10- | FD187 | FD200 |
| JET MAX IZQ/LEFT | | 250 | 10- | FD187 | FD200 |
| **GILERA-PIAGGIO** | | | | | |
| RUNNER 180 SP | | 180 | 99-00 | FD162 | FD200 |
| FUOCO 500 i.e. | | 500 | 07- | FD200 | FD277 |
| **LML** | | | | | |
| STAR 2T (TODAS) | | 150 | 10- | FD200 | MF601 |
| STAR GT 2T | | 150 | 10- | FD200 | MF601 |
| STAR 4T (TODAS) | | 151 | 10- | FD200 | MF601 |
| STAR GT 4T | | 151 | 10- | FD200 | MF601 |
| STAR RS 4T | | 151 | 10- | FD200 | MF601 |
| STAR MAT SERIES 4T | | 151 | 10- | FD200 | MF601 |
| STAR BICOLOR VINTAGE 4T | | 151 | 10- | FD200 | MF601 |
| STAR CORSA 4T | | 165 | 10- | FD200 | MF601 |
| STAR 4T (TODAS) | | 200 | 12- | FD200 | MF601 |
| STAR ART (TODAS) | | 200 | 12- | FD200 | MF601 |
| STAR GT (TODAS) | | 200 | 12- | FD200 | MF601 |
| STAR URBAN (TODAS) | | 200 | 12- | FD200 | MF601 |
| STAR RS/SPORT | | 200 | 12- | FD200 | MF601 |
| STAR OFF ROAD | | 200 | 12- | FD200 | MF601 |
| **PEUGEOT** | | | | | |
| TWEET 150 | | 150 | 10- | FD188 | FD200 |
| SATELIS 250 CITY | | 250 | 06- | FD220 | FD200 |
| **PIAGGIO** | | | | | |
| LIBERTY 4-T | | 150 | 00- | FD200 | MF |
| VESPA ET4 | | 150 | 01- | FD200 | MF636 |
| VESPA S 150 | | 150 | 09- | FD200 | MF |
| VESPA SUPER SPORT ABS | | 150 | 15- | FD277 | FD200 |
| LIBERTY | | 200 | 04- | FD200 | MF |
| MP 3 250 | | 250 | 06-08 | FD200 | FD343 |
| MP 3 250 LT | | 250 | 09- | FD200 | FD334 |
| MP 3 300 LT SPORT | | 300 | 11- | FD200 | FD334 |
| MP 3 300 YOURBAN | | 300 | 11- | FD200 | FD334 |
| MP 3 300 ie YOURBAN | | 300 | 13- | FD200 | FD334 |
| MP 3 400 LT | | 400 | 09- | FD200 | FD277 |
| MP 3 500 SPORT | | 500 | 10- | FD200 | FD277 |
| **RENAULT** | | | | | |
| FULLTIME | | 150 | 02- | FD153 | FD200 |
| KOURANOS | | 250 | 02- | FD153 | FD200 |

## FD 204

mm 94,1 x 35,7 | 7,4 | A | B

mm 120,0 x 26,5 | 7,0 | A | B

G1054 | G1396

| BRAND MARCA | MODEL MODELO | C.C. | YEAR | FRONT | REAR |
|---|---|---|---|---|---|
| **KAWASAKI** | | | | | |
| KL 250 SUPER SHERPA | | 250 | 00- | FD204 | FD075 |

## FD 205

mm 115,0 x 41,1 | 7,5 | A | A1

G1054 | G1375 | G1380

| BRAND MARCA | MODEL MODELO | C.C. | YEAR | FRONT | REAR |
|---|---|---|---|---|---|
| **HONDA** | | | | | |
| NTV 650 V DEAUVILLE | | 650 | 02- | FD205 | FD207 |
| VFR 800 | | 800 | 98-00 | FD205 | FD207 |
| VFR 800 Vtec (INTERCEPTOR USA) | | 800 | 01-05 | FD205 | FD207 |
| VARADERO | | 1000 | 99-02 | FD205 | FD207 |
| VARADERO | | 1000 | 03- | FD205 | FD207 |
| CB 1100 X 11 ELEVEN | | 1100 | 00- | FD205 | FD207 |
| CBR 1100 XX SUP.BLACKBIRD | | 1100 | 97-99 | FD205 | FD207 |
| CBR 1100 XX i SUP.BLACKBIRD | | 1100 | 00- | FD205 | FD207 |
| ST 1100 PAN EUROPEAN | | 1100 | 96-01 | FD205 | FD207 |
| ST 1100 PAN EUROPEAN CBS/ABS/TCS | | 1100 | 96-01 | FD205 | FD207 |
| ST 1300 PAN-EUROPEAN | | 1300 | 02-07 | FD205 | FD207 |
| VT 1300 CS ABS | | 1300 | 10- | FD344 | FD205 |
| VT 1300 CX ABS | | 1300 | 10- | FD344 | FD205 |
| GL 1800 GOLD WING | | 1800 | 01-05 | FD205 | FD207 |
| GL 1800 GOLD WING | | 1800 | 06- | FD205 | FD207 |
| NRX 1800 VALKYRIE RUNE | | 1800 | 03- | FD205 | FD207 |
| VTX 1800 C | | 1800 | 01- | FD205 | FD207 |
| VTX 1800 RETRO | | 1800 | 03- | FD205 | FD207 |
| **VICTORY** | | | | | |
| VISION 8 BALL | | 1500 | 10- | FD205 | FD140 |

## FD 207

mm 115,0 x 41,1 | 9,4 | A | A1

G1054 | G1370 | G1380

| BRAND MARCA | MODEL MODELO | C.C. | YEAR | FRONT | REAR |
|---|---|---|---|---|---|
| **HONDA** | | | | | |
| PANTHEON 150 | | 150 | 98-02 | FD207 | MF044 |
| PANTHEON 150 | | 150 | 03- | FD207 | FD103 |
| FES 250 FORESIGHT | | 250 | 97-01 | FD207 | MF044 |
| FES 250 FORESIGHT DD | | 250 | 00- | FD207 | FD103 |
| FES 250 FORZA, REFLEX | | 250 | 00-04 | FD207 | FD103 |
| FES 250 JAZZ /ABS | | 250 | 00-04 | FD207 | FD103 |
| PS 250 | | 250 | 04- | FD207 | MF044 |
| FJS 400 SILVER WING | | 400 | 06- | FD207 | FD140 |
| SILVER WING 400 | | 400 | 02-08 | FD207 | FD140 |
| FJS 600 SILVER WING | | 600 | 01- | FD207 | FD140 |
| FJS 600 SILVER WING ABS | | 600 | 03- | FD207 | FD140 |
| NTV 650 V DEAUVILLE | | 650 | 02- | FD205 | FD207 |
| NTV 700 V DEAUVILLE | | 700 | 06- | FD344 | FD207 |
| VFR 800 | | 800 | 98-00 | FD205 | FD207 |
| VFR 800 Vtec (INTERCEPTOR USA) | | 800 | 01-05 | FD205 | FD207 |
| VFR 800 | | 800 | 06- | FD344 | FD207 |
| VFR 800 ABS | | 800 | 06-13 | FD344 | FD207 |
| VARADERO | | 1000 | 99-02 | FD205 | FD207 |
| VARADERO | | 1000 | 03- | FD205 | FD207 |
| VARADERO ABS | | 1000 | 04- | FD344 | FD207 |
| CB 1100 X 11 ELEVEN | | 1100 | 00- | FD205 | FD207 |
| CBR 1100 XX SUP.BLACKBIRD | | 1100 | 97-99 | FD205 | FD207 |
| CBR 1100 XX i SUP.BLACKBIRD | | 1100 | 00- | FD205 | FD207 |
| ST 1100 PAN EUROPEAN | | 1100 | 96-01 | FD205 | FD207 |
| ST 1100 PAN EUROPEAN CBS/ABS/TCS | | 1100 | 96-01 | FD205 | FD207 |
| CTX 1300 C ABS | | 1300 | 14- | FD344 | FD207 |
| ST 1300 PAN-EUROPEAN | | 1300 | 02-07 | FD205 | FD207 |
| ST 1300 PAN-EUROPEAN ABS | | 1300 | 08- | FD344 | FD207 |
| GL 1800 GOLD WING | | 1800 | 01-05 | FD205 | FD207 |
| GL 1800 GOLD WING | | 1800 | 06- | FD205 | FD207 |
| NRX 1800 VALKYRIE RUNE | | 1800 | 03- | FD205 | FD207 |
| VTX 1800 C | | 1800 | 01- | FD205 | FD207 |
| VTX 1800 RETRO | | 1800 | 03- | FD205 | FD207 |
| **PEUGEOT** | | | | | |
| SV 250 | | 250 | 01-02 | FD207 | MF044 |
| SV 250 | | 250 | 03- | FD207 | FD134 |

## FD 208

mm 77,4 x 42,8 | 10,0 | A | A

G1300

| BRAND MARCA | MODEL MODELO | C.C. | YEAR | FRONT | REAR |
|---|---|---|---|---|---|
| **BREMBO RACING** | | | | | |
| X10117** | | | - | FD208 | |
| X9737** | | | - | FD208 | |
| XA762** | | | - | FD208 | |
| XA933** | | | - | FD208 | |

## FD 209

mm 77,0 x 54,0 | 7,0 | A | A

G1054

| BRAND MARCA | MODEL MODELO | C.C. | YEAR | FRONT | REAR |
|---|---|---|---|---|---|
| **SUZUKI** | | | | | |
| GZ 250 MARAUDER | | 250 | 98-07 | FD209 | MF |
| GZ 250 MARAUDER | | 250 | 08- | FD209 | MF |
| INTRUDER LC 250 | | 250 | 00- | FD209 | MF |
| TU 250 X | | 250 | 97-01 | FD209 | MF151 |
| VL 250 MARAUDER | | 250 | 00- | FD209 | MF |
| LS 650 SAVAGE | | 650 | 90-91 | FD209 | MF303 |
| LS 650 P | | 650 | 92-04 | FD209 | MF303 |
| LS 650 (S40 BOULEVAR USA) | | 650 | 05-08 | FD209 | MF303 |
| LS 650 (S40 BOULEVAR USA) | | 650 | 09- | FD209 | MF303 |

## FD 214

mm 99,8 x 31,0 | 8,0 | A | A

G1054 | G1371 | G1380

| BRAND MARCA | MODEL MODELO | C.C. | YEAR | FRONT | REAR |
|---|---|---|---|---|---|
| **BENELLI** | | | | | |
| BN 302 | | 300 | 14- | FD176 | FD214 |
| **ITALJET** | | | | | |
| JUPITER | | 250 | 02- | FD169 | FD214 |
| **KYMCO** | | | | | |
| PEOPLE 300 LEFT/IZQ. | | 300 | 08- | FD187 | FD214 |
| **LINHAI** | | | | | |
| MONARCH | | 160 | 04- | FD169 | FD214 |
| MAIN STR. 260 | | 260 | 04- | FD169 | FD214 |
| **MBK MOTOBEKANE** | | | | | |
| SKYLINER | | 250 | 00- | FD169 | FD214 |
| **MINELLI** | | | | | |
| OMEGA 250 | | 250 | 06- | FD169 | FD214 |
| **SUMCO** | | | | | |
| MS 150 | | 150 | 06- | FD169 | FD214 |
| **YAMAHA** | | | | | |
| TW 200 | | 200 | 98- | FD214 | MF640 |
| XT 225 | | 225 | 01- | FD214 | MF |
| SEROW 250 | | 250 | 04- | FD214 | FD114 |
| SP 250 DX MAGESTY | | 250 | 98-99 | FD169 | FD214 |
| SP 250 DX MAGESTY | | 250 | 00- | FD169 | FD214 |
| X - CITY | | 250 | 07- | FD140 | FD214 |
| X - MAX 250 | | 250 | 05-09 | FD355 | FD214 |
| X - MAX 250 | | 250 | 10- | FD266 | FD214 |
| XG 250 TRICKER | | 250 | 04- | FD214 | FD114 |
| XT 250 X | | 250 | 06- | FD214 | FD114 |
| YZF 600 R-6 | | 600 | 99-02 | FD178 | FD214 |
| YZF 1.000 R-1 | | 1000 | 02-03 | FD178 | FD214 |
| **YAMAHA INDONESIA** | | | | | |
| RX - KING RXK 135 | | 135 | 02- | FD214 | MF |
| SCORPIO SX 4 | | 223 | 01- | FD214 | MF |
| SCORPIO Z SX | | 223 | 12- | FD214 | MF |
| SCORPIO Z SX 4 | | 223 | 05- | FD214 | MF |
| **YAMAHA MALASIA** | | | | | |
| 135 LC ES | | 135 | 11- | FD214 | MF |

## FD 218

mm 51,9 x 59,8 | 8,8 | A | A

G1054

| BRAND MARCA | MODEL MODELO | C.C. | YEAR | FRONT | REAR |
|---|---|---|---|---|---|
| **YAMAHA** | | | | | |
| XJR 400 R | | 400 | 01- | FD178 | FD218 |
| YZF-R7/OW02 | | 750 | 99- | FD178 | FD218 |
| YZF 1.000 R-1 | | 1000 | 98-01 | FD178 | FD218 |

## FD 219

mm 75,0 x 55,3 | 8,3 | A | A

G1054 | G1370 | G1375 | G1003 | G1300

| BRAND MARCA | MODEL MODELO | C.C. | YEAR | FRONT | REAR |
|---|---|---|---|---|---|
| **HARLEY DAVIDSON** | | | | | |
| XR 1200 | | 1200 | 08-10 | FD219 | FD340 |
| XR 1200 R | | 1200 | 10- | FD219 | FD340 |
| XR 1200 X | | 1200 | 10- | FD219 | FD340 |
| **HONDA** | | | | | |
| CB 400 SB | | 400 | 05- | FD219 | FD134 |
| CB 400 SUPER BOL D'OR | | 400 | 05- | FD219 | FD134 |
| CB 400 SUPER FOUR | | 400 | 05- | FD219 | FD134 |
| CB 400 SF | | 400 | 02-04 | FD219 | FD267 |
| CBR 600 F4 | | 600 | 99-00 | FD219 | FD134 |
| CBR 600 F4 i SPORT | | 600 | 01-10 | FD219 | FD134 |
| CBR 600 RR | | 600 | 03-04 | FD219 | FD134 |
| CBR 900 RR | | 900 | 98-99 | FD219 | FD134 |
| CBR 900 RR (929) | | 929 | 00-01 | FD219 | FD134 |
| CBR 900 RR (954) | | 954 | 02- | FD219 | FD134 |
| VTR 1000 SP-1 | | 1000 | 00-01 | FD219 | FD134 |
| VTR 1000 SP-2 | | 1000 | 02- | FD219 | FD134 |
| RVT 1000 RC 51 (USA) | | 1000 | 02- | FD219 | FD134 |
| CB 1100 | | 1100 | 10-12 | FD219 | FD134 |
| CB 1100 EX | | 1100 | 15- | FD219 | FD134 |
| CB 1300 | | 1300 | 01-02 | FD219 | FD267 |
| CB 1300 | | 1300 | 03-04 | FD219 | FD134 |
| CB 1300 S | | 1300 | 05-09 | FD219 | FD134 |
| CB 1300 SUPER BOL D'OR / ABS | | 1300 | 05- | FD219 | FD134 |
| CB 1300 SUPER FOUR / ABS | | 1300 | 05- | FD219 | FD134 |
| **KAWASAKI** | | | | | |
| ZX-6R 636 | | 636 | 13- | FD219 | FD363 |
| ZX-6R 636 ABS | | 636 | 13- | FD219 | FD363 |

## FD 220

mm 50,8 x 53,9 | 8,0 | A | A

G1054 | G1371 | G1380

| BRAND MARCA | MODEL MODELO | C.C. | YEAR | FRONT | REAR |
|---|---|---|---|---|---|
| **ADIVA** | | | | | |
| AD 250 | | 250 | 09- | FD220 | FD220 |
| AD 400 | | 400 | 09- | FD220 | FD220 |
| **APRILIA** | | | | | |
| BLUE MARLIN | | 1000 | 02- | FD176 | FD220 |
| ETV CAPONORD | | 1000 | 01- | FD172 | FD220 |
| RSV4 FACTORY | | 1000 | 09- | FD373 | FD220 |
| RSV4 R | | 1000 | 09-14 | FD373 | FD220 |
| RSV4 RR | | 1000 | 15- | FD373 | FD220 |
| RSV MILLE | | 1000 | 98-00 | FD176 | FD220 |
| RSV MILLE | | 1000 | 01- | FD262 | FD220 |
| RSV MILLE R | | 1000 | 00-00 | FD176 | FD220 |



For other models years previous to 1990 visit **www.galferonline.es** · Para otros modelos anteriores al año 1990 visitar **www.galferonline.es**

For consult TÜV (ABE) type approvals visit **www.galfermoto.com --> DOWNLOAD --> TÜV CERTIFICATIONS** · Para consultar las homologaciones TÜV (ABE) visitar **www.galfermoto.com --> DESCARGAS --> CERTIFICACIONES TÜV**

| | | | | |
|---|---|---|---|---|
| RSV MILLE R | 1000 | 01- | FD262 | FD220 |
| RSV MILLE SP | 1000 | 00- | FD176 | FD220 |
| RSV TUONO | 1000 | 02-05 | FD176 | FD220 |
| RSV TUONO R | 1000 | 02- | FD262 | FD220 |
| RSV TUONO V4 R | 1000 | 11- | FD176 | FD220 |
| RSV R FACTORY | 1000 | 04- | FD262 | FD220 |
| SL 1000 FALCO | 1000 | 00- | FD176 | FD220 |
| RSV TUONO V4 R | 1100 | 15- | FD475 | FD220 |
| **BENELLI** | | | | |
| BN 600 | 600 | 13- | FD176 | FD220 |
| BN 600 GT | 600 | 15- | FD475 | FD220 |
| BN 600 R | 600 | 14- | FD475 | FD220 |
| 756 | 750 | 10- | FD176 | FD220 |
| DUE | 750 | 07- | FD262 | FD220 |
| CENTURY RACER 899 | 900 | 11- | FD262 | FD220 |
| TNT 899 S/T | 900 | 08-10 | FD176 | FD220 |
| TNT 899 | 900 | 11- | FD262 | FD220 |
| TORNADO TRE 900 LM | 900 | 03- | FD262 | FD220 |
| TRE-K 899 | 900 | 09- | FD176 | FD220 |
| SPORT TORNADO NAKED TRE | 1130 | 06- | FD262 | FD220 |
| TNT 1130 | 1130 | 04- | FD176 | FD220 |
| TNT CAFÉ RACER | 1130 | 06- | FD262 | FD220 |
| TNT R 160 | 1130 | 10- | FD262 | FD220 |
| TNT TITANIUM | 1130 | 06- | FD262 | FD220 |
| TREK AMAZONAS | 1130 | 07- | FD176 | FD220 |
| TORNADO TRE 1130 | 1130 | 06- | FD262 | FD220 |
| **BIMOTA** | | | | |
| DB5 MILLE | 992 | 05- | FD262 | FD220 |
| DB 5 R / S | 990 | 10- | FD262 | FD220 |
| DB 6 / R | 990 | 10- | FD262 | FD220 |
| DELIRIO | 1000 | 07- | FD262 | FD220 |
| TESI 3D | 1000 | 07- | FD262 | FD220 |
| DB 6 RE / E | 1100 | 12- | FD262 | FD220 |
| DB 7 | 1100 | 08-08 | FD262 | FD220 |
| DB 7 | 1100 | 09- | FD373 | FD220 |
| DB 10 | 1100 | 12- | FD262 | FD220 |
| TESI 3D | 1100 | 08- | FD262 | FD220 |
| DB 8 | 1198 | 10- | FD373 | FD220 |
| DB 8 SP | 1198 | 13- | FD373 | FD220 |
| DB 11 / VLX | 1198 | 13- | FD373 | FD220 |
| DB 12 B.TOURIST | 1198 | 13- | FD262 | FD220 |
| **BREMBO RACING** | | | | |
| 120A44110 | | - | | FD220 |
| 120B27810 | | - | | FD220 |
| **CAGIVA** | | | | |
| V-RAPTOR | 650 | 01- | FD176 | FD220 |
| RAPTOR | 1000 | 00- | FD176 | FD220 |
| V-RAPTOR | 1000 | 00- | FD176 | FD220 |
| X-TRA RAPTOR | 1000 | 02- | FD176 | FD220 |
| **CPI** | | | | |
| X-LARGE 150 | 150 | 03- | FD220 | FD220 |
| X-LARGE 250 | 250 | 03- | FD220 | FD220 |
| **DERBI** | | | | |
| GP 1 250 | 250 | 05-07 | FD220 | FD220 |
| GP 1 250 i | 250 | 08- | FD220 | FD252 |
| MULHACEN 650 | 650 | 06- | FD262 | FD220 |
| **DUCATI** | | | | |
| 400 MONSTER (JAPON) | 400 | 04- | FD176 | FD220 |
| MONSTER 620 / DARK | 620 | 05- | FD138 | FD220 |
| 620 SS | 620 | 03- | FD176 | FD220 |
| 748 R | 748 | 01-02 | FD262 | FD220 |
| 749 | 749 | 03- | FD262 | FD220 |
| 749 S/R | 749 | 03- | FD262 | FD220 |
| 750 SPORT | 750 | 01- | FD176 | FD220 |
| 750 SS | 750 | 98- | FD176 | FD220 |
| HYPERMOTARD | 796 | 10- | FD176 | FD220 |
| MONSTER 796 | 796 | 10- | FD176 | FD220 |
| MONSTER 796 ABS | 796 | 10- | FD176 | FD220 |
| MONSTER 800 S i.e | 800 | 03-04 | FD176 | FD220 |
| 800 SS | 800 | 03- | FD176 | FD220 |
| 800 SPORT | 800 | 03- | FD176 | FD220 |
| MONSTER 800 S2R | 800 | 05- | FD138 | FD220 |
| SCRAMBLER (TODAS) (ALL) | 800 | 15- | FD475 | FD220 |
| HYPERMOTARD | 821 | 13- | FD475 | FD220 |
| HYPERMOTARD SP | 821 | 13- | FD475 | FD220 |
| HYPERSTRADA | 821 | 13- | FD475 | FD220 |
| MONSTER 821 | 821 | 14- | FD475 | FD220 |
| 848 | 848 | 08- | FD176 | FD220 |

| | | | | |
|---|---|---|---|---|
| 848 EVO | 848 | 10- | FD373 | FD220 |
| 848 EVO CORSE SE | 848 | 12- | FD373 | FD220 |
| 848 S | 848 | 08- | FD176 | FD220 |
| 848 STREETFIGHTER | 848 | 12- | FD176 | FD220 |
| 848 STREETFIGHTER EVO SP | 848 | 12- | FD373 | FD220 |
| 899 PANIGALE | 899 | 13- | FD475 | FD220 |
| 900 SS | 900 | 98- | FD176 | FD220 |
| ST 4 | 916 | 99- | FD176 | FD220 |
| ST 2 944 | 944 | 97-98 | FD068 | FD220 |
| DESMOSEDICI RR | 989 | 07- | FD373 | FD220 |
| ST 3 / s ABS | 992 | 06- | FD176 | FD220 |
| 996 R | 996 | 99-01 | FD262 | FD220 |
| MONSTER S4R | 996 | 03-05 | FD176 | FD220 |
| 999 R | 999 | 03- | FD262 | FD220 |
| 999 S | 999 | 03- | FD262 | FD220 |
| 1000 MONSTER S i.e. | 1000 | 03-05 | FD176 | FD220 |
| 1000 MONSTER S2R | 1000 | 06- | FD176 | FD220 |
| 1000 MONSTER S4R | 1000 | 03-05 | FD176 | FD220 |
| 1000 MONSTER S4Rs | 1000 | 06- | FD262 | FD220 |
| MULTISTRADA 1000 DS | 1000 | 03- | FD176 | FD220 |
| MULTISTRADA 1000 S DS | 1000 | 06- | FD262 | FD220 |
| SS 1000 DS | 1000 | 03- | FD176 | FD220 |
| 1098 | 1100 | 07-08 | FD373 | FD220 |
| 1098 S | 1100 | 07-08 | FD373 | FD220 |
| HYPERMOTARD | 1100 | 07-09 | FD176 | FD220 |
| HYPERMOTARD EVO | 1100 | 10- | FD176 | FD220 |
| HYPERMOTARD EVO SP | 1100 | 10- | FD373 | FD220 |
| HYPERMOTARD S | 1100 | 07-09 | FD373 | FD220 |
| MONSTER | 1100 | 09- | FD176 | FD220 |
| MONSTER EVO | 1100 | 11- | FD176 | FD220 |
| MONSTER S | 1100 | 09- | FD176 | FD220 |
| MONSTER S (OHLINS) | 1100 | 09- | FD176 | FD220 |
| MULTISTRADA 1100 DS | 1100 | 07- | FD176 | FD220 |
| MULTISTRADA 1100 S DS | 1100 | 07- | FD176 | FD220 |
| STREETFIGHTER | 1100 | 09- | FD373 | FD220 |
| STREETFIGHTER S | 1100 | 09- | FD373 | FD220 |
| 1198 | 1198 | 10- | FD373 | FD220 |
| 1198 R SP | 1198 | 09- | FD373 | FD220 |
| 1198 S | 1198 | 09- | FD373 | FD220 |
| 1199 PANIGALE | 1199 | 12- | FD373 | FD220 |
| 1199 PANIGALE RS13 | 1199 | 13- | FD373 | FD220 |
| 1199 PANIGALE SUPERLEGGERA | 1199 | 14- | FD373 | FD220 |
| MONSTER 1200 | 1200 | 14- | FD475 | FD220 |
| MONSTER 1200 S | 1200 | 14- | FD373 | FD220 |
| MULTISTRADA 1200 | 1200 | 10-14 | FD176 | FD220 |
| MULTISTRADA 1200 PIKES PEAK | 1200 | 13-14 | FD176 | FD220 |
| MULTISTRADA 1200 S GRAN TURISMO | 1200 | 13-14 | FD176 | FD220 |
| MULTISTRADA 1200 SS | 1200 | 10-14 | FD176 | FD220 |
| MULTISTRADA 1200 ST | 1200 | 10-14 | FD176 | FD220 |
| 1299 PANIGALE | 1299 | 15- | FD373 | FD220 |
| 1299 PANIGALE R | 1299 | 15- | FD373 | FD220 |
| 1299 PANIGALE S | 1299 | 15- | FD373 | FD220 |
| **GILERA-PIAGGIO** | | | | |
| NEXUS i.e. | 250 | 06-06 | FD138 | FD220 |
| NEXUS | 500 | 03-05 | FD138 | FD220 |
| NEXUS i.e. SP | 500 | 06- | FD138 | FD220 |
| 600 SUPERSPORT | 600 | 02- | FD262 | FD220 |
| **HONDA** | | | | |
| RC 213 V | 1000 | 15- | FD373 | FD220 |
| **HOREX** | | | | |
| VR6 | 1250 | 12- | FD176 | FD220 |
| **KAWASAKI** | | | | |
| NINJA H2 (200cv) | 1000 | 15- | FD373 | FD220 |
| NINJA H2 R (310cv) | 1000 | 15- | FD373 | FD220 |
| **KEEWAY** | | | | |
| SILVER BLADE 150 | 150 | 07- | FD138 | FD220 |
| SILVER BLADE 250 | 250 | 07- | FD138 | FD220 |
| **KTM** | | | | |
| RC 8 | 1190 | 08- | FD373 | FD220 |
| RC 8 R | 1190 | 09- | FD373 | FD220 |
| 1290 SUPER DUKE R | 1290 | 13- | FD373 | FD220 |
| **LAVERDA** | | | | |
| SFC 1000 | 1000 | 03- | FD262 | FD220 |
| **MALAGUTI** | | | | |
| MADISON 180 | 180 | 02- | FD138 | FD220 |
| MADISON 200 | 200 | 04- | FD138 | FD220 |
| PHANTOM MAX 200 | 200 | 04- | FD162 | FD220 |
| MADISON 3 250 i.e. | 250 | 07- | FD162 | FD220 |

| | | | | |
|---|---|---|---|---|
| **MBK MOTOBEKANE** | | | | |
| SKYLINER | 150 | 01- | FD138 | FD220 |
| THUNDER | 150 | 01- | FD138 | FD220 |
| SKYLINER | 180 | 03- | FD138 | FD220 |
| **MONDIAL** | | | | |
| EVO | 1000 | 03- | FD262 | FD220 |
| NUDA | 1000 | 03- | FD262 | FD220 |
| PIEGA 1000 | 1000 | 03- | FD262 | FD220 |
| **MOTO GUZZI** | | | | |
| NEVADA 750 AQUILA NERA | 750 | 10- | FD176 | FD220 |
| STR V 750 ie | 750 | 03- | FD176 | FD220 |
| V 7 CLASSIC CAFÉ | 750 | 09- | FD176 | FD220 |
| V 7 RACER | 750 | 11- | FD176 | FD220 |
| V 7 SCRAMBLER | 750 | 12- | FD176 | FD220 |
| GRISO 850 8V | 850 | 06-08 | FD176 | FD220 |
| GRISO 850 8V SE SPECIAL EDITION | 850 | 09- | FD176 | FD220 |
| STR BREVA 850 | 850 | 06- | FD176 | FD220 |
| CALIFORNIA AQUILA NERA | 1000 | 10- | FD176 | FD220 |
| EV STONE | 1000 | 02- | FD176 | FD220 |
| MGS/01 1000 | 1000 | 03- | FD262 | FD220 |
| V11 SPORT BALLABIO | 1000 | 03- | FD176 | FD220 |
| GRISO | 1100 | 05- | FD176 | FD220 |
| STR 1100 | 1100 | 04- | FD176 | FD220 |
| **MOTO MORINI** | | | | |
| 9 1/2 | 950 | 05- | FD176 | FD220 |
| CORSARIO 1200 | 1200 | 05- | FD176 | FD220 |
| CORSARIO AVIO 1200 | 1200 | 08- | FD176 | FD220 |
| MM3 | 1200 | 07- | FD176 | FD220 |
| **MV AGUSTA** | | | | |
| BRUTALE 675 | 675 | 12- | FD176 | FD220 |
| F3 675 | 675 | 11- | FD176 | FD220 |
| F3 675 SERIE ORO | 675 | 12- | FD373 | FD220 |
| BRUTALE 800 | 800 | 13- | FD176 | FD220 |
| BRUTALE 800 RR | 800 | 15- | FD176 | FD220 |
| DRAGSTER 800 RR | 800 | 15- | FD176 | FD220 |
| RIVALE 800 | 800 | 13- | FD475 | FD220 |
| STRADALE 800 | 800 | 15- | FD475 | FD220 |
| TURISMO VELOCE | 800 | 14- | FD475 | FD220 |
| TURISMO VELOCE LUSSO | 800 | 14- | FD475 | FD220 |
| BRUTALE 1090 | 1078 | 13- | FD176 | FD220 |
| BRUTALE 1090 R | 1078 | 13- | FD176 | FD220 |
| BRUTALE 1090 RR | 1078 | 13- | FD373 | FD220 |
| **MZ/MuZ** | | | | |
| 1000 S | 1000 | 01- | FD176 | FD220 |
| **NORTON** | | | | |
| 952 COMANDO | 952 | 04- | FD068 | FD220 |
| COMMANDO 961 CAFE RACER | 961 | 10- | FD262 | FD220 |
| COMMANDO 961 SE | 961 | 10- | FD068 | FD220 |
| COMMANDO 961 SF | 961 | 13- | FD262 | FD220 |
| COMMANDO 961 SPORT | 961 | 10- | FD176 | FD220 |
| **PEUGEOT** | | | | |
| DJANGO EVASION | 150 | 14- | FD086 | FD220 |
| DJANGO HERITAGE | 150 | 14- | FD086 | FD220 |
| SATELIS 250 CITY | 250 | 06- | FD220 | FD200 |
| SATELIS 400 | 400 | 07- | FD140 | FD220 |
| SATELIS 400 ABS PBS | 400 | 07- | FD140 | FD220 |
| SATELIS 500 | 500 | 06- | FD220 | FD220 |
| SATELIS 500 ABS PBS | 500 | 07- | FD140 | FD220 |
| SATELIS 500 | 500 | 07-09 | FD140 | FD220 |
| **PETRONAS** | | | | |
| FP 1 | 1000 | 05- | FD262 | FD220 |
| **PIAGGIO** | | | | |
| X 9 AMALFI | 180 | 01- | FD220 | FD220 |
| X 9 | 200 | 01-02 | FD220 | FD220 |
| X 9 EVOLUTION DER. | 200 | 03- | FD334 | FD220 |
| X 9 | 250 | 00- | FD220 | FD220 |
| X 9 EVOLUTION RIGHT/DER. | 250 | 04- | FD334 | FD220 |
| BEVERLY 400 i.e. | 400 | 06- | FD138 | FD220 |
| MP 3 400 i.e. | 400 | 07- | FD220 | FD277 |
| X 8 i.e.w. RIGHT/DER. | 400 | 06- | FD334 | FD220 |
| BEVERLY 500 | 500 | 03- | FD220 | FD220 |
| X 9 | 500 | 01-02 | FD220 | FD220 |
| X 9 EVOLUTION | 500 | 03- | FD138 | FD220 |
| X 9 i.e. | 500 | 07- | FD138 | FD220 |
| **RIEJU** | | | | |
| TANGO TRAIL 250 | 250 | 09- | FD220 | FD065 |
| **SUZUKI** | | | | |
| UH 150 BURGMAN | 150 | 02- | FD138 | FD220 |

| | | | | |
|---|---|---|---|---|
| **VOXAN** | | | | |
| CAFÉ RACER | 1000 | 99- | FD176 | FD220 |
| CHARADE RACING | 1000 | 06- | FD262 | FD220 |
| BOXER | 1000 | 00- | FD176 | FD220 |
| ROADSTER | 1000 | 99- | FD176 | FD220 |
| GTV 1200 | 1200 | 08- | FD262 | FD220 |
| **YAMAHA** | | | | |
| MAXTER 150 | 150 | 01- | FD138 | FD220 |
| SP 150 MAGESTY | 150 | 01- | FD138 | FD220 |
| SP 180 MAGESTY | 180 | 03- | FD138 | FD220 |

**FD 222** — mm 44,8 x 53,4 — 8,6 — A | A
G1054 | G1380

| BRAND MARCA | MODEL MODELO | C.C. | YEAR | FRONT | REAR |
|---|---|---|---|---|---|
| **KAWASAKI** | | | | | |
| EPSILON 250 | | 250 | 03- | FD222 | FD400 |
| **SUZUKI** | | | | | |
| AN 250 BURGMAN | | 250 | 98-02 | FD222 | FD400 |
| AN 250 BURGMAN | | 250 | 03-06 | FD222 | FD400 |
| CJ 250 SKY WAVE / Type S | | 250 | 03- | FD222 | FD401 |
| AN 400 BURGMAN | | 400 | 98-02 | FD222 | FD400 |
| AN 400 BURGMAN | | 400 | 03-05 | FD222 | FD400 |
| CK SKY WAVE 400 | | 400 | 03- | FD222 | FD400 |
| **SYM** | | | | | |
| GTS 250 | | 250 | 07- | FD222 | FD399 |
| GT 500 | | 500 | 05- | FD222 | FD261 |

**FD 225** — mm 56,8 x 44,3 — 6,5 — A | A
G1054 | G1805

| BRAND MARCA | MODEL MODELO | C.C. | YEAR | FRONT | REAR |
|---|---|---|---|---|---|
| **GAS GAS** | | | | | |
| 250 PAMPERA | | 250 | 03- | FD162 | FD225 |

**FD 226** — mm 68,0 x 41,0 — 8,5 — A | A
G1054

| BRAND MARCA | MODEL MODELO | C.C. | YEAR | FRONT | REAR |
|---|---|---|---|---|---|
| **BUELL** | | | | | |
| SPECIAL M2 CYCLONE | | 1200 | 00- | FD226 | FD103 |

**FD 228** — mm 50,9 x 53,5 — 9,3 — A | A
G1054 | G1380

| BRAND MARCA | MODEL MODELO | C.C. | YEAR | FRONT | REAR |
|---|---|---|---|---|---|
| **APRILIA** | | | | | |
| SCARABEO 150 4T | | 150 | 98- | FD074 | FD228 |
| ARRECIFE 200 | | 200 | 03- | FD245 | FD228 |
| ATLANTIC 200 | | 200 | 03- | FD245 | FD228 |
| SCARABEO 200 / GT | | 200 | 02-06 | FD074 | FD228 |
| SCARABEO 200 | | 200 | 07- | FD245 | FD228 |
| SPORT CITY 200 | | 200 | 04- | FD074 | FD228 |
| ARRECIFE 250 SPRINT | | 250 | 06- | FD245 | FD228 |
| ATLANTIC 250 SPRINT | | 250 | 06- | FD245 | FD228 |
| LEONARDO 250 4T | | 250 | 99- | FD074 | FD228 |
| SCARABEO 250 | | 250 | 04-04 | FD074 | FD228 |
| SCARABEO 250 ie | | 250 | 05- | FD245 | FD228 |
| SPORT CITY 250 | | 250 | 06- | FD074 | FD228 |
| ARRECIFE 300 | | 300 | 10- | FD245 | FD228 |
| ATLANTIC 300 | | 300 | 10- | FD245 | FD228 |
| LEONARDO 300 | | 300 | 04- | FD074 | FD228 |
| SCARABEO 300 S | | 300 | 09- | FD245 | FD228 |
| SPORT CITY CUBE 300 | | 300 | 08- | FD074 | FD228 |
| ARRECIFE 400 SPRINT | | 400 | 07- | FD245 | FD228 |
| ATLANTIC 400 SPRINT | | 400 | 07- | FD245 | FD228 |
| SCARABEO 400 ie | | 400 | 07- | FD074 | FD228 |
| ARRECIFE 500 | | 500 | 02- | FD074 | FD228 |
| ARRECIFE 500 SPRINT | | 500 | 05- | FD245 | FD228 |
| ATLANTIC 500 | | 500 | 02- | FD074 | FD228 |
| ATLANTIC 500 SPRINT | | 500 | 05- | FD245 | FD228 |
| SCARABEO 500 | | 500 | 03- | FD074 | FD228 |
| SCARABEO 500 ABS++ | | 500 | 03- | FD074 | FD228 |
| **BENELLI** | | | | | |
| VELVET 250 | | 250 | 99- | FD162 | FD228 |
| VELVET DUSK 400 | | 400 | 03- | FD162 | FD228 |
| **BETA** | | | | | |
| EIKON 150 4T | | 150 | 99- | FD153 | FD228 |
| **DERBI** | | | | | |
| RAMBLA 250 ie | | 250 | 08- | FD074 | FD228 |
| RAMBLA 300 ie | | 300 | 10- | FD074 | FD228 |
| **MALAGUTI** | | | | | |
| F 18 WARRIOR | | 150 | 00-03 | FD153 | FD228 |
| MADISON 150 | | 150 | 00- | FD162 | FD228 |
| MADISON 250 | | 250 | 99-05 | FD245 | FD228 |
| MADISON RS 250 | | 250 | 06-06 | FD074 | FD228 |
| PASSWORD 250 | | 250 | 05-06 | FD074 | FD228 |
| PASSWORD 250 | | 250 | 07- | FD162 | FD228 |
| PHANTOM MAX 250 | | 250 | 05- | FD162 | FD228 |
| MADISON 400 | | 400 | 01-05 | FD245 | FD228 |
| MADISON K 400 | | 400 | 06- | FD245 | FD228 |
| SPIDER MAX GT 500 | | 500 | 04- | FD074 | FD228 |

**FD 234** — mm 54,0 x 50,7 — 7,0 — A | A
G1054

| BRAND MARCA | MODEL MODELO | C.C. | YEAR | FRONT | REAR |
|---|---|---|---|---|---|
| **APRILIA** | | | | | |
| LEONARDO 150 4T | | 150 | 99- | FD234 | FD234 |
| SR 150 | | 150 | 00- | FD234 | MF |

**FD 235** — mm 93,0 x 65,0 — 7,5 — A | B
mm 93,0 x 65,0 — 7,5 — A | B
G1054 | G1370

| BRAND MARCA | MODEL MODELO | C.C. | YEAR | FRONT | REAR |
|---|---|---|---|---|---|
| **HARLEY DAVIDSON** | | | | | |
| XL SPORTSTER CUSTOM | | 883 | 00-03 | FD235 | FD235 |
| XL SPORTSTER HUGGER | | 883 | 00- | FD235 | FD235 |
| XLH SPORTSTER | | 883 | 00- | FD235 | FD235 |
| XLH SPORTSTER R | | 883 | 00-04 | FD235 | FD235 |
| XL SPORTSTER CUSTOM | | 1200 | 00-03 | FD235 | FD235 |
| XL SPORTSTER SPORT | | 1200 | 00- | FD235 | FD235 |
| FXD SUPER GLIDE | | 1340 | 00- | FD235 | FD235 |
| FXDL LOW RIDER | | 1340 | 00- | FD235 | FD235 |
| FXDSCON DYNA CONVER | | 1340 | 00- | FD235 | FD235 |
| FXDWG WIDE GLIDE | | 1340 | 00-07 | FD235 | FD235 |
| FXDX SUPER GLIDE SPORT | | 1340 | 00- | FD235 | FD235 |
| FXDXT SUPER GLIDE T SPORT | | 1340 | 01- | FD375 | FD235 |
| FXDBi STREET BOB | | 1450 | 06-07 | FD235 | FD235 |
| FXDBi STREET BOB | | 1450 | 08- | FD235 | FD406 |
| FXDCi SUPER GLIDE CUSTOM | | 1450 | 05- | FD235 | FD235 |
| FXDCi SUPER GLIDE CUSTOM (cast wheel) | | 1450 | 06- | FD235 | FD235 |
| FXDCi SUPER GLIDE CUSTOM DYNA | | 1450 | 06-07 | FD235 | FD235 |
| FXDi 35th ANIVERSARIO SUPER GLIDE | | 1450 | 06- | FD235 | FD235 |
| FXDi SUPER GLIDE | | 1450 | 04-05 | FD235 | FD235 |
| FXDi SUPER GLIDE (cast wheel) | | 1450 | 06- | FD235 | FD235 |
| FXDLi LOW RIDER | | 1450 | 04-05 | FD235 | FD235 |
| FXDLi LOW RIDER (cast wheel) | | 1450 | 06-07 | FD235 | FD235 |
| FXDLi LOW RIDER DYNA | | 1450 | 06- | FD235 | FD235 |
| FXDWGi WIDE GLIDE | | 1450 | 04-05 | FD235 | FD235 |
| FXDWGi WIDE GLIDE DYNA | | 1450 | 06-09 | FD235 | FD235 |
| FXDXi SUPER GLIDE SPORT | | 1450 | 04- | FD235 | FD235 |
| FLSTC/i HERITAGE CLASSIC | | 1340 | 00- | FD235 | FD235 |
| FLSTF/i FAT BOY | | 1340 | 00-06 | FD235 | FD235 |
| FLSTi FAT BOY 15th ANIVERSARIO | | 1340 | 05- | FD235 | FD235 |
| FLSTS HERITAGE SPRINGER | | 1340 | 00- | FD124 | FD235 |
| FXST/i SOFTAIL STANDARD | | 1340 | 00-05 | FD235 | FD235 |
| FXSTB/i NIGHT TRAIN | | 1340 | 00-05 | FD235 | FD235 |
| FXSTD/i SOFTAIL DEUCE | | 1340 | 00- | FD235 | FD235 |
| FXSTS/i SOFTAIL SPRINGER | | 1340 | 00- | FD124 | FD235 |
| FLST/i HERITAGE SOFTAIL | | 1450 | 06- | FD235 | FD235 |
| FLSTC HERITAGE CLASSIC SOFTAIL | | 1450 | 07-07 | FD235 | FD235 |
| FLSTF/i FAT BOY | | 1450 | 07-07 | FD235 | FD235 |
| FLSTN/i SOFTAIL DE LUXE | | 1450 | 05-07 | FD235 | FD235 |
| FLSTSB SOFTAIL CROSS BONES | | 1450 | 08- | FD124 | FD235 |
| FLSTSC/i SPRINGER CLASSIC | | 1450 | 05- | FD124 | FD235 |
| FXST/i SOFTAIL STANDARD | | 1450 | 06- | FD235 | FD235 |
| FXSTB/i NIGHT TRAIN SOFTAIL | | 1450 | 06-07 | FD235 | FD235 |
| FXSTC SOFTAIL CUSTOM | | 1450 | 07-07 | FD235 | FD235 |
| FLHR/i ROAD KING | | 1340 | 00-07 | FD235 | FD235 |
| FLHR/i ROAD KING | | 1340 | 00-07 | FD235 | FD235 |
| FLHRS/i ROAD KING CUSTOM | | 1340 | 04-07 | FD235 | FD235 |
| FLHT/i ELECTRA GLIDE STANDARD | | 1340 | 00-07 | FD235 | FD235 |
| FLHTC/i ELECTRA GLIDE CLASSIC | | 1340 | 04-07 | FD235 | FD235 |
| FLHTCU ELECTRA GLIDE ULTRA CLASSIC | | 1340 | 00-07 | FD235 | FD235 |
| FLTR/i ROAD GLIDE | | 1340 | 00-07 | FD235 | FD235 |
| FLHX/i STREET GLIDE | | 1450 | 06-07 | FD235 | FD235 |
| V-ROD (HAYES CALIPER) | | 1185 | 02-05 | FD235 | FD235 |

**FD 245** — mm 117,5 x 40,0 — 8,4 — A | A[1]
G1054 | G1380

| BRAND MARCA | MODEL MODELO | C.C. | YEAR | FRONT | REAR |
|---|---|---|---|---|---|
| **APRILIA** | | | | | |
| ARRECIFE 200 | | 200 | 03- | FD245 | FD228 |
| ATLANTIC 200 | | 200 | 03- | FD245 | FD228 |
| SCARABEO 200 | | 200 | 07- | FD245 | FD228 |
| ARRECIFE 250 SPRINT | | 250 | 06- | FD245 | FD228 |
| ATLANTIC 250 SPRINT | | 250 | 06- | FD245 | FD228 |
| SCARABEO 250 ie | | 250 | 05- | FD245 | FD228 |
| ARRECIFE 300 | | 300 | 10- | FD245 | FD228 |
| ATLANTIC 300 | | 300 | 10- | FD245 | FD228 |
| SCARABEO 300 S | | 300 | 09- | FD245 | FD228 |
| ARRECIFE 400 SPRINT | | 400 | 07- | FD245 | FD228 |
| ATLANTIC 400 SPRINT | | 400 | 07- | FD245 | FD228 |
| ARRECIFE 500 SPRINT | | 500 | 05- | FD245 | FD228 |
| ATLANTIC 500 SPRINT | | 500 | 05- | FD245 | FD228 |
| **KYMCO** | | | | | |
| AGILITY MAXI | | 300 | 15- | FD245 | FD438 |
| K - XCT 300i | | 300 | 12- | FD245 | FD474 |
| PEOPLE GT 300i | | 300 | 10- | FD245 | FD399 |
| DOWNTOWN | | 350 | 15- | FD245 | FD438 |
| **MALAGUTI** | | | | | |
| MADISON 250 | | 250 | 99-05 | FD245 | FD228 |
| MADISON 400 | | 400 | 01-05 | FD245 | FD228 |
| MADISON K 400 | | 400 | 06- | FD245 | FD228 |
| **PIAGGIO** | | | | | |
| BEVERLY SPORT TOURER | | 350 | 12- | FD245 | FD334 |



For other models years previous to 1990 visit **www.galferonline.es** - Para otros modelos anteriores al año 1990 visitar **www.galferonline.es**
For consult TÜV (ABE) type approvals visit **www.galfermoto.com --> DOWNLOAD --> TÜV CERTIFICATIONS** - Para consultar las homologaciones TÜV (ABE) visitar **www.galfermoto.com --> DESCARGAS --> CERTIFICACIONES TÜV**

## FD 251

G1054

| mm | | | |
|---|---|---|---|
| 74,9 x 54,6 | 9,0 | A | A |

| BRAND MARCA | MODEL MODELO | C.C. | YEAR | FRONT | REAR |
|---|---|---|---|---|---|
| **BMW** | | | | | |
| | K 1200 GT | 1200 | 02-05 | FD271 | FD251 |
| | K 1200 LT | 1200 | 97-00 | FD198 | FD251 |
| | K 1200 LT | 1200 | 01-08 | FD272 | FD251 |
| | K 1200 LT | 1200 | 09- | FD272 | FD251 |

## FD 252

G1054

| mm | | | |
|---|---|---|---|
| 56,0 x 36,0 | 10,2 | A | B |
| 88,0 x 49,0 | 7,6 | A | B |

| BRAND MARCA | MODEL MODELO | C.C. | YEAR | FRONT | REAR |
|---|---|---|---|---|---|
| **DERBI** | | | | | |
| | GP 1 250 i | 250 | 08- | FD220 | FD252 |
| **GAS GAS** | | | | | |
| | HALLEY 450 | 450 | 09- | FD409 | FD252 |
| **TGB** | | | | | |
| | 42 RACING 150 | 150 | 06- | FD252 | MF453 |
| | 409 F | 150 | 06- | FD252 | MF453 |

## FD 259

G1054

| mm | | | |
|---|---|---|---|
| 91,5 x 40,0 | 10,0 | A | B |
| 107,0 x 42,5 | 10,0 | A | B |

| BRAND MARCA | MODEL MODELO | C.C. | YEAR | FRONT | REAR |
|---|---|---|---|---|---|
| **HONDA INDONESIA** | | | | | |
| | CB 150 R STREETFIRE | 150 | 11- | FD298 | FD259 |
| | MEGA PRO CW | 150 | 11- | FD298 | FD259 |
| | TIGER DOUBLE | 200 | 11- | FD298 | FD259 |
| | TIGER SINGLE | 200 | 11- | FD298 | FD259 |
| **SUZUKI INDONESIA** | | | | | |
| | SATRIA F 150 | 150 | 11- | FD117 | FD259 |
| **SUZUKI MALASIA** | | | | | |
| | BELANG R 150 | 150 | 11- | FD117 | FD259 |
| **YAMAHA INDONESIA** | | | | | |
| | JUPITER MX T 135 | 135 | 06- | FD393 | FD259 |

## FD 260

G1054 | G1380

| mm | | | |
|---|---|---|---|
| 100,0 x 38,4 | 12,0 | A | A |

| BRAND MARCA | MODEL MODELO | C.C. | YEAR | FRONT | REAR |
|---|---|---|---|---|---|
| **YAMAHA** | | | | | |
| | XP 500 T-MAX | 500 | 00-03 | FD142 | FD260 |
| | XP 500 T-MAX CUP | 500 | 03- | FD068 | FD260 |
| | XP 530 T-MAX | 530 | 12- | FD178 | FD260 |
| | XP 530 T-MAX ABS | 530 | 12- | FD178 | FD260 |

## FD 261

G1054 | G1397

| mm | | | |
|---|---|---|---|
| 64,1 x 36,8 | 10,8 | A | B |
| 85,0 x 44,0 | 8,6 | A | B |

| BRAND MARCA | MODEL MODELO | C.C. | YEAR | FRONT | REAR |
|---|---|---|---|---|---|
| **KYMCO** | | | | | |
| | PEOPLE | 150 | 99- | FD261 | MF740 |
| | PEOPLE | 200 | 05- | FD261 | MF740 |
| | SUPER 9 | 250 | 00- | FD145 | FD261 |
| **SYM** | | | | | |
| | JOYRIDE | 150 | 01- | FD412 | FD261 |
| | JOYRIDE | 200 | 01- | FD412 | FD261 |
| | JOYRIDE 200i EVO | 200 | 13- | FD412 | FD261 |
| | GT 500 | 500 | 05- | FD222 | FD261 |

## FD 262

G1054 | G1370 | G1375 | G1003 | G1300

| mm | | |
|---|---|---|
| 35,0 x 40,5 | 7,5 | A (4x) |

| BRAND MARCA | MODEL MODELO | C.C. | YEAR | FRONT | REAR |
|---|---|---|---|---|---|
| **APRILIA** | | | | | |
| | RSV MILLE | 1000 | 01- | FD262 | FD220 |
| | RSV MILLE R | 1000 | 01- | FD262 | FD220 |
| | RSV TUONO R | 1000 | 02- | FD262 | FD220 |
| | RSV R FACTORY | 1000 | 04- | FD262 | FD220 |
| **BENELLI** | | | | | |
| | 570 SUPERMOTO | 570 | 08- | FD262 | FD165 |
| | DUE | 750 | 07- | FD262 | FD220 |
| | CENTURY RACER 899 | 900 | 11- | FD262 | FD220 |
| | TNT 899 | 900 | 11- | FD262 | FD220 |
| | TORNADO TRE 900 LM | 900 | 03- | FD262 | FD220 |
| | SPORT TORNADO NAKED TRE | 1130 | 06- | FD262 | FD220 |
| | TNT CAFÉ RACER | 1130 | 06- | FD262 | FD220 |
| | TNT R 160 | 1130 | 10- | FD262 | FD220 |
| | TNT TITANIUM | 1130 | 06- | FD262 | FD220 |
| | TORNADO TRE 1130 | 1130 | 06- | FD262 | FD220 |
| **BIMOTA** | | | | | |
| | DB5 MILLE | 992 | 05- | FD262 | FD220 |
| | DB 5 R / S | 990 | 10- | FD262 | FD220 |
| | DB 6 / R | 990 | 10- | FD262 | FD220 |
| | SB8 K SANTAMONICA | 996 | 06- | FD262 | FD012 |
| | DELIRIO | 1000 | 07- | FD262 | FD220 |
| | TESI 3D | 1000 | 07- | FD262 | FD220 |
| | DB 6 RE / E | 1100 | 12- | FD262 | FD220 |
| | DB 7 | 1100 | 08-08 | FD262 | FD220 |
| | DB 10 | 1100 | 12- | FD262 | FD220 |
| | TESI 3D | 1100 | 08- | FD262 | FD220 |
| | DB 12 B.TOURIST | 1198 | 13- | FD262 | FD220 |
| **BREMBO CUSTOM** | | | | | |
| | 120B814** | | - | FD262 | |
| **CAGIVA** | | | | | |
| | MITO 500 | 500 | 08- | FD262 | FD012 |
| **DERBI** | | | | | |
| | MULHACEN 650 | 650 | 06- | FD262 | FD220 |
| **DUCATI** | | | | | |
| | 748 R | 748 | 01-02 | FD262 | FD220 |
| | 749 | 749 | 03- | FD262 | FD220 |
| | 749 S/R | 749 | 03- | FD262 | FD220 |
| | 996 R | 996 | 99-01 | FD262 | FD220 |
| | 998 R | 998 | 02- | FD262 | FD012 |
| | 998 S | 998 | 02- | FD262 | FD012 |
| | 999 R | 999 | 03- | FD262 | FD220 |
| | 999 S | 999 | 03- | FD262 | FD220 |
| | 1000 MONSTER S4Rs | 1000 | 06- | FD262 | FD220 |
| | MULTISTRADA 1000 S DS | 1000 | 06- | FD262 | FD220 |
| **GILERA-PIAGGIO** | | | | | |
| | 600 SUPERSPORT | 600 | 02- | FD262 | FD220 |
| | GP 850 CORSA | 850 | 09- | FD262 | FD165 |
| **HUSQVARNA** | | | | | |
| | 510 SM R | 510 | 05-05 | FD262 | FD165 |
| | 510 SM R | 510 | 06- | FD262 | FD291 |
| | SMR 511 | 511 | 11- | FD262 | FD291 |
| | 610 SM R | 610 | 05-05 | FD262 | FD165 |
| | 610 SM R | 610 | 06- | FD262 | FD165 |
| | 610 SM ie | 610 | 07- | FD262 | FD165 |
| | 630 SM | 630 | 10- | FD262 | FD165 |
| | 630 SMS | 630 | 11- | FD262 | FD165 |
| | STR 650 CRC | 650 | 07- | FD262 | FD291 |
| | 701 SUPERMOTO | 701 | 15- | FD262 | FD165 |
| **KTM** | | | | | |
| | 690 DUKE | 690 | 08- | FD262 | FD165 |
| | 690 DUKE III R | 690 | 10- | FD262 | FD165 |
| | 690 SM /PRESTIGE | 690 | 07- | FD262 | FD165 |
| | 690 SMC | 690 | 08- | FD262 | FD165 |
| | 690 SMC R | 690 | 13- | FD262 | FD165 |
| | 690 SMC R ABS | 690 | 13- | FD262 | FD165 |
| | 690 SMR | 690 | 07- | FD262 | FD165 |
| | 950 SUPERMOTO R | 950 | 07- | FD262 | FD138 |
| | LC8 990 DUKE | 950 | 03- | FD262 | FD165 |
| | SUPERMOTO 950 | 950 | 05- | FD262 | FD138 |
| | SUPER DUKE | 950 | 05- | FD262 | FD165 |
| | 990 SM T | 990 | 09- | FD262 | FD138 |
| | 990 SM T ABS | 990 | 11- | FD262 | FD138 |
| | 990 SUPER DUKE | 990 | 06- | FD262 | FD165 |
| | 990 SUPERMOTO / R | 990 | 08-09 | FD262 | FD138 |
| **LAVERDA** | | | | | |
| | SFC 1000 | 1000 | 03- | FD262 | FD220 |
| **MONDIAL** | | | | | |
| | EVO | 1000 | 03- | FD262 | FD220 |
| | NUDA | 1000 | 03- | FD262 | FD220 |
| | PIEGA 1000 | 1000 | 03- | FD262 | FD220 |
| **MOTO GUZZI** | | | | | |
| | MGS/01 1000 | 1000 | 03- | FD262 | FD220 |
| | STELVIO NTX | 1200 | 12- | FD262 | FD138 |
| **MV AGUSTA** | | | | | |
| | F-4 1000 | 1000 | 06-06 | FD262 | FD486 |
| **NORTON** | | | | | |
| | COMMANDO 961 CAFE RACER | 961 | 10- | FD262 | FD220 |
| | COMMANDO 961 SF | 961 | 13- | FD262 | FD220 |
| **PETRONAS** | | | | | |
| | FP 1 | 1000 | 05- | FD262 | FD220 |
| **TM** | | | | | |
| | SMM 530 F | 530 | 14- | FD262 | FD286 |
| | SMR 530 F | 530 | 14- | FD262 | FD286 |
| | SMX 530 F | 530 | 10-14 | FD262 | FD286 |
| | SMX 660 F | 660 | 04-14 | FD262 | FD286 |
| | SMX 660 F | 660 | 15- | FD262 | FD286 |
| **TRIUMPH** | | | | | |
| | SPEED TRIPLE 1050 | 1050 | 05-05 | FD262 | FD086 |
| | SPEED TRIPLE 1050 | 1050 | 08-10 | FD262 | FD086 |
| | SPEED TRIPLE 1050 | 1050 | 11-11 | FD262 | FD086 |
| **VOXAN** | | | | | |
| | CHARADE RACING | 1000 | 06- | FD262 | FD220 |
| | GTV 1200 | 1200 | 08- | FD262 | FD220 |

## FD 263

G1054

| mm | | | |
|---|---|---|---|
| 55,5 x 49,0 | 7,0 | A | A |

| BRAND MARCA | MODEL MODELO | C.C. | YEAR | FRONT | REAR |
|---|---|---|---|---|---|
| **BENELLI** | | | | | |
| | ADIVA | 150 | 00- | FD153 | FD263 |
| **GILERA-PIAGGIO** | | | | | |
| | DNA 180 (G) | 180 | 01- | FD162 | FD263 |
| | DNA 180 (H) | 180 | 01- | FD277 | FD263 |
| | MAD-MUD (G) | 180 | 02- | FD162 | FD263 |
| | MAD-MUD (H) | 180 | 02- | FD277 | FD263 |
| | RUNNER 180 VXR (G) | 180 | 01- | FD162 | FD263 |

| | | | | |
|---|---|---|---|---|
| RUNNER 180 VXR (H) | 180 | 01- | FD277 | FD263 |
| RUNNER 200 VXR | 200 | 02-05 | FD162 | FD263 |
| RUNNER 200 VXR | 200 | 06- | FD277 | FD263 |
| NEXUS i.e. | 250 | 07- | FD277 | FD263 |
| **PIAGGIO** | | | | |
| HEXAGON GTX 150 (G) | 150 | 00- | FD162 | FD263 |
| HEXAGON GTX 150 (H) | 150 | 00- | FD277 | FD263 |
| HEXAGON GTX 180 (G) | 180 | 00-00 | FD162 | FD263 |
| HEXAGON GTX 180 (H) | 180 | 00-00 | FD277 | FD263 |
| SUPER HEXAGON GTX 180 (G) | 180 | 01- | FD162 | FD263 |
| SUPER HEXAGON GTX 180 (H) | 180 | 01- | FD277 | FD263 |
| VESPA GRAN TURISMO (G) | 200 | 03- | FD162 | FD263 |
| VESPA GRAN TURISMO (H) | 200 | 03- | FD277 | FD263 |
| HEXAGON GTX 250 (G) | 250 | 00- | FD162 | FD263 |
| HEXAGON GTX 250 (H) | 250 | 00- | FD277 | FD263 |

## FD 266

mm: 102,1 x 38,7 | 8,3 | A | A[1]

G1054 | G1370 | G1375 | G1380

| BRAND MARCA | MODEL MODELO | C.C. | YEAR | FRONT | REAR |
|---|---|---|---|---|---|
| **BMW** | | | | | |
| C 600 SPORT | | 600 | 12- | FD266 | FD266 |
| C 650 GT | | 650 | 12- | FD266 | FD266 |
| **CAGIVA** | | | | | |
| GRAN CANYON | | 900 | 99- | FD266 | FD117 |
| NAVIGATOR | | 1000 | 00- | FD266 | FD117 |
| **CFMOTO** | | | | | |
| NK 650 | | 650 | 13- | FD266 | FD167 |
| **HONDA** | | | | | |
| SH 150 i SCOOPY CBS | | 150 | 13- | FD266 | FD345 |
| CB 250 | | 250 | 92- | FD266 | MF006 |
| CB 250 TWO FIFTY | | 250 | 92- | FD266 | MF006 |
| CBR 250 R | | 250 | 11- | FD266 | FD457 |
| VTZ 250 XELVIS | | 250 | 97- | FD266 | FD103 |
| V-TWIN MAGNA | | 250 | 97- | FD266 | MF |
| CBR 300 R ABS | | 300 | 14- | FD266 | FD457 |
| CB 400 FOUR | | 400 | 97-00 | FD266 | FD103 |
| CB 400 SS | | 400 | 01- | FD266 | MF |
| CBR 400 RR | | 400 | 98- | FD266 | FD134 |
| VT 400 SHADOW | | 400 | 97-01 | FD266 | MF |
| VT 400 SHADOW SLASHER | | 400 | 02- | FD266 | MF |
| CB 500 | | 500 | 95-96 | FD266 | MF035 |
| CB 500 F | | 500 | 13- | FD266 | FD103 |
| CB 500 F ABS | | 500 | 13- | FD266 | FD103 |
| CB 500 X | | 500 | 13- | FD266 | FD103 |
| CB 500 X ABS | | 500 | 13- | FD266 | FD103 |
| CBR 500 R | | 500 | 13- | FD266 | FD103 |
| CBR 500 R ABS | | 500 | 13- | FD266 | FD103 |
| 599 (USA) | | 600 | 00-06 | FD266 | FD134 |
| 599 (USA) | | 600 | 07- | FD266 | FD363 |
| CB 600 HORNET | | 600 | 98-99 | FD266 | FD134 |
| CB 600 HORNET /S | | 600 | 00-06 | FD266 | FD134 |
| CB 600 HORNET | | 600 | 07- | FD266 | FD363 |
| CBF 600 /S | | 600 | 04-07 | FD266 | FD134 |
| CBF 600 /S | | 600 | 08- | FD266 | FD134 |
| CBR 600 F3 | | 600 | 95-98 | FD266 | FD134 |
| CBR 600 F | | 600 | 11- | FD266 | FD363 |
| VT 600 SHADOW | | 600 | 06- | FD266 | MF035 |
| VT 600 CD SHADOW VLX | | 600 | 94- | FD266 | MF035 |
| CB 650 F ABS | | 650 | 14- | FD266 | FD103 |
| CBR 650 F ABS | | 650 | 14- | FD266 | FD103 |
| FMX 650 | | 650 | 05- | FD266 | FD103 |
| NTV 650 REVERE | | 650 | 91- | FD266 | FD103 |
| CTX 700 | | 700 | 13- | FD266 | FD103 |
| CTX 700 ABS | | 700 | 13- | FD266 | FD103 |
| CTX 700 N | | 700 | 13- | FD266 | FD103 |
| CTX 700 N ABS | | 700 | 13- | FD266 | FD103 |
| NC 700 S | | 700 | 12- | FD266 | FD134 |
| NC 700 X | | 700 | 12- | FD266 | FD134 |
| CB 750 SEVEN FIFTY | | 750 | 92- | FD266 | FD134 |
| INTEGRA | | 750 | 14- | FD266 | FD134 |
| NC 750 S | | 750 | 14- | FD266 | FD134 |
| NC 750 S ABS | | 750 | 14- | FD266 | FD134 |
| NC 750 X | | 750 | 14- | FD266 | FD134 |
| NC 750 X ABS | | 750 | 14- | FD266 | FD134 |
| NM4-VULTUS | | 750 | 15- | FD266 | FD134 |
| VF 750 C MAGNA | | 750 | 95- | FD266 | MF043 |
| VFR 750 F | | 750 | 90-93 | FD266 | FD140 |
| VFR 750 F | | 750 | 94-97 | FD266 | FD140 |
| CB 1000 SF | | 1000 | 93- | FD266 | FD140 |
| CBF 1000 | | 1000 | 06- | FD266 | FD134 |
| ST 1100 PAN-EUROPEAN | | 1100 | 91-95 | FD266 | FD140 |
| VT 1100 C2 SHADOW ACE | | 1100 | 95-96 | FD266 | FD140 |
| VT 1200 MAGNA | | 1200 | 95- | FD266 | FD140 |
| VTX 1300 S/C RETRO | | 1300 | 03- | FD266 | FD134 |
| F6C 1500 VALKYRIA | | 1500 | 97- | FD266 | FD140 |
| **HONDA INDONESIA** | | | | | |
| CBR 250 R | | 250 | 11- | FD266 | FD457 |
| **HONDA MALASIA** | | | | | |
| CBR 250 R | | 250 | 11- | FD266 | FD457 |
| **INDIAN MOTORCYCLE** | | | | | |
| SCOUT | | 1130 | 15- | FD266 | |
| **KAWASAKI** | | | | | |
| J 300 | | 300 | 14- | FD266 | FD438 |
| J 300 SE | | 300 | 14- | FD266 | FD438 |
| VERSYS 650 | | 650 | 15- | FD266 | FD103 |
| Z 750 | | 750 | 07- | FD266 | FD134 |
| Z 750 ABS | | 750 | 07- | FD266 | FD134 |
| Z 800e | | 800 | 13- | FD266 | FD103 |
| GPZ 900 R | | 900 | 90-96 | FD266 | FD090 |
| GPZ 1100 S | | 1100 | 95- | FD266 | FD111 |
| **KAWASAKI MALASIA** | | | | | |
| Z 800e | | 800 | 13- | FD266 | FD103 |
| **KYMCO** | | | | | |
| DOWNTOWN | | 200 | 10- | FD266 | FD438 |
| VENOX STEEL | | 250 | 01- | FD266 | MF |
| XCITING 250 | | 250 | 05-05 | FD266 | FD474 |
| XCITING 250 | | 250 | 06- | FD266 | FD474 |
| XCITING 250 R | | 250 | 08- | FD266 | FD266 |
| DOWNTOWN | | 300 | 09-14 | FD266 | FD438 |
| SUPER DINK 300 | | 300 | 10- | FD266 | FD438 |
| SUPER DINK 300 i ABS | | 300 | 11- | FD266 | FD438 |
| XCITING 300i | | 300 | 08- | FD266 | FD474 |
| XCITING 300i R | | 300 | 08- | FD266 | FD474 |
| YAGER GT 300 i | | 300 | 13- | FD266 | FD438 |
| XCITING 400 | | 400 | 12- | FD367 | FD266 |
| XCITING 500 | | 500 | 04- | FD266 | FD266 |
| MYROAD 700 | | 700 | 08- | FD266 | FD266 |
| **SUMCO** | | | | | |
| 250 TWIN | | 250 | 05- | FD266 | MF |
| **SUZUKI** | | | | | |
| GW 250 INAZUMA | | 250 | 12-14 | FD266 | FD457 |
| GW 250 INAZUMA F | | 250 | 15- | FD266 | FD457 |
| GW 250 INAZUMA S | | 250 | 13-14 | FD266 | FD457 |
| GW 250 INAZUMA Z | | 250 | 15- | FD266 | FD457 |
| GSX 400 IMPULSE (Japan) | | 400 | 94-98 | FD266 | FD045 |
| RF 400 R | | 400 | 93- | FD266 | FD045 |
| GSF 600 N BANDIT | | 600 | 95-99 | FD266 | FD111 |
| RF 600 R | | 600 | 93- | FD266 | FD111 |
| AN 650 BURGMAN | | 650 | 02-03 | FD266 | FD401 |
| AN 650 BURGMAN | | 650 | 04-12 | FD266 | FD401 |
| AN 650 BURGMAN | | 650 | 13- | FD266 | FD401 |
| CP SKY WAVE 650 | | 650 | 03-03 | FD266 | FD401 |
| CP SKY WAVE 650 | | 650 | 04- | FD266 | FD401 |
| **SUZUKI INDONESIA** | | | | | |
| GW 250 INAZUMA | | 250 | 12- | FD266 | FD103 |
| **TRIUMPH** | | | | | |
| AMERICA | | 800 | 05- | FD266 | FD086 |
| TIGER 800 | | 800 | 11- | FD266 | FD103 |
| TIGER 800 XC | | 800 | 11-14 | FD266 | FD103 |
| TIGER 800 XCx | | 800 | 15- | FD266 | FD103 |
| TIGER 800 XRx | | 800 | 15- | FD266 | FD103 |
| LEGEND TT | | 900 | 99- | FD266 | FD140 |
| THUNDERBIRD 900/SPORT | | 900 | 95- | FD266 | FD140 |
| **YAMAHA** | | | | | |
| X - MAX 250 | | 250 | 10- | FD266 | FD214 |
| X - MAX 400 | | 400 | 13- | FD266 | FD474 |

## FD 267

mm: 59,8 x 57,2 | 9,5 | A | A

G1054 | G1371

| BRAND MARCA | MODEL MODELO | C.C. | YEAR | FRONT | REAR |
|---|---|---|---|---|---|
| **HONDA** | | | | | |
| CB 400 SF | | 400 | 02-04 | FD219 | FD267 |
| CB 1300 | | 1300 | 98-00 | FD193 | FD267 |
| CB 1300 | | 1300 | 01-02 | FD219 | FD267 |
| X-4 LOW DOWN | | 1300 | 00- | FD148 | FD267 |
| **KAWASAKI** | | | | | |
| ZX 7 RR (ZX750P1) | | 750 | 96- | FD193 | FD267 |
| GTR 1400 | | 1400 | 07-09 | FD371 | FD267 |
| GTR 1400 | | 1400 | 10- | FD371 | FD267 |
| GTR 1400 GRAND TOUR | | 1400 | 10- | FD371 | FD267 |
| ZG 1400 CONCOURS | | 1400 | 08- | FD371 | FD267 |
| ZG 1400 CONCOURS ABS | | 1400 | 08-09 | FD371 | FD267 |
| ZG 1400 CONCOURS ABS | | 1400 | 10- | FD371 | FD267 |
| ZZR 1400 | | 1400 | 06-11 | FD371 | FD267 |
| ZZR 1400 | | 1400 | 12- | FD371 | FD267 |
| ZX-14 R | | 1400 | 06- | FD371 | FD267 |
| ZX-14 R ABS | | 1400 | 14- | FD371 | FD267 |
| **SUZUKI** | | | | | |
| GSX R 600 SRAD | | 600 | 04-05 | FD325 | FD267 |
| GSF 650 BANDIT /S IZQ. | | 650 | 05-05 | FD174 | FD267 |
| GSX R 750 SRAD | | 750 | 04-05 | FD325 | FD267 |
| GSX R 1000 | | 1000 | 01-02 | FD156 | FD267 |
| GSX R 1000 | | 1000 | 03-03 | FD290 | FD267 |
| GSX R 1000 | | 1000 | 04-04 | FD325 | FD267 |
| GSX R 1000 | | 1000 | 05-06 | FD325 | FD267 |
| GSX 1100 KATANA | | 1100 | 02- | FD156 | FD267 |
| GS 1200 SS | | 1200 | 01- | FD156 | FD267 |
| GSX 1400 | | 1400 | 01- | FD156 | FD267 |

## FD 270

mm: 50,0 x 47,2 | 6,8 | A | A

G1054 | G1380

| BRAND MARCA | MODEL MODELO | C.C. | YEAR | FRONT | REAR |
|---|---|---|---|---|---|
| **DERBI** | | | | | |
| BOULERVARD | | 150 | 03- | FD270 | MF |
| BOULERVARD | | 200 | 05- | FD270 | MF |
| **ITALJET** | | | | | |
| JET SET | | 150 | 02- | FD270 | MF |
| MILLENNIUM 150 | | 150 | 02- | FD270 | MF |
| DRAGSTER | | 250 | 07- | FD270 | FD270 |
| **PEUGEOT** | | | | | |
| ELYSEO 150 | | 150 | 01- | FD162 | FD270 |
| GEO 250 RS | | 250 | 10- | FD187 | FD270 |

## FD 271

mm: 77,3 x 51,4 | 8,6 | A | A

G1054 | G1370 | G1375

| BRAND MARCA | MODEL MODELO | C.C. | YEAR | FRONT | REAR |
|---|---|---|---|---|---|
| **BMW** | | | | | |
| R 850 R ROADSTER | | 850 | 01- | FD271 | FD186 |
| R 850 RT | | 850 | 06- | FD271 | FD186 |
| R 1100 S | | 1100 | 01- | FD271 | FD186 |
| HP 2 MEGAMOTO | | 1150 | 07- | FD271 | FD186 |
| R 1150 GS | | 1150 | 02- | FD271 | FD186 |
| R 1150 RT | | 1150 | 01- | FD271 | FD186 |
| K 1200 GT | | 1200 | 02-05 | FD271 | FD251 |
| K 1200 GT IZQ/LEFT | | 1200 | 06- | FD271 | |
| K 1200 RT | | 1200 | 06- | FD271 | FD186 |



For other models years previous to 1990 visit **www.galferonline.es** - Para otros modelos anteriores al año 1990 visitar **www.galferonline.es**
For consult TÜV (ABE) type approvals visit **www.galfermoto.com --> DOWNLOAD --> TÜV CERTIFICATIONS** - Para consultar las homologaciones TÜV (ABE) visitar **www.galfermoto.com --> DESCARGAS --> CERTIFICACIONES TÜV**

| | | | | |
|---|---|---|---|---|
| K 1200 S | 1200 | 04- | FD271 | FD186 |
| K 1200 ST | 1200 | 06-08 | FD271 | FD186 |
| K 1200 ST | 1200 | 09- | FD271 | FD186 |
| R 1200 GS | 1200 | 04-08 | FD271 | FD186 |
| R 1200 GS | 1200 | 09- | FD271 | FD186 |
| R 1200 GS ADVENTURE | 1200 | 06-08 | FD271 | FD186 |
| R 1200 GS ADVENTURE | 1200 | 09- | FD271 | FD186 |
| R 1200 RT | 1200 | 05- | FD271 | FD186 |
| R 1200 RT SE | 1200 | 10- | FD271 | FD186 |
| R 1200 S | 1200 | 06-08 | FD271 | FD186 |
| R 1200 S | 1200 | 09- | FD271 | FD186 |
| R 1200 ST | 1200 | 05-08 | FD271 | FD186 |
| R 1200 ST | 1200 | 09- | FD271 | FD186 |
| K 1300 GT | 1300 | 09- | FD271 | FD186 |
| K 1300 S | 1300 | 09- | FD271 | FD186 |

## FD 272

mm: 81,3 x 45,9 | 8,9 | A | A

G1054 | G1370

| BRAND MARCA | MODEL MODELO | C.C. | YEAR | FRONT | REAR |
|---|---|---|---|---|---|
| **BMW** | | | | | |
| R 850 R | | 850 | 04- | FD272 | FD186 |
| R 1100 S ABS | | 1100 | 01- | FD272 | FD186 |
| R 1150 GS ADVENTURE | | 1150 | 03- | FD272 | FD186 |
| R 1150 R ROCKESTER | | 1150 | 03- | FD272 | FD186 |
| R 1150 R ROADSTER | | 1150 | 01- | FD272 | FD186 |
| R 1150 RS | | 1150 | 01- | FD272 | FD186 |
| K 1200 LT | | 1200 | 01-08 | FD272 | FD251 |
| K 1200 LT | | 1200 | 09- | FD272 | FD251 |
| K 1200 RS | | 1200 | 01- | FD272 | FD044 |
| K 1200 R | | 1200 | 05- | FD272 | FD186 |
| K 1200 R SPORT | | 1200 | 07- | FD272 | FD186 |
| R 1200 C MONTAUK | | 1200 | 04- | FD272 | FD186 |
| R 1200 R | | 1200 | 06-08 | FD272 | FD186 |
| R 1200 R | | 1200 | 09-14 | FD272 | FD186 |
| K 1300 R | | 1300 | 09- | FD272 | FD186 |
| K 1600 GT | | 1600 | 11- | FD272 | FD172 |
| K 1600 GT SE | | 1600 | 12- | FD272 | FD172 |
| K 1600 GTL | | 1600 | 11- | FD272 | FD172 |
| K 1600 GTL E | | 1600 | 12- | FD272 | FD172 |
| **KAWASAKI** | | | | | |
| ZRX 400 / II | | 400 | 01- | FD272 | FD167 |

## FD 275

mm: 44,8 x 50,8 | 6,8 | A | A

G1054 | G1380 | G1397

| BRAND MARCA | MODEL MODELO | C.C. | YEAR | FRONT | REAR |
|---|---|---|---|---|---|
| **DAELIM** | | | | | |
| S3 250 Fi ADVANCE | | 250 | 12- | FD275 | FD145 |
| **KYMCO** | | | | | |
| GRAND DINK 250 | | 250 | 02- | FD275 | FD276 |
| **SYM** | | | | | |
| JOYMAX 250 i | | 250 | 07- | FD275 | FD399 |
| JOYMAX 250 i | | 250 | 07- | FD275 | FD399 |
| VOYAGER 250 | | 250 | 05- | FD275 | FD295 |
| JOYMAX 300 i EVO | | 300 | 09- | FD275 | FD399 |

## FD 276

mm: 55,4 x 45,8 | 7,0 | A | A

G1054

| BRAND MARCA | MODEL MODELO | C.C. | YEAR | FRONT | REAR |
|---|---|---|---|---|---|
| **KYMCO** | | | | | |
| GRAND DINK 250 | | 250 | 02- | FD275 | FD276 |

## FD 277

mm: 77,0 x 41,2 | 9,0 | A | B

mm: 96,9 x 41,2 | 9,0 | A | B

G1054 | G1380

| BRAND MARCA | MODEL MODELO | C.C. | YEAR | FRONT | REAR |
|---|---|---|---|---|---|
| **APRILIA** | | | | | |
| SR MAX 300 | | 300 | 12- | FD277 | FD277 |
| SRV 850 | | 850 | 12- | FD138 | FD277 |
| **GILERA-PIAGGIO** | | | | | |
| DNA 180 (H) | | 180 | 01- | FD277 | FD263 |
| MAD-MUD (H) | | 180 | 02- | FD277 | FD263 |
| RUNNER 180 FXR (H) | | 180 | 98-98 | FD277 | MF |
| RUNNER 180 VXR (H) | | 180 | 01- | FD277 | FD263 |
| RUNNER 200 VXR | | 200 | 06- | FD277 | FD263 |
| NEXUS i.e. | | 250 | 07- | FD277 | FD263 |
| NEXUS i.e. | | 300 | 09- | FD277 | FD277 |
| FUOCO 500 i.e. | | 500 | 07- | FD200 | FD277 |
| GP 800 | | 800 | 08- | FD138 | FD277 |
| **KEEWAY** | | | | | |
| K2 150 | | 150 | 07- | FD277 | FD277 |
| K2 250 | | 250 | 07- | FD277 | FD277 |
| **PEUGEOT** | | | | | |
| GEOPOLIS 250 PREMIUM | | 250 | 06- | FD277 | FD277 |
| **PIAGGIO** | | | | | |
| HEXAGON GTX 150 (H) | | 150 | 00- | FD277 | FD263 |
| SKIPPER LX (H) | | 150 | 98-99 | FD277 | MF |
| SKR 150 ST 4T (H) | | 150 | 00- | FD277 | MF |
| VESPA SUPER SPORT ABS | | 150 | 15- | FD277 | FD200 |
| HEXAGON GTX 180 (H) | | 180 | 00-00 | FD277 | FD263 |
| HEXAGON LXT 180 (H) | | 180 | 98-99 | FD277 | MF |
| SUPER HEXAGON GTX 180 (H) | | 180 | 01- | FD277 | FD263 |
| BEVERLY 200 4T (H) | | 200 | 02- | FD277 | FD277 |
| CARNABY 200 | | 200 | 07- | FD277 | FD277 |
| VESPA GRAN TURISMO (H) | | 200 | 03- | FD277 | FD263 |
| X 8 | | 200 | 04- | FD277 | FD343 |
| X 9 EVOLUTION IZQ. | | 200 | 03- | FD277 | |
| BEVERLY 250 4T (H) | | 250 | 04- | FD277 | FD277 |
| CARNABY 250 | | 250 | 09- | FD277 | FD277 |
| HEXAGON GT 250 4-T (H) | | 250 | 98-99 | FD277 | MF451 |
| HEXAGON GTX 250 (H) | | 250 | 00- | FD277 | FD263 |
| VESPA GTE 250 I | | 250 | 05- | FD277 | FD343 |
| X 7 | | 250 | 08- | FD277 | FD334 |
| X 8 | | 250 | 06- | FD277 | FD343 |
| X 9 EVOLUTION LEFT/IZQ. | | 250 | 04- | FD277 | |
| X EVO 250 | | 250 | 08- | FD277 | FD277 |
| BEVERLY 300 | | 300 | 10- | FD277 | FD334 |
| BEVERLY TOURER 300 | | 300 | 09- | FD277 | FD334 |
| CARNABY CRUISER 300 i.e. | | 300 | 09- | FD277 | FD277 |
| VESPA GTS 300 i.e. SUPER | | 300 | 09- | FD277 | FD343 |
| X 7 | | 300 | 10- | FD277 | FD334 |
| X 10 LEFT/IZQ | | 350 | 12- | FD277 | |
| MP 3 400 i.e. | | 400 | 07- | FD220 | FD277 |
| MP 3 400 LT | | 400 | 09- | FD200 | FD277 |
| X 8 i.e.w. LEFT/IZQ. | | 400 | 06- | FD277 | |
| X EVO 400 LEFT/IZQ. | | 400 | 08- | FD277 | |
| X EVO 400 RIGHT/DER. | | 400 | 08- | FD334 | FD277 |
| MP 3 500 SPORT | | 500 | 10- | FD200 | FD277 |
| X 10 LEFT/IZQ | | 500 | 12- | FD277 | |
| **SYM** | | | | | |
| CITYCOM 300 i | | 300 | 08- | FD277 | FD277 |

## FD 284

mm: 81,8 x 42,3 | 9,3 | A | A

G1054 | G1380

| BRAND MARCA | MODEL MODELO | C.C. | YEAR | FRONT | REAR |
|---|---|---|---|---|---|
| **HONDA** | | | | | |
| @ 150 | | 150 | 00- | FD284 | MF051 |
| DYLAN 150 | | 150 | 02- | FD284 | MF051 |
| PS 150i | | 150 | 06- | FD284 | MF051 |
| SH 150 SCOOPY | | 150 | 01-04 | FD284 | MF051 |
| SH 150 i SCOOPY | | 150 | 05- | FD284 | MF051 |
| SH 150 i SCOOPY (TAMBOR TRAS) | | 150 | 09- | FD284 | MF051 |
| FUSION | | 250 | 90- | FD284 | MF |
| **ITALJET** | | | | | |
| JACK 150 | | 150 | 07- | FD284 | FD284 |

## FD 286

mm: 66,85 x 36,0 | 10,5 | A | A[1]

G1054 | G1396

| BRAND MARCA | MODEL MODELO | C.C. | YEAR | FRONT | REAR |
|---|---|---|---|---|---|
| **APRILIA** | | | | | |
| SXV 550 | | 550 | 06- | | FD286 |
| **TM** | | | | | |
| SMM 530 F | | 530 | 14- | FD262 | FD286 |
| SMR 530 F | | 530 | 14- | FD262 | FD286 |
| SMX 530 F | | 530 | 10-14 | FD262 | FD286 |
| SMX 660 F | | 660 | 04-14 | FD262 | FD286 |
| SMX 660 F | | 660 | 15- | FD262 | FD286 |
| **YAMAHA** | | | | | |
| WR 250 R | | 250 | 08- | FD164 | FD286 |

## FD 290

mm: 38,7 x 49,6 | 9,0 | A (4x)

G1054 | G1370 | G1375 | G1300

| BRAND MARCA | MODEL MODELO | C.C. | YEAR | FRONT | REAR |
|---|---|---|---|---|---|
| **KAWASAKI** | | | | | |
| ZX-6RR | | 600 | 03-04 | FD290 | FD167 |
| ZX-6RR | | 600 | 05-06 | FD290 | FD167 |
| ZX-6R 636 | | 636 | 03-04 | FD290 | FD167 |
| ZX-6R 636 | | 636 | 05-12 | FD290 | FD167 |
| ZX 10R | | 1000 | 04-05 | FD290 | FD167 |
| ZX 10R | | 1000 | 06-07 | FD290 | FD167 |
| ZX-12 R | | 1200 | 04- | FD290 | FD111 |
| VN 1600 MEAN STREAK | | 1600 | 05- | FD290 | FD179 |
| **SUZUKI** | | | | | |
| GSX R 1000 | | 1000 | 03-03 | FD290 | FD267 |
| VZ 1600 INTRUDER | | 1600 | 05- | FD290 | FD179 |

## FD 291

mm 63,9 x 42,0 | 9,5 | A | A[1]

G1054 | G1396

| BRAND MARCA | MODEL MODELO | C.C. | YEAR | FRONT | REAR |
|---|---|---|---|---|---|
| **HUSABERG** | | | | | |
| 570 FS | | 570 | 10- | FD304 | FD291 |
| **HUSQVARNA** | | | | | |
| 510 SM R | | 510 | 06- | FD262 | FD291 |
| SMR 511 | | 511 | 11- | FD262 | FD291 |
| 530 RR | | 530 | 09- | FD176 | FD291 |
| 630 SMR | | 630 | 06- | FD068 | FD291 |
| STR 650 CRC | | 650 | 07- | FD262 | FD291 |
| **KTM** | | | | | |
| 560 SMR | | 560 | 07- | FD304 | FD291 |

## FD 295

mm 100,0 x 38,4 | 9,5 | A | A

G1054 | G1371

| BRAND MARCA | MODEL MODELO | C.C. | YEAR | FRONT | REAR |
|---|---|---|---|---|---|
| **HYOSUNG** | | | | | |
| GV 650 AQUILIA | | 650 | 04- | FD073 | FD295 |
| GV 1000 | | 1000 | 04- | FD073 | FD295 |
| **SYM** | | | | | |
| VOYAGER 250 | | 250 | 05- | FD275 | FD295 |
| **YAMAHA** | | | | | |
| TDM 900 | | 900 | 02-04 | FD178 | FD295 |
| TDM 900 A | | 900 | 05- | FD178 | FD295 |
| XTZ 1200 SUPER TENERE | | 1200 | 10- | FD178 | FD295 |
| XTZ 1200 SUPER TENERE ABS | | 1200 | 10- | FD178 | FD295 |
| XTZ 1200 ZE SUPER TENERE ABS | | 1200 | 14- | FD178 | FD295 |
| FJR 1300 | | 1300 | 01-02 | FD178 | FD295 |
| FJR 1300 | | 1300 | 03-05 | FD178 | FD295 |
| FJR 1300 ABS | | 1300 | 06-07 | FD372 | FD295 |
| FJR 1300 ABS | | 1300 | 08- | FD372 | FD295 |
| XVS MIDNIGHT STAR 1300 | | 1300 | 07- | FD169 | FD295 |
| V MAX 1700 | | 1700 | 09- | FD365 | FD295 |
| XV 1700 ROAD STAR WARRIOR | | 1700 | 02-07 | FD178 | FD295 |
| XV 1700 ROAD STAR WARRIOR | | 1700 | 08- | FD178 | FD295 |
| XV STAR RAIDER | | 1900 | 08- | FD178 | FD295 |
| XV 1900 STRATOLINER | | 1900 | 06- | FD178 | FD295 |
| XVS 1900 MIDNIGHT STAR | | 1900 | 06-12 | FD178 | FD295 |
| XVS 1900 MIDNIGHT STAR | | 1900 | 13- | FD372 | FD295 |

## FD 298

mm 98,5 x 33,1 | 4,6 | A | B

mm 111,2 x 36,2 | 7,6 | A | B

G1054

| BRAND MARCA | MODEL MODELO | C.C. | YEAR | FRONT | REAR |
|---|---|---|---|---|---|
| **HONDA BRAZIL** | | | | | |
| CG 150 TITAN | | 150 | 10- | FD298 | MF |
| **HONDA INDONESIA** | | | | | |
| CB 150 R STREETFIRE | | 150 | 11- | FD298 | FD259 |
| CBR 150 R | | 150 | 11- | FD298 | FD103 |
| MEGA PRO CW | | 150 | 11- | FD298 | FD259 |
| MEGA PRO SW | | 150 | 11- | FD298 | MF |
| MEGA PRO | | 160 | 10- | FD298 | MF |
| TIGER DOUBLE | | 200 | 11- | FD298 | FD259 |
| TIGER SINGLE | | 200 | 11- | FD298 | FD259 |

## FD 304

mm 35,0 x 46,0 | 7,6 | A (4x)

G1054 | G1375

| BRAND MARCA | MODEL MODELO | C.C. | YEAR | FRONT | REAR |
|---|---|---|---|---|---|
| **HUSABERG** | | | | | |
| 570 FS | | 570 | 10- | FD304 | FD291 |
| **KTM** | | | | | |
| 560 SMR | | 560 | 07- | FD304 | FD291 |
| **MAGURA** | | | | | |
| 4 PADS CALIPER SM | | | 07- | FD304 | |

## FD 315

mm 62,0 x 40,6 | 9,5 | A | B

mm 82,0 x 40,7 | 9,5 | A | B

G1054 | G1397

| BRAND MARCA | MODEL MODELO | C.C. | YEAR | FRONT | REAR |
|---|---|---|---|---|---|
| **BENELLI** | | | | | |
| CAFFE NERO DER. | | 250 | 08- | FD187 | FD315 |
| **SUZUKI** | | | | | |
| SIXTEEN | | 150 | 08- | FD344 | FD315 |
| UH 200 BURGMAN | | 200 | 07-13 | FD344 | FD315 |
| UH 200 BURGMAN | | 200 | 14- | FD117 | FD315 |
| UH 200 BURGMAN ABS | | 200 | 14- | FD117 | FD315 |

## FD 325

mm 71,4 x 50,0 | 8,0 | A | A

G1054 | G1370 | G1375 | G1003 | G1300

| BRAND MARCA | MODEL MODELO | C.C. | YEAR | FRONT | REAR |
|---|---|---|---|---|---|
| **KAWASAKI** | | | | | |
| Z 1000 | | 1000 | 10-14 | FD325 | FD167 |
| Z 1000 ABS | | 1000 | 14- | FD325 | FD167 |
| Z 1000 | | 1000 | 15- | FD325 | |
| Z 1000 SX | | 1000 | 11- | FD325 | FD167 |
| ZX 10R | | 1000 | 08-10 | FD325 | FD167 |
| ZX 10R | | 1000 | 11- | FD325 | FD363 |
| ZX 10R ABS | | 1000 | 11- | FD325 | FD363 |
| **SUZUKI** | | | | | |
| GSX R 600 SRAD | | 600 | 04-05 | FD325 | FD267 |
| GSX R 600 | | 600 | 06-07 | FD325 | FD359 |
| GSX R 600 | | 600 | 08-10 | FD325 | FD359 |
| GSX R 750 SRAD | | 750 | 04-05 | FD325 | FD267 |
| GSX R 750 | | 750 | 06-07 | FD325 | FD359 |
| GSX R 750 | | 750 | 08-10 | FD325 | FD359 |
| DL 1000 V-STORM ABS | | 1000 | 14- | FD325 | FD359 |
| GSX R 1000 | | 1000 | 04-04 | FD325 | FD267 |
| GSX R 1000 | | 1000 | 05-06 | FD325 | FD267 |
| GSX R 1000 | | 1000 | 07-08 | FD325 | FD359 |
| GSX R 1000 | | 1000 | 09-11 | FD325 | FD363 |
| GSX 1300 R HAYABUSA | | 1300 | 08-13 | FD325 | FD359 |
| M 109 R BOULEVARD | | 1800 | 06- | FD325 | FD179 |
| M 1800 RB | | 1800 | 14- | FD325 | FD179 |
| VZR 1800 INTRUDER | | 1800 | 08- | FD325 | FD179 |

## FD 326

mm 74,3 x 47,1 | 7,9 | A | A

G1054 | G1370 | G1375 | G1003 | G1300

| BRAND MARCA | MODEL MODELO | C.C. | YEAR | FRONT | REAR |
|---|---|---|---|---|---|
| **HONDA** | | | | | |
| CBR 600 RR | | 600 | 05-06 | FD326 | FD134 |
| CBR 600 RR | | 600 | 07- | FD326 | FD363 |
| CBR 600 RR | | 600 | 09- | FD326 | FD363 |
| CBR 600 RR C-ABS | | 600 | 09-12 | FD326 | FD363 |
| CBR 600 RR C-ABS | | 600 | 13- | FD326 | FD363 |
| CROSSRUNNER X | | 800 | 15- | FD326 | FD443 |
| VFR 800 ABS | | 800 | 14- | FD326 | FD443 |
| CB 1000 R | | 1000 | 08- | FD326 | FD443 |
| CBR 1000 RR FIREBLADE | | 1000 | 04-05 | FD326 | FD134 |
| CBR 1000 RR FIREBLADE | | 1000 | 06-07 | FD326 | FD363 |
| CBR 1000 RR FIREBLADE | | 1000 | 08- | FD326 | FD363 |
| CBR 1000 RR FIREBLADE C-ABS | | 1000 | 09- | FD326 | FD363 |
| **HONDA MALASIA** | | | | | |
| CBR 1000 RR FIREBLADE C-ABS | | 1000 | 09- | FD326 | FD363 |

## FD 329

mm 63,4 x 60,7 | 8,9 | A | A

G1054 | G1371

| BRAND MARCA | MODEL MODELO | C.C. | YEAR | FRONT | REAR |
|---|---|---|---|---|---|
| **YAMAHA** | | | | | |
| FZ 1 (USA) | | 1000 | 98-05 | FD178 | FD329 |
| FZS 1000 FAZER | | 1000 | 98-05 | FD178 | FD329 |
| XJR 1300 | | 1300 | 01- | FD178 | FD329 |
| XJR 1300 RACER | | 1300 | 15- | FD178 | FD329 |

## FD 331

mm 69,5 x 49,6 | 7,0 | A | A

G1054 | G1370 | G1375 | G1300

| BRAND MARCA | MODEL MODELO | C.C. | YEAR | FRONT | REAR |
|---|---|---|---|---|---|
| **HONDA** | | | | | |
| NSF 250 R | | 250 | 12- | FD331 | FD113 |
| **KAWASAKI** | | | | | |
| Z 800 | | 800 | 13- | FD331 | FD103 |
| Z 800 ABS | | 800 | 13- | FD331 | FD103 |
| Z 800e ABS | | 800 | 13- | FD331 | FD103 |
| ZX-9R NINJA | | 900 | 02- | FD331 | FD167 |
| Z 1000 | | 1000 | 03-06 | FD331 | FD167 |
| **KAWASAKI MALASIA** | | | | | |
| Z 800 | | 800 | 13- | FD331 | FD103 |
| Z 800 ABS | | 800 | 13- | FD331 | FD103 |
| Z 800e ABS | | 800 | 13- | FD331 | FD103 |
| **SUZUKI** | | | | | |
| B-KING | | 1300 | 07- | FD331 | FD359 |
| **TRIUMPH** | | | | | |
| DAYTONA TRIPLE | | 675 | 06-08 | FD331 | FD103 |
| STREET TRIPLE R | | 675 | 09-12 | FD331 | FD103 |
| STREET TRIPLE R | | 675 | 13- | FD331 | FD103 |
| STREET TRIPLE RX | | 675 | 15- | FD331 | FD103 |
| SPEED TRIPLE 1050 | | 1050 | 06-07 | FD331 | FD086 |
| SPRINT ST 1050 | | 1050 | 06- | FD331 | FD086 |
| TIGER 1050 | | 1050 | 07- | FD331 | FD117 |
| TIGER 1050 ABS | | 1050 | 07- | FD331 | FD117 |
| TIGER SPORT 1050 ABS | | 1050 | 13- | FD331 | FD117 |
| **VICTORY** | | | | | |
| CORY NESS CROOS COUNTRY | | 1500 | 11- | FD331 | FD140 |
| CROSS COUNTRY | | 1500 | 10- | FD331 | FD140 |
| CROSS ROADS | | 1500 | 10- | FD331 | FD140 |



For other models years previous to 1990 visit **www.galferonline.es** - Para otros modelos anteriores al año 1990 visitar **www.galferonline.es**

For consult TÜV (ABE) type approvals visit **www.galfermoto.com --> DOWNLOAD --> TÜV CERTIFICATIONS** - Para consultar las homologaciones TÜV (ABE) visitar **www.galfermoto.com --> DESCARGAS --> CERTIFICACIONES TÜV**

| | | | | |
|---|---|---|---|---|
| GUNNER | 1700 | 15- | FD331 | FD172 |
| HAMMER / S | 1500 | 08- | FD331 | FD140 |
| HIGH BALL | 1700 | 15- | FD331 | FD172 |
| JACKPOT | 1500 | 10- | FD331 | FD140 |
| JUDGE | 1700 | 15- | FD331 | FD172 |
| KING PIN | 1500 | 08- | FD331 | FD140 |
| VEGAS | 1500 | 08- | FD331 | FD140 |

## FD 334

mm: 77,0 x 41,2 — A: 9,0 — B

mm: 96,9 x 41,2 — A — B: 9,0

G1054 | G1380

| BRAND MARCA | MODEL MODELO | C.C. | YEAR | FRONT | REAR |
|---|---|---|---|---|---|
| **PIAGGIO** | | | | | |
| X 9 EVOLUTION DER. | | 200 | 03- | FD334 | FD220 |
| MP 3 250 LT | | 250 | 09- | FD200 | FD334 |
| X 7 | | 250 | 08- | FD277 | FD334 |
| X 9 EVOLUTION RIGHT/DER. | | 250 | 04- | FD334 | FD220 |
| BEVERLY 300 | | 300 | 10- | FD277 | FD334 |
| BEVERLY TOURER 300 | | 300 | 09- | FD277 | FD334 |
| MP 3 300 LT SPORT | | 300 | 11- | FD200 | FD334 |
| MP 3 300 YOURBAN | | 300 | 11- | FD200 | FD334 |
| MP 3 300 ie YOURBAN | | 300 | 13- | FD200 | FD334 |
| X 7 | | 300 | 10- | FD277 | FD334 |
| BEVERLY SPORT TOURER | | 350 | 12- | FD245 | FD334 |
| X 10 RIGHT/DER | | 350 | 12- | FD334 | FD343 |
| X 8 i.e.w. RIGHT/DER. | | 400 | 06- | FD334 | FD220 |
| X EVO 400 RIGHT/DER. | | 400 | 08- | FD334 | FD277 |
| X 10 RIGHT/DER | | 500 | 12- | FD334 | FD343 |

## FD 336

mm: 73,0 x 47,0 — A: 10,8 — B

mm: 94,1 x 47,0 — A — B: 8,6

G1054 | G1397

| BRAND MARCA | MODEL MODELO | C.C. | YEAR | FRONT | REAR |
|---|---|---|---|---|---|
| **SYM** | | | | | |
| WOLF SB 250 Ni | | 250 | 15- | FD399 | FD336 |
| WOLF SB 300 | | 300 | 15- | FD399 | FD336 |
| WOLF SB 300 CR | | 300 | 15- | FD399 | FD336 |

## FD 339

mm: 102,0 x 45,9 — A: 10,0 — A[1]

G1370

| BRAND MARCA | MODEL MODELO | C.C. | YEAR | FRONT | REAR |
|---|---|---|---|---|---|
| **HARLEY DAVIDSON** | | | | | |
| XL 50th ANIVERSARIO | | 883 | 07- | FD339 | FD340 |
| XL IRON | | 883 | 09- | FD339 | FD340 |
| XL ROADSTER | | 883 | 10- | FD339 | FD340 |
| XL SPORTSTER CUSTOM | | 883 | 04- | FD339 | FD340 |
| XL SPORTSTER LOW | | 883 | 04- | FD339 | FD340 |
| XL SPORTSTER R | | 883 | 05- | FD339 | FD340 |
| XL SPORTSTER STANDARD | | 883 | 04- | FD339 | FD340 |
| XLH SPORTSTER R | | 883 | 05- | FD339 | FD340 |
| XL L SUPERLOW | | 883 | 11- | FD339 | FD340 |
| XL NIGHTSTER | | 1200 | 08- | FD339 | FD340 |
| XL ROADSTER | | 1200 | 04- | FD339 | FD340 |
| XL SPORTSTER CUSTOM | | 1200 | 04- | FD339 | FD340 |
| XL SPORTSTER LOW | | 1200 | 07- | FD339 | FD340 |
| XL 1200 V SEVENTY-TWO | | 1200 | 12- | FD339 | FD340 |
| XL 1200 X FORTY EIGHT | | 1200 | 10- | FD339 | FD340 |
| **KAWASAKI** | | | | | |
| VULCAN S | | 650 | 15- | FD339 | FD340 |

## FD 340

mm: 86,0 x 44,5 — A: 10,4 — A[1]

G1371

| BRAND MARCA | MODEL MODELO | C.C. | YEAR | FRONT | REAR |
|---|---|---|---|---|---|
| **HARLEY DAVIDSON** | | | | | |
| XL 50th ANIVERSARIO | | 883 | 07- | FD339 | FD340 |
| XL IRON | | 883 | 09- | FD339 | FD340 |
| XL ROADSTER | | 883 | 10- | FD339 | FD340 |
| XL SPORTSTER CUSTOM | | 883 | 04- | FD339 | FD340 |
| XL SPORTSTER LOW | | 883 | 04- | FD339 | FD340 |
| XL SPORTSTER R | | 883 | 05- | FD339 | FD340 |
| XL SPORTSTER STANDARD | | 883 | 04- | FD339 | FD340 |
| XLH SPORTSTER R | | 883 | 05- | FD339 | FD340 |
| XL L SUPERLOW | | 883 | 11- | FD339 | FD340 |
| XL NIGHTSTER | | 1200 | 08- | FD339 | FD340 |
| XL ROADSTER | | 1200 | 04- | FD339 | FD340 |
| XL SPORTSTER CUSTOM | | 1200 | 04- | FD339 | FD340 |
| XL SPORTSTER LOW | | 1200 | 07- | FD339 | FD340 |
| XL 1200 V SEVENTY-TWO | | 1200 | 12- | FD339 | FD340 |
| XL 1200 X FORTY EIGHT | | 1200 | 10- | FD339 | FD340 |
| XR 1200 | | 1200 | 08-10 | FD219 | FD340 |
| XR 1200 R | | 1200 | 10- | FD219 | FD340 |
| XR 1200 X | | 1200 | 10- | FD219 | FD340 |
| **KAWASAKI** | | | | | |
| VULCAN S | | 650 | 15- | FD339 | FD340 |

## FD 343

mm: 55,3 x 52,1 — A: 7,6 — A

G1054 | G1380

| BRAND MARCA | MODEL MODELO | C.C. | YEAR | FRONT | REAR |
|---|---|---|---|---|---|
| **PIAGGIO** | | | | | |
| X 8 | | 200 | 04- | FD277 | FD343 |
| MP 3 250 | | 250 | 06-08 | FD200 | FD343 |
| VESPA GTE 250 I | | 250 | 05- | FD277 | FD343 |
| X 8 | | 250 | 06- | FD277 | FD343 |
| VESPA GTS 300 i.e. SUPER | | 300 | 09- | FD277 | FD343 |
| X 10 RIGHT/DER | | 350 | 12- | FD334 | FD343 |
| X 10 RIGHT/DER | | 500 | 12- | FD334 | FD343 |

## FD 344

mm: 118,0 x 45,2 — A: 9,2 — A[1]

G1054 | G1370 | G1375 | G1380

| BRAND MARCA | MODEL MODELO | C.C. | YEAR | FRONT | REAR |
|---|---|---|---|---|---|
| **HONDA** | | | | | |
| S WING 150 | | 150 | 07- | FD344 | FD345 |
| SH 150 i SCOOPY (D-D) | | 150 | 09- | FD344 | FD345 |
| SH 150 i SCOOPY ABS | | 150 | 13- | FD344 | FD345 |
| CBR 250 R C-ABS | | 250 | 11- | FD344 | FD457 |
| FAZE 250 | | 250 | 10- | FD344 | FD345 |
| FES 250 FORZA EX | | 250 | 05- | FD344 | FD345 |
| FES 250 FORZA X / Z | | 250 | 05- | FD344 | FD345 |
| NSS 300 FORZA | | 300 | 13- | FD344 | FD345 |
| SH SCOOPY 300 | | 300 | 07-10 | FD344 | FD345 |
| SH SCOOPY 300 | | 300 | 11- | FD344 | FD345 |
| SH SCOOPY 300 ABS | | 300 | 07- | FD344 | FD345 |
| CB 300 R ABS | | 300 | 10- | FD344 | FD134 |
| XRE 300 C-ABS | | 300 | 10- | FD344 | FD093 |
| SILVER WING T 400 | | 400 | 09- | FD344 | FD140 |
| CBF 500 ABS | | 500 | 04- | FD344 | FD134 |
| 599 (USA) ABS | | 600 | 07- | FD344 | FD134 |
| CB 600 HORNET ABS | | 600 | 07- | FD344 | FD134 |
| CBF 600 S ABS | | 600 | 08- | FD344 | FD134 |
| CBR 600 F ABS | | 600 | 11- | FD344 | FD363 |
| SW-T 600 | | 600 | 11- | FD344 | FD140 |
| DN - 01 | | 680 | 08-09 | FD344 | FD140 |
| DN - 01 CONCEPT | | 680 | 10- | FD344 | FD140 |
| INTEGRA | | 700 | 12- | FD344 | FD134 |
| NC 700 S ABS | | 700 | 12- | FD344 | FD134 |
| NC 700 X ABS | | 700 | 12- | FD344 | FD134 |
| NTV 700 V DEAUVILLE | | 700 | 06- | FD344 | FD207 |
| XL 700 V TRANSALP IZQ. ABS | | 700 | 08- | FD344 | |
| XL 700 V TRANSALP DER. ABS | | 700 | 08- | FD344 | FD134 |
| CROSSRUNNER X | | 800 | 11-14 | FD344 | FD443 |
| VFR 800 | | 800 | 06- | FD344 | FD207 |
| VFR 800 ABS | | 800 | 06-13 | FD344 | FD207 |
| CB 1000 R ABS | | 1000 | 08- | FD344 | FD443 |
| CBF 1000 ABS | | 1000 | 06- | FD344 | FD134 |
| VARADERO ABS | | 1000 | 04- | FD344 | FD207 |
| CB 1100 | | 1100 | 13- | FD344 | FD134 |
| VFR 1200 X CROSSTOURER | | 1200 | 12- | FD344 | FD344 |
| VFR 1200 X CROSSTOURER DCT | | 1200 | 12- | FD344 | FD344 |
| CB 1300 F | | 1300 | 10- | FD344 | FD134 |
| CB 1300 S | | 1300 | 10- | FD344 | FD134 |
| CTX 1300 C ABS | | 1300 | 14- | FD344 | FD207 |
| ST 1300 PAN-EUROPEAN ABS | | 1300 | 08- | FD344 | FD207 |
| VT 1300 CS ABS | | 1300 | 10- | FD344 | FD205 |
| VT 1300 CX ABS | | 1300 | 10- | FD344 | FD205 |
| GL 1800 GOLD WING 12YM | | 1800 | 12- | FD344 | FD344 |
| GL 1800 GOLD WING F6B | | 1800 | 13- | FD344 | FD344 |
| GL 1800 GOLD WING F6 40th | | 1800 | 15- | FD344 | FD344 |
| **HONDA BRAZIL** | | | | | |
| XRE 300 C-ABS | | 300 | 10- | FD344 | FD093 |
| CB 300 R ABS | | 300 | 10- | FD344 | FD134 |
| **HONDA INDONESIA** | | | | | |
| CBR 250 R C-ABS | | 250 | 11- | FD344 | FD457 |
| **HONDA MALASIA** | | | | | |
| CBR 250 R C-ABS | | 250 | 11- | FD344 | FD103 |
| GL 1800 GOLD WING F6B | | 1800 | 13- | FD344 | FD344 |
| **SUZUKI** | | | | | |
| SIXTEEN | | 150 | 08- | FD344 | FD315 |
| UH 200 BURGMAN | | 200 | 07-13 | FD344 | FD315 |

## FD 345

mm: 81,7 x 37,7 — A: 8,8 — A

G1054 | G1380

| BRAND MARCA | MODEL MODELO | C.C. | YEAR | FRONT | REAR |
|---|---|---|---|---|---|
| **HONDA** | | | | | |
| S WING 150 | | 150 | 07- | FD344 | FD345 |
| SH 150 i SCOOPY (D-D) | | 150 | 09- | FD344 | FD345 |
| SH 150 i SCOOPY ABS | | 150 | 13- | FD344 | FD345 |
| SH 150 i SCOOPY CBS | | 150 | 13- | FD266 | FD345 |
| FAZE 250 | | 250 | 10- | FD344 | FD345 |
| FES 250 FORZA EX | | 250 | 05- | FD344 | FD345 |
| FES 250 FORZA X / Z | | 250 | 05- | FD344 | FD345 |
| NSS 300 FORZA | | 300 | 13- | FD344 | FD345 |
| SH SCOOPY 300 | | 300 | 07-10 | FD344 | FD345 |
| SH SCOOPY 300 | | 300 | 11- | FD344 | FD345 |
| SH SCOOPY 300 ABS | | 300 | 07- | FD344 | FD345 |

## FD 352

mm: 100,0 x 38,1 | 12,0 | A | A

G1054 | G1380

| BRAND MARCA | MODEL MODELO | C.C. | YEAR | FRONT | REAR |
|---|---|---|---|---|---|
| **MBK MOTOBEKANE** | | | | | |
| SKYLINER | | 400 | 04- | FD142 | FD352 |
| **YAMAHA** | | | | | |
| SP 400 MAGESTY | | 400 | 04-04 | FD142 | FD352 |
| SP 400 MAGESTY | | 400 | 05- | FD169 | FD352 |
| SP 400 GRAND MAJESTY (JAP) | | 400 | 05- | FD169 | FD352 |
| XP 500 T-MAX | | 500 | 04-07 | FD169 | FD352 |
| XP 500 T-MAX ABS | | 500 | 04-07 | FD169 | FD352 |
| XP 500 T-MAX | | 500 | 08- | FD178 | FD352 |
| XP 500 T-MAX ABS | | 500 | 08- | FD178 | FD352 |
| XP 500 T-MAX BLACK MAX | | 500 | 06-07 | FD169 | FD352 |
| XVS 950 A MIDNIGHT STAR | | 950 | 09- | FD142 | FD352 |
| XVS 950 | | 950 | 13- | FD142 | FD352 |
| XVS 950 R | | 950 | 13- | FD142 | FD352 |
| XVS 950 BOLT (USA) | | 950 | 13- | FD142 | FD352 |

## FD 355

mm: 94,0 x 39,9 | 7,5 | A | A[1]

G1054 | G1380

| BRAND MARCA | MODEL MODELO | C.C. | YEAR | FRONT | REAR |
|---|---|---|---|---|---|
| **YAMAHA** | | | | | |
| X - MAX 250 | | 250 | 05-09 | FD355 | FD214 |

## FD 356

mm: 39,7 x 44,5 | 7,0 | A | A

G1054

| BRAND MARCA | MODEL MODELO | C.C. | YEAR | FRONT | REAR |
|---|---|---|---|---|---|
| **AP LOCKHEED** | | | | | |
| REAR CALIPER 2P (CP7003/4226/7-2S0) | | | - | | FD356 |

## FD 359

mm: 89,2 x 40,6 | 9,8 | A | A[1]

G1054 | G1371

| BRAND MARCA | MODEL MODELO | C.C. | YEAR | FRONT | REAR |
|---|---|---|---|---|---|
| **SUZUKI** | | | | | |
| GSR 400 | | 400 | 06- | FD107 | FD359 |
| GSR 600 | | 600 | 06- | FD107 | FD359 |
| GSX R 600 | | 600 | 06-07 | FD325 | FD359 |
| GSX R 600 | | 600 | 08-10 | FD325 | FD359 |
| GSX R 750 | | 750 | 06-07 | FD325 | FD359 |
| GSX R 750 | | 750 | 08-10 | FD325 | FD359 |
| DL 1000 V-STORM ABS | | 1000 | 14- | FD325 | FD359 |
| GSX R 1000 | | 1000 | 07-08 | FD325 | FD359 |
| B-KING | | 1300 | 07- | FD331 | FD359 |
| GSX 1300 R HAYABUSA | | 1300 | 08-13 | FD325 | FD359 |
| GSX 1300 R HAYABUSA | | 1300 | 14- | FD373 | FD359 |

## FD 363

mm: 77,5 x 42,1 | 10,4 | A | A[1]

G1054 | G1371

| BRAND MARCA | MODEL MODELO | C.C. | YEAR | FRONT | REAR |
|---|---|---|---|---|---|
| **HONDA** | | | | | |
| 599 (USA) | | 600 | 07- | FD266 | FD363 |
| CB 600 HORNET | | 600 | 07- | FD266 | FD363 |
| CBR 600 F | | 600 | 11- | FD266 | FD363 |
| CBR 600 F ABS | | 600 | 11- | FD344 | FD363 |
| CBR 600 RR | | 600 | 07- | FD326 | FD363 |
| CBR 600 RR | | 600 | 09- | FD326 | FD363 |
| CBR 600 RR C-ABS | | 600 | 09-12 | FD326 | FD363 |
| CBR 600 RR C-ABS | | 600 | 13- | FD326 | FD363 |
| CBR 1000 RR FIREBLADE | | 1000 | 06-07 | FD326 | FD363 |
| CBR 1000 RR FIREBLADE | | 1000 | 08- | FD326 | FD363 |
| CBR 1000 RR FIREBLADE C-ABS | | 1000 | 09- | FD326 | FD363 |
| CBR 1000 RR FIREBLADE SP | | 1000 | 14-14 | FD373 | FD363 |
| CBR 1000 RR FIREBLADE SP | | 1000 | 15- | FD475 | FD363 |
| **HONDA MALASIA** | | | | | |
| CBR 1000 RR FIREBLADE C-ABS | | 1000 | 09- | FD326 | FD363 |
| **KAWASAKI** | | | | | |
| ZX-6R 636 | | 636 | 13- | FD219 | FD363 |
| ZX-6R 636 ABS | | 636 | 13- | FD219 | FD363 |
| ZX 10R | | 1000 | 11- | FD325 | FD363 |
| ZX 10R ABS | | 1000 | 11- | FD325 | FD363 |
| **SUZUKI** | | | | | |
| GSX R 600 | | 600 | 11- | FD373 | FD363 |
| GSX R 750 | | 750 | 11- | FD373 | FD363 |
| GSX R 1000 | | 1000 | 09-11 | FD325 | FD363 |
| GSX R 1000 | | 1000 | 12- | FD373 | FD363 |
| **YAMAHA** | | | | | |
| YZF - R1 | | 1000 | 15- | FD178 | FD363 |
| YZF - R1M | | 1000 | 15- | FD178 | FD363 |

## FD 365

mm: 30,9 x 48,0 | 8,5 | A (2x)

mm: 61,9 x 44,8 | 8,5 | B (2x)

G1375 | G1300

| BRAND MARCA | MODEL MODELO | C.C. | YEAR | FRONT | REAR |
|---|---|---|---|---|---|
| **YAMAHA** | | | | | |
| YZF 1.000 R-1 | | 1000 | 07-08 | FD365 | FD134 |
| YZF 1.000 R-1 | | 1000 | 09-11 | FD365 | FD134 |
| YZF 1.000 R-1 TCS | | 1000 | 12-14 | FD365 | FD134 |
| MT 01 | | 1650 | 07- | FD365 | FD140 |
| V MAX 1700 | | 1700 | 09- | FD365 | FD295 |

## FD 367

mm: 68,6 x 55,6 | 8,8 | A | A

G1054 | G1375

| BRAND MARCA | MODEL MODELO | C.C. | YEAR | FRONT | REAR |
|---|---|---|---|---|---|
| **APRILIA** | | | | | |
| DORSODURO | | 750 | 08- | FD367 | FD165 |
| DORSODURO FACTORY | | 750 | 10- | FD367 | FD165 |
| SHIVER | | 750 | 07- | FD367 | FD165 |
| SHIVER SL GT / ABS | | 750 | 09- | FD367 | FD165 |
| MANA | | 850 | 07- | FD367 | FD165 |
| MANA GT / ABS | | 850 | 09- | FD367 | FD165 |
| MANA X / ABS | | 850 | 10- | FD367 | FD195 |

| BRAND MARCA | MODEL MODELO | C.C. | YEAR | FRONT | REAR |
|---|---|---|---|---|---|
| **KYMCO** | | | | | |
| XCITING 400 | | 400 | 12- | FD367 | FD266 |

## FD 369

mm: 91,9 x 58,5 | 7,0 | A | A[1]

G1370

| BRAND MARCA | MODEL MODELO | C.C. | YEAR | FRONT | REAR |
|---|---|---|---|---|---|
| **HARLEY DAVIDSON** | | | | | |
| FLHTC/i ELECTRA GLIDE CLASSIC | | 1340 | 08- | FD369 | FD369 |
| FLHR ROAD KING | | 1450 | 08- | FD369 | FD369 |
| FLHRC ROAD KING CLASSIC | | 1450 | 08- | FD369 | FD369 |
| FLHT ELECTRA GLIDE STANDARD | | 1450 | 08- | FD369 | FD369 |
| FLHTC ELECTRA GLIDE CLASSIC | | 1450 | 08- | FD369 | FD369 |
| FLHTCU ULTRA CLASSIC ELECTRA GLIDE | | 1450 | 08-13 | FD369 | FD369 |
| FLHTCU ULTRA CLASSIC ELECTRA GLIDE | | 1450 | 14- | FD369 | FD369 |
| FLHTK ELECTRA GLIDE ULTRA LTD | | 1450 | 10- | FD369 | FD369 |
| FLHTP ELECTRA GLIDE STD. POLICE | | 1450 | 14- | FD369 | FD369 |
| FLHX/i STREET GLIDE | | 1450 | 08-13 | FD369 | FD369 |
| FLHX/i STREET GLIDE | | 1450 | 14- | FD369 | FD369 |
| FLTR ROAD GLIDE | | 1450 | 08- | FD369 | FD369 |
| FLTRU ROAD GLIDE ULTRA | | 1450 | 11- | FD369 | FD369 |
| FLTRX ROAD GLIDE CUSTOM | | 1450 | 10- | FD369 | FD369 |
| V-ROD (BREMBO CALIPER) | | 1185 | 06- | FD369 | FD369 |
| VRSCAW V-ROD | | 1185 | 07-07 | FD369 | FD369 |
| VRSCAW V-ROD | | 1185 | 08- | FD369 | FD369 |
| VRSCD NIGHT ROD | | 1185 | 05-08 | FD369 | FD369 |
| VRSCDX NIGHT ROD SPECIAL | | 1185 | 07- | FD369 | FD369 |
| VRSCF V-ROD MUSCLE | | 1185 | 08- | FD369 | FD369 |
| VRSCR STREET ROD | | 1185 | 05-07 | FD369 | FD369 |
| VRSCX V-ROD | | 1185 | 07-07 | FD369 | FD369 |
| VRSCX V-ROD 10th ANNIVERSARY | | 1185 | 12- | FD369 | FD369 |

## FD 371

mm: 37,7 x 49,9 | 7,8 | A (4x)

G1370 | G1375 | G1003 | G1300

| BRAND MARCA | MODEL MODELO | C.C. | YEAR | FRONT | REAR |
|---|---|---|---|---|---|
| **KAWASAKI** | | | | | |
| ZX-6R | | 600 | 07-08 | FD371 | FD167 |
| ZX-6R | | 600 | 09- | FD371 | FD167 |
| Z 750 R | | 750 | 11- | FD371 | FD103 |
| Z 750 R SE | | 750 | 12- | FD371 | FD103 |
| Z 1000 | | 1000 | 07-08 | FD371 | FD134 |
| Z 1000 | | 1000 | 08-09 | FD371 | FD134 |
| GTR 1400 | | 1400 | 07-09 | FD371 | FD267 |
| GTR 1400 | | 1400 | 10- | FD371 | FD267 |
| GTR 1400 GRAND TOUR | | 1400 | 10- | FD371 | FD267 |
| ZG 1400 CONCOURS | | 1400 | 08- | FD371 | FD267 |
| ZG 1400 CONCOURS ABS | | 1400 | 08-09 | FD371 | FD267 |
| ZG 1400 CONCOURS ABS | | 1400 | 10- | FD371 | FD267 |
| ZZR 1400 | | 1400 | 06-11 | FD371 | FD267 |
| ZZR 1400 | | 1400 | 12- | FD371 | FD267 |
| ZX-14 R | | 1400 | 06- | FD371 | FD267 |
| ZX-14 R ABS | | 1400 | 14- | FD371 | FD267 |
| **KAWASAKI INDONESIA** | | | | | |
| ZX-6R | | 600 | 09- | FD371 | FD167 |

## FD 372

mm: 44,8 x 53,6 | 8,7 | A (4x)

G1370 | G1375

| BRAND MARCA | MODEL MODELO | C.C. | YEAR | FRONT | REAR |
|---|---|---|---|---|---|
| **TRIUMPH** | | | | | |



For other models years previous to 1990 visit **www.galferonline.es** · Para otros modelos anteriores al año 1990 visitar **www.galferonline.es**
For consult TÜV (ABE) type approvals visit **www.galfermoto.com --> DOWNLOAD --> TÜV CERTIFICATIONS** · Para consultar las homologaciones TÜV (ABE) visitar **www.galfermoto.com --> DESCARGAS --> CERTIFICACIONES TÜV**

| | | | | |
|---|---|---|---|---|
| TROPHY 1200 | 1215 | 13- | FD372 | FD086 |
| **YAMAHA** | | | | |
| FJR 1300 ABS | 1300 | 06-07 | FD372 | FD295 |
| FJR 1300 ABS | 1300 | 08- | FD372 | FD295 |
| XVS 1900 MIDNIGHT STAR | 1900 | 13- | FD372 | FD295 |

## FD 373

mm: 102,2 x 41,9 | 7,5 | A | A

G1370 G1375 | G1003 | G1300 |

| BRAND MARCA | MODEL MODELO | C.C. | YEAR | FRONT | REAR |
|---|---|---|---|---|---|
| **APRILIA** | | | | | |
| RSV4 FACTORY | | 1000 | 09- | FD373 | FD220 |
| RSV4 R | | 1000 | 09-14 | FD373 | FD220 |
| RSV4 RR | | 1000 | 15- | FD373 | FD220 |
| **BIMOTA** | | | | | |
| BB3 | | 1000 | 14- | FD373 | FD392 |
| DB 7 | | 1100 | 09- | FD373 | FD220 |
| DB 8 | | 1198 | 10- | FD373 | FD220 |
| DB 8 SP | | 1198 | 13- | FD373 | FD220 |
| DB 11 / VLX | | 1198 | 13- | FD373 | FD220 |
| **BMW** | | | | | |
| HP 4 | | 1000 | 12- | FD373 | FD165 |
| HP 2 SPORT | | 1150 | 08- | FD373 | FD186 |
| **BREMBO RACING** | | | | | |
| 2209885** | | | - | FD373 | |
| 220A397** | | | - | FD373 | |
| 220B010** | | | - | FD373 | |
| **DUCATI** | | | | | |
| 848 EVO | | 848 | 10- | FD373 | FD220 |
| 848 EVO CORSE SE | | 848 | 12- | FD373 | FD220 |
| 848 STREETFIGHTER EVO SP | | 848 | 12- | FD373 | FD220 |
| DESMOSEDICI RR | | 989 | 07- | FD373 | FD220 |
| 1098 | | 1100 | 07-08 | FD373 | FD220 |
| 1098 S | | 1100 | 07-08 | FD373 | FD220 |
| HYPERMOTARD EVO SP | | 1100 | 10- | FD373 | FD220 |
| HYPERMOTARD S | | 1100 | 07-09 | FD373 | FD220 |
| STREETFIGHTER | | 1100 | 09- | FD373 | FD220 |
| STREETFIGHTER S | | 1100 | 09- | FD373 | FD220 |
| 1198 | | 1198 | 10- | FD373 | FD220 |
| 1198 R SP | | 1198 | 09- | FD373 | FD220 |
| 1198 S | | 1198 | 09- | FD373 | FD220 |
| 1199 PANIGALE | | 1199 | 12- | FD373 | FD220 |
| 1199 PANIGALE RS13 | | 1199 | 13- | FD373 | FD220 |
| 1199 PANIGALE SUPERLEGGERA | | 1199 | 14- | FD373 | FD220 |
| DIAVEL 1200 | | 1200 | 11- | FD373 | FD172 |
| DIAVEL STRADA 1200 | | 1200 | 13- | FD373 | FD172 |
| MONSTER 1200 S | | 1200 | 14- | FD373 | FD220 |
| MULTISTRADA 1200 S | | 1200 | 15- | FD373 | FD172 |
| MULTISTRADA 1200 S D air | | 1200 | 15- | FD373 | FD172 |
| 1299 PANIGALE | | 1299 | 15- | FD373 | FD220 |
| 1299 PANIGALE R | | 1299 | 15- | FD373 | FD220 |
| 1299 PANIGALE S | | 1299 | 15- | FD373 | FD220 |
| **HONDA** | | | | | |
| CBR 1000 RR FIREBLADE SP | | 1000 | 14-14 | FD373 | FD363 |
| RC 213 V | | 1000 | 15- | FD373 | FD220 |
| **HUSQVARNA** | | | | | |
| NUDA 900 R | | 900 | 11- | FD373 | FD165 |
| **KAWASAKI** | | | | | |
| NINJA H2 (200cv) | | 1000 | 15- | FD373 | FD220 |
| NINJA H2 R (310cv) | | 1000 | 15- | FD373 | FD220 |
| **KTM** | | | | | |
| 690 DUKE R | | 690 | 13- | FD373 | FD165 |
| 990 SM R | | 990 | 09- | FD373 | FD138 |
| 990 SUPERMOTO / R | | 990 | 10- | FD373 | FD138 |
| RC 8 | | 1190 | 08- | FD373 | FD220 |
| RC 8 R | | 1190 | 09- | FD373 | FD220 |
| 1290 SUPER DUKE R | | 1290 | 13- | FD373 | FD220 |
| **MOTO GUZZI** | | | | | |
| V 12 LE MANS | | 1200 | 10- | FD373 | FD138 |
| V 12 STRADA | | 1200 | 10- | FD373 | FD138 |
| V 12 X | | 1200 | 10- | FD373 | FD138 |
| **MOTO MORINI** | | | | | |
| GRANFERRO | | 1200 | 10- | FD373 | FD138 |
| **MV AGUSTA** | | | | | |
| F3 675 SERIE ORO | | 675 | 12- | FD373 | FD220 |
| F-4 1000 | | 1000 | 07- | FD373 | FD486 |
| BRUTALE 1078 | | 1078 | 08- | FD373 | FD486 |
| F-4 312 RR | | 1078 | 08- | FD373 | FD486 |
| F-4 1078 RR | | 1078 | 08-09 | FD373 | FD486 |
| BRUTALE CORSA 1090 | | 1078 | 14- | FD373 | FD486 |
| BRUTALE 1090 R | | 1078 | 10-12 | FD373 | FD486 |
| BRUTALE 1090 RR | | 1078 | 13- | FD373 | FD220 |
| F-4 1090 RR | | 1078 | 10-11 | FD373 | FD486 |
| F-4 RR CORSA CORTA | | 1078 | 12- | FD373 | FD486 |
| **SUZUKI** | | | | | |
| GSX R 600 | | 600 | 11- | FD373 | FD363 |
| GSX R 750 | | 750 | 11- | FD373 | FD363 |
| GSX-S 1000 ABS | | 1000 | 15- | FD373 | FD134 |
| GSX-S 1000 F ABS | | 1000 | 15- | FD373 | FD134 |
| GSX R 1000 | | 1000 | 12- | FD373 | FD363 |
| GSX 1300 R HAYABUSA | | 1300 | 14- | FD373 | FD359 |
| **TRIUMPH** | | | | | |
| DAYTONA 675 R | | 675 | 11-12 | FD373 | FD103 |
| DAYTONA 675 R | | 675 | 13- | FD373 | FD103 |
| SPEED TRIPLE R | | 1050 | 12- | FD373 | FD086 |

## FD 374

mm: 102,9 x 37,3 | 8,5 | A | B

mm: 94,0 x 37,3 | 8,4 | A | B

G1054 |

| BRAND MARCA | MODEL MODELO | C.C. | YEAR | FRONT | REAR |
|---|---|---|---|---|---|
| **BMW** | | | | | |
| K 1200 GT DER/RIGHT | | 1200 | 06- | FD377 | FD374 |

## FD 375

mm: 97,9 x 64,2 | 8,0 | A | B

mm: 97,9 x 64,2 | 8,0 | A | B

G1054 |

| BRAND MARCA | MODEL MODELO | C.C. | YEAR | FRONT | REAR |
|---|---|---|---|---|---|
| **HARLEY DAVIDSON** | | | | | |
| FXDXT SUPER GLIDE T SPORT | | 1340 | 01- | FD375 | FD235 |
| FLSTSC/i SPRINGER CLASSIC SOFTAIL | | 1450 | 06- | FD124 | FD375 |

## FD 377

mm: 77,3 x 51,4 | 8,5 | A | B

mm: 77,3 x 51,4 | 8,5 | A | B

G1054 | G1370 |

| BRAND MARCA | MODEL MODELO | C.C. | YEAR | FRONT | REAR |
|---|---|---|---|---|---|
| **BMW** | | | | | |
| K 1200 GT DER/RIGHT | | 1200 | 06- | FD377 | FD374 |

## FD 384

mm: 92,0 x 51,5 | 8,0 | A | A

G1054 | G1375 |

| BRAND MARCA | MODEL MODELO | C.C. | YEAR | FRONT | REAR |
|---|---|---|---|---|---|
| **BUELL** | | | | | |
| M2 CYCLONE | | 1200 | 00- | FD384 | FD103 |
| S3 THUNDERBOLT | | 1200 | 00- | FD384 | FD103 |
| X1 LIGHTNING | | 1200 | 00- | FD384 | FD103 |
| **MV AGUSTA** | | | | | |
| BRUTALE AMERICA | | 750 | 06- | FD384 | FD486 |
| BRUTALE CRC | | 750 | 06- | FD384 | FD486 |
| BRUTALE MAMBA | | 750 | 06- | FD384 | FD486 |
| BRUTALE S/ORO | | 750 | 02- | FD384 | FD486 |
| F-4 | | 750 | 99- | FD384 | FD486 |
| BRUTALE 910 | | 910 | 06- | FD384 | FD486 |
| F-4 MAMBA | | 1000 | 06- | FD384 | FD486 |
| VELTRO 1 | | 1000 | 06- | FD384 | FD486 |

## FD 391

mm: 43,2 x 48,7 | 10,0 | A | A

G1054 | G1003 | G1300 |

| BRAND MARCA | MODEL MODELO | C.C. | YEAR | FRONT | REAR |
|---|---|---|---|---|---|
| **BREMBO RACING** | | | | | |
| X99C4** 4P | | | - | FD391 | FD |
| XA888** (MOTO3) | | | - | FD391 | FD |

## FD 392

mm: 49,7 x 36,0 | 8,0 | A | A

G1371 |

| BRAND MARCA | MODEL MODELO | C.C. | YEAR | FRONT | REAR |
|---|---|---|---|---|---|
| **BIMOTA** | | | | | |
| BB3 | | 1000 | 14- | FD373 | FD392 |
| **BREMBO RACING** | | | | | |
| X206101 | | | - | | FD392 |
| X206121 | | | - | | FD392 |
| X988870 | | | - | | FD392 |
| XA1J040 | | | - | | FD392 |

## FD 393

mm: 95,6 x 36,9 | 8,4 | A | B

mm: 109,6 x 51,2 | 8,4 | A | B

G1054 | G1370 |

| BRAND MARCA | MODEL MODELO | C.C. | YEAR | FRONT | REAR |
|---|---|---|---|---|---|
| **YAMAHA** | | | | | |
| CRYPTON-X T 135 | | 135 | 08-14 | FD393 | MF |
| **YAMAHA INDONESIA** | | | | | |
| JUPITER MX T 135 | | 135 | 06- | FD393 | FD259 |
| JUPITER MX T 135 HC | | 135 | 06-10 | FD393 | MF |
| JUPITER MX T 135 SE | | 135 | 06- | FD393 | MF |
| JUPITER MX T 135 SEC | | 135 | 08- | FD393 | MF |
| V - IXION FZ 150 | | 150 | 07- | FD393 | MF |
| **YAMAHA MALASIA** | | | | | |
| 135 LC | | 135 | 11- | FD393 | MF |

| | | | | |
|---|---|---|---|---|
| NUOVO LC | 135 | 12- | FD393 | MF |
| FZ 150i | 150 | 11- | FD393 | MF |

## FD 398

mm: 46,4 x 49,2 — A | 6,9 — A

| BRAND MARCA | MODEL MODELO | C.C. | YEAR | FRONT | REAR |
|---|---|---|---|---|---|
| **BUELL** | | | | | |
| 1125 CR | | 1125 | 09- | | FD398 |
| 1125 R | | 1125 | 08- | | FD398 |

## FD 399

mm: 94,0 x 36,1 — A | 10,1 — A

G1054 | G1380

| BRAND MARCA | MODEL MODELO | C.C. | YEAR | FRONT | REAR |
|---|---|---|---|---|---|
| **KYMCO** | | | | | |
| PEOPLE GT 300i | | 300 | 10- | FD245 | FD399 |
| **PEUGEOT** | | | | | |
| LXR 200 | | 200 | 10- | FD188 | FD399 |
| **SYM** | | | | | |
| H 200 SE | | 200 | 06- | FD188 | FD399 |
| HD 200 S EVO | | 200 | 06- | FD188 | FD399 |
| GTS 250 | | 250 | 07- | FD222 | FD399 |
| JOYMAX 250 i | | 250 | 07- | FD275 | FD399 |
| JOYMAX 250 i | | 250 | 07- | FD275 | FD399 |
| WOLF SB 250 Ni | | 250 | 15- | FD399 | FD336 |
| JOYMAX 300 i EVO | | 300 | 09- | FD275 | FD399 |
| WOLF SB 300 | | 300 | 15- | FD399 | FD336 |
| WOLF SB 300 CR | | 300 | 15- | FD399 | FD336 |
| **TGB** | | | | | |
| X - MOTION 250i | | 250 | 08- | | FD399 |

## FD 400

mm: 81,0 x 42,0 — A | 8,3 — B

mm: 81,0 x 42,0 — A | 8,3 — B

G1380

| BRAND MARCA | MODEL MODELO | C.C. | YEAR | FRONT | REAR |
|---|---|---|---|---|---|
| **KAWASAKI** | | | | | |
| EPSILON 250 | | 250 | 03- | FD222 | FD400 |
| **SUZUKI** | | | | | |
| AN 250 BURGMAN | | 250 | 98-02 | FD222 | FD400 |
| AN 250 BURGMAN | | 250 | 03-06 | FD222 | FD400 |
| AN 250 BURGMAN / SKY WAVE IZQ. | | 250 | 07-08 | FD187 | FD400 |
| AN 400 BURGMAN | | 400 | 98-02 | FD222 | FD400 |
| AN 400 BURGMAN | | 400 | 03-05 | FD222 | FD400 |
| CK SKY WAVE 400 | | 400 | 03- | FD222 | FD400 |

## FD 401

mm: 88,0 x 46,0 — A | 8,4 — B

mm: 88,0 x 46,0 — A | 8,4 — B

G1054 | G1380

| BRAND MARCA | MODEL MODELO | C.C. | YEAR | FRONT | REAR |
|---|---|---|---|---|---|
| **SUZUKI** | | | | | |
| CJ 250 SKY WAVE / Type S | | 250 | 03- | FD222 | FD401 |
| GEMMA 250 (JAP) | | 250 | 09- | FD140 | FD401 |
| AN 400 BURGMAN DER./RIGHT | | 400 | 06- | FD145 | FD401 |
| AN 400 SKY WAVE DER./RIGHT | | 400 | 07- | FD145 | FD401 |
| AN 650 BURGMAN | | 650 | 02-03 | FD266 | FD401 |
| AN 650 BURGMAN | | 650 | 04-12 | FD266 | FD401 |
| AN 650 BURGMAN | | 650 | 13- | FD266 | FD401 |
| CP SKY WAVE 650 | | 650 | 03-03 | FD266 | FD401 |
| CP SKY WAVE 650 | | 650 | 04- | FD266 | FD401 |

## FD 402

mm: 92,0 x 49,5 — A | 8,0 — A

G1370 | G1375

| BRAND MARCA | MODEL MODELO | C.C. | YEAR | FRONT | REAR |
|---|---|---|---|---|---|
| **BUELL** | | | | | |
| XB 9 R FIREBOLT F | | 984 | 02- | FD402 | FD103 |
| XB 9 S LIGHTNING F | | 984 | 03- | FD402 | FD103 |
| XB 9 SX CITYX | | 984 | 06- | FD402 | FD103 |
| XB 12 R FIREBOLT | | 1200 | 06- | FD402 | FD103 |
| XB 12 S LIGHTNING | | 1200 | 06- | FD402 | FD103 |
| XB 12 SS LIGHTNING LONG | | 1200 | 06- | FD402 | FD103 |
| XB 12 X ULYSSES | | 1200 | 06-08 | FD402 | FD103 |
| XB 12 XT ULYSSES | | 1200 | 09- | FD402 | FD103 |

## FD 405

mm: 90,6 x 62,0 — A | 13,5 — A[1]

G1370

| BRAND MARCA | MODEL MODELO | C.C. | YEAR | FRONT | REAR |
|---|---|---|---|---|---|
| **HARLEY DAVIDSON** | | | | | |
| FXD SUPER GLIDE (cast wheel) | | 1450 | 08- | FD405 | FD406 |
| FXD SWITCHBACK | | 1450 | 12- | FD405 | FD406 |
| FXDCi SUPER GLIDE CUSTOM DYNA | | 1450 | 08- | FD405 | FD406 |
| FXDF FAT BOB (cast wheel) | | 1450 | 08- | FD405 | FD406 |
| FXDLi LOW RIDER (cast wheel) | | 1450 | 08- | FD405 | FD406 |
| FXDWG DYNA WIDE GLIDE | | 1450 | 08- | FD405 | FD406 |
| FXDWG WIDE GLIDE | | 1450 | 08- | FD405 | FD406 |
| FXDWGi WIDE GLIDE DYNA | | 1450 | 10- | FD405 | FD406 |
| FLS SOFTAIL SLIM | | 1450 | 12- | FD405 | FD406 |
| FLSTC HERITAGE CLASSIC SOFTAIL | | 1450 | 08- | FD405 | FD406 |
| FLSTF FAT BOY | | 1450 | 08- | FD405 | FD406 |
| FLSTFB FAT BOY SPECIAL | | 1450 | 10- | FD405 | FD406 |
| FLSTN/i SOFTAIL DE LUXE | | 1450 | 08- | FD405 | FD406 |
| FXCW ROCKER | | 1450 | 08- | FD405 | FD406 |
| FXCWC ROCKER C | | 1450 | 08- | FD405 | FD406 |
| FXS BLACKLINE | | 1450 | 11- | FD405 | FD406 |
| FXSTB/i NIGHT TRAIN SOFTAIL | | 1450 | 08- | FD405 | FD406 |
| FXSTC SOFTAIL CUSTOM | | 1450 | 08- | FD405 | FD406 |

## FD 406

mm: 127,5 x 52,6 — A | 7,4 — A[1]

G1371

| BRAND MARCA | MODEL MODELO | C.C. | YEAR | FRONT | REAR |
|---|---|---|---|---|---|
| **HARLEY DAVIDSON** | | | | | |
| FXD SUPER GLIDE (cast wheel) | | 1450 | 08- | FD405 | FD406 |
| FXD SWITCHBACK | | 1450 | 12- | FD405 | FD406 |
| FXDBi STREET BOB | | 1450 | 08- | FD235 | FD406 |
| FXDCi SUPER GLIDE CUSTOM DYNA | | 1450 | 08- | FD405 | FD406 |
| FXDF FAT BOB (cast wheel) | | 1450 | 08- | FD405 | FD406 |
| FXDLi LOW RIDER (cast wheel) | | 1450 | 08- | FD405 | FD406 |
| FXDWG DYNA WIDE GLIDE | | 1450 | 08- | FD405 | FD406 |
| FXDWG WIDE GLIDE | | 1450 | 08- | FD405 | FD406 |
| FXDWGi WIDE GLIDE DYNA | | 1450 | 10- | FD405 | FD406 |
| FLS SOFTAIL SLIM | | 1450 | 12- | FD405 | FD406 |
| FLSTC HERITAGE CLASSIC SOFTAIL | | 1450 | 08- | FD405 | FD406 |
| FLSTF FAT BOY | | 1450 | 08- | FD405 | FD406 |
| FLSTFB FAT BOY SPECIAL | | 1450 | 10- | FD405 | FD406 |
| FLSTN/i SOFTAIL DE LUXE | | 1450 | 08- | FD405 | FD406 |
| FXCW ROCKER | | 1450 | 08- | FD405 | FD406 |
| FXCWC ROCKER C | | 1450 | 08- | FD405 | FD406 |
| FXS BLACKLINE | | 1450 | 11- | FD405 | FD406 |
| FXSTB/i NIGHT TRAIN SOFTAIL | | 1450 | 08- | FD405 | FD406 |
| FXSTC SOFTAIL CUSTOM | | 1450 | 08- | FD405 | FD406 |

## FD 409

mm: 98,5 x 33,1 — A | 7,6 — B

mm: 111,2 x 36,1 — A | 7,6 — B

G1054 | G1396

| BRAND MARCA | MODEL MODELO | C.C. | YEAR | FRONT | REAR |
|---|---|---|---|---|---|
| **GAS GAS** | | | | | |
| HALLEY 450 | | 450 | 09- | FD409 | FD252 |
| **HONDA** | | | | | |
| CRF 250 LD | | 250 | 13- | FD409 | |
| **SCORPA** | | | | | |
| T-RIDE 250 F | | 250 | 08- | FD409 | FD410 |

## FD 410

mm: 50,0 x 47,2 — A | 5,25 — A

G1054 | G1805

| BRAND MARCA | MODEL MODELO | C.C. | YEAR | FRONT | REAR |
|---|---|---|---|---|---|
| **SCORPA** | | | | | |
| T-RIDE 250 F | | 250 | 08- | FD409 | FD410 |

## FD 412

mm: 70,0 x 42,0 — A | 8,0 — A

G1380

| BRAND MARCA | MODEL MODELO | C.C. | YEAR | FRONT | REAR |
|---|---|---|---|---|---|
| **SYM** | | | | | |
| EURO MX | | 150 | 02- | FD412 | MF |
| JOYRIDE | | 150 | 01- | FD412 | FD261 |
| RS 150 | | 150 | 06- | FD412 | FD145 |
| VS 150 | | 150 | 06- | FD412 | MF |



For other models years previous to 1990 visit **www.galferonline.es** · Para otros modelos anteriores al año 1990 visitar **www.galferonline.es**
For consult TÜV (ABE) type approvals visit **www.galfermoto.com --> DOWNALOAD --> TÜV CERTIFICATIONS** · Para consultar las homologaciones TÜV (ABE) visitar **www.galfermoto.com --> DESCARGAS --> CERTIFICACIONES TÜV**

| | | | | |
|---|---|---|---|---|
| JOYRIDE | 200 | 01- | FD412 | FD261 |
| JOYRIDE 200i EVO | 200 | 13- | FD412 | FD261 |

## FD 414

mm 78,1 x 46,2 | 7,8 | A | A

G1375

| BRAND MARCA | MODEL MODELO | C.C. | YEAR | FRONT | REAR |
|---|---|---|---|---|---|
| **TRIUMPH** | | | | | |
| DAYTONA 675 | | 675 | 09- | FD414 | FD103 |
| DAYTONA 675 SE | | 675 | 09- | FD414 | FD103 |

## FD 437

mm 35,0 x 40,5 | 9,0 | A | A

G1375 | G1300

| BRAND MARCA | MODEL MODELO | C.C. | YEAR | FRONT | REAR |
|---|---|---|---|---|---|
| **BMW** | | | | | |
| S 1000 R NAKED | | 1000 | 14- | FD437 | FD165 |
| S 1000 RR | | 1000 | 09-14 | FD437 | FD165 |
| S 1000 RR ABS | | 1000 | 09-14 | FD437 | FD165 |

## FD 438

mm 90,0 x 33,3 | 9,8 | A | A

G1054 | G1380

| BRAND MARCA | MODEL MODELO | C.C. | YEAR | FRONT | REAR |
|---|---|---|---|---|---|
| **KAWASAKI** | | | | | |
| J 300 | | 300 | 14- | FD266 | FD438 |
| J 300 SE | | 300 | 14- | FD266 | FD438 |
| **KYMCO** | | | | | |
| DOWNTOWN | | 200 | 10- | FD266 | FD438 |
| AGILITY MAXI | | 300 | 15- | FD245 | FD438 |
| DOWNTOWN | | 300 | 09-14 | FD266 | FD438 |
| SUPER DINK 300 | | 300 | 10- | FD266 | FD438 |
| SUPER DINK 300 i ABS | | 300 | 11- | FD266 | FD438 |
| YAGER GT 300 i | | 300 | 13- | FD266 | FD438 |
| DOWNTOWN | | 350 | 15- | FD245 | FD438 |

## FD 439

mm 108,6 x 41,0 | 8,0 | A | B

mm 111,2 x 45,0 | 8,0 | A | B

G1054 | G1383

| BRAND MARCA | MODEL MODELO | C.C. | YEAR | FRONT | REAR |
|---|---|---|---|---|---|
| **HONDA** | | | | | |
| PCX 150 | | 150 | 13- | FD439 | MF051 |
| **HONDA INDONESIA** | | | | | |
| PCX 150 | | 150 | 13- | FD439 | MF051 |
| **HONDA MALASIA** | | | | | |
| PCX 150 | | 150 | 13- | FD439 | MF051 |

## FD 442

mm 69,0 x 51,4 | 9,0 | A (2x)

mm 33,0 x 51,7 | 9,0 | A | A[1]

G1375

| BRAND MARCA | MODEL MODELO | C.C. | YEAR | FRONT | REAR |
|---|---|---|---|---|---|
| **HONDA** | | | | | |
| VFR 1200 FA | | 1200 | 10-13 | FD442 | FD443 |
| VFR 1200 FDA DCT | | 1200 | 10-13 | FD442 | FD443 |

## FD 443

mm 99,4 x 38,0 | 9,0 | A | A[1]

G1371

| BRAND MARCA | MODEL MODELO | C.C. | YEAR | FRONT | REAR |
|---|---|---|---|---|---|
| **HONDA** | | | | | |
| CROSSRUNNER X | | 800 | 11-14 | FD344 | FD443 |
| CROSSRUNNER X | | 800 | 15- | FD326 | FD443 |
| VFR 800 ABS | | 800 | 14- | FD326 | FD443 |
| CB 1000 R | | 1000 | 08- | FD326 | FD443 |
| CB 1000 R ABS | | 1000 | 08- | FD344 | FD443 |
| VFR 1200 FA | | 1200 | 10-13 | FD442 | FD443 |
| VFR 1200 FA | | 1200 | 14- | | FD443 |
| VFR 1200 FDA DCT | | 1200 | 10-13 | FD442 | FD443 |
| VFR 1200 FDA DCT | | 1200 | 14- | | FD443 |

## FD 444

mm 85 x 43 | 9,5 | A | A

G1383

| BRAND MARCA | MODEL MODELO | C.C. | YEAR | FRONT | REAR |
|---|---|---|---|---|---|
| **HONDA** | | | | | |
| CBF 150 | | 150 | 04- | FD444 | MF |
| CBF 250 TWISTER | | 250 | 04- | FD444 | MF051 |
| **HONDA BRAZIL** | | | | | |
| CBF 150 | | 150 | 04- | FD444 | MF |
| CBF 250 TWISTER | | 250 | 04- | FD444 | MF |

## FD 450

mm 69,5 x 45,2 | 8,8 | A | A

G1054

| BRAND MARCA | MODEL MODELO | C.C. | YEAR | FRONT | REAR |
|---|---|---|---|---|---|
| **KTM** | | | | | |
| 200 DUKE | | 200 | 12- | FD450 | FD165 |
| 200 DUKE ABS | | 200 | 14- | FD450 | FD165 |
| RC 200 | | 200 | 14- | FD450 | FD165 |
| 390 DUKE | | 390 | 13- | FD450 | FD165 |
| 390 DUKE ABS | | 390 | 14- | FD450 | FD165 |
| RC 390 | | 390 | 14- | FD450 | FD165 |

## FD 456

mm 66,9 x 36,0 | 9,0 | A | A[1]

G1054

| BRAND MARCA | MODEL MODELO | C.C. | YEAR | FRONT | REAR |
|---|---|---|---|---|---|
| **BETA** | | | | | |
| URBAN 200 | | 200 | 08- | FD162 | FD456 |
| ALP 4.0 | | 350 | 08- | FD162 | FD456 |

## FD 457

mm 86,2 x 40,2 | 9,0 | A | A[1]

G1054

| BRAND MARCA | MODEL MODELO | C.C. | YEAR | FRONT | REAR |
|---|---|---|---|---|---|
| **HONDA** | | | | | |
| CBR 250 R | | 250 | 11- | FD266 | FD457 |
| CBR 250 R C-ABS | | 250 | 11- | FD344 | FD457 |
| CBR 300 R ABS | | 300 | 14- | FD266 | FD457 |
| **HONDA INDONESIA** | | | | | |
| CBR 250 R | | 250 | 11- | FD266 | FD457 |
| CBR 250 R C-ABS | | 250 | 11- | FD344 | FD457 |
| **HONDA MALASIA** | | | | | |
| CBR 250 R | | 250 | 11- | FD266 | FD457 |
| **SUZUKI** | | | | | |
| GW 250 INAZUMA | | 250 | 12-14 | FD266 | FD457 |
| GW 250 INAZUMA F | | 250 | 15- | FD266 | FD457 |
| GW 250 INAZUMA S | | 250 | 13-14 | FD266 | FD457 |
| GW 250 INAZUMA Z | | 250 | 15- | FD266 | FD457 |
| SFV 650 GLADIUS RIGHT/DER | | 650 | 09- | FD179 | FD457 |
| SFV 650 GLADIUS ABS RIGHT/DER | | 650 | 10- | FD179 | FD457 |

## FD 473

mm 109 x 50,5 | 9,0 | A | B

mm 113,5 x 41 | 9,0 | A | B

G1380

| BRAND MARCA | MODEL MODELO | C.C. | YEAR | FRONT | REAR |
|---|---|---|---|---|---|
| **YAMAHA** | | | | | |
| X - ENTER | | 150 | 12- | FD473 | MF |

## FD 474

mm 94 x 36 | 10,5 | A | A

G1380

| BRAND MARCA | MODEL MODELO | C.C. | YEAR | FRONT | REAR |
|---|---|---|---|---|---|
| **KYMCO** | | | | | |
| PEOPLE | | 250 | 05- | FD145 | FD474 |
| PEOPLE S IZQ./LEFT | | 250 | 06- | FD187 | FD474 |
| XCITING 250 | | 250 | 05-05 | FD266 | FD474 |
| XCITING 250 | | 250 | 06- | FD266 | FD474 |
| K - XCT 300i | | 300 | 12- | FD245 | FD474 |
| XCITING 300i | | 300 | 08- | FD266 | FD474 |
| XCITING 300i R | | 300 | 08- | FD266 | FD474 |
| **YAMAHA** | | | | | |
| X - MAX 400 | | 400 | 13- | FD266 | FD474 |

## FD 475

mm: 84,9 x 51,3 | 8,0 | A | A[1]

G1054 | G1370 | G1375 | G1003 |

| BRAND MARCA | MODEL MODELO | C.C. | YEAR | FRONT | REAR |
|---|---|---|---|---|---|
| **APRILIA** | | | | | |
| RSV TUONO V4 R | | 1100 | 15- | FD475 | FD220 |
| CAPONORD 1200 | | 1200 | 13- | FD475 | FD165 |
| **BENELLI** | | | | | |
| BN 600 GT | | 600 | 15- | FD475 | FD220 |
| BN 600 R | | 600 | 14- | FD475 | FD220 |
| **BMW** | | | | | |
| F 800 R | | 800 | 15- | FD475 | FD165 |
| S 1000 RR | | 1000 | 15- | FD475 | FD165 |
| S 1000 RR ABS | | 1000 | 15- | FD475 | FD165 |
| S 1000 RX | | 1000 | 15- | FD475 | FD172 |
| R 1200 GS LC | | 1200 | 13- | FD475 | FD172 |
| R 1200 GS LC ADVENTURE | | 1200 | 13- | FD475 | FD172 |
| R 1200 R | | 1200 | 15- | FD475 | FD186 |
| R 1200 R NINE T | | 1200 | 14- | FD475 | FD186 |
| R 1200 RT LC | | 1200 | 14- | FD475 | FD172 |
| R 1200 RS | | 1200 | 15- | FD475 | FD172 |
| K 1300 S MOTOR SPORT | | 1300 | 15- | FD475 | FD186 |
| **DUCATI** | | | | | |
| SCRAMBLER (TODAS) (ALL) | | 800 | 15- | FD475 | FD220 |
| HYPERMOTARD | | 821 | 13- | FD475 | FD220 |
| HYPERMOTARD SP | | 821 | 13- | FD475 | FD220 |
| HYPERSTRADA | | 821 | 13- | FD475 | FD220 |
| MONSTER 821 | | 821 | 14- | FD475 | FD220 |
| 899 PANIGALE | | 899 | 13- | FD475 | FD220 |
| MONSTER 1200 | | 1200 | 14- | FD475 | FD220 |
| MULTISTRADA 1200 | | 1200 | 15- | FD475 | FD172 |
| **HONDA** | | | | | |
| CBR 1000 RR FIREBLADE SP | | 1000 | 15- | FD475 | FD363 |
| **KTM** | | | | | |
| 1290 SUPER ADVENTURE | | 1290 | 15- | FD475 | FD172 |
| **MV AGUSTA** | | | | | |
| RIVALE 800 | | 800 | 13- | FD475 | FD220 |
| STRADALE 800 | | 800 | 15- | FD475 | FD220 |
| TURISMO VELOCE | | 800 | 14- | FD475 | FD220 |
| TURISMO VELOCE LUSSO | | 800 | 14- | FD475 | FD220 |

## FD 481

mm: 72,5 x 53,3 | 8,0 | A | A

G1054 |

| BRAND MARCA | MODEL MODELO | C.C. | YEAR | FRONT | REAR |
|---|---|---|---|---|---|
| **SYM** | | | | | |
| MAX SYM 400i DER | | 400 | 11- | FD481 | FD483 |
| MAX SYM 400i ABS | | 400 | 14- | FD481 | FD483 |
| MAX SYM 600i ABS | | 600 | 15- | FD481 | FD483 |

## FD 482

mm: 72,5 x 53,3 | 8,0 | A | A[1]

G1054 |

| BRAND MARCA | MODEL MODELO | C.C. | YEAR | FRONT | REAR |
|---|---|---|---|---|---|
| **SYM** | | | | | |
| MAX SYM 400i IZQ | | 400 | 11- | FD482 | |
| MAX SYM 600i SPORT ABS | | 600 | 15- | FD482 | FD483 |

## FD 483

mm: 83,0 x 48,5 | 12,0 | A | B

mm: 83,0 x 48,5 | 12,0 | A | B

G1054 |

| BRAND MARCA | MODEL MODELO | C.C. | YEAR | FRONT | REAR |
|---|---|---|---|---|---|
| **SYM** | | | | | |
| MAX SYM 400i DER | | 400 | 11- | FD481 | FD483 |
| MAX SYM 400i ABS | | 400 | 14- | FD481 | FD483 |
| MAX SYM 600i ABS | | 600 | 15- | FD481 | FD483 |
| MAX SYM 600i SPORT ABS | | 600 | 15- | FD482 | FD483 |

## FD 484

mm: 97,0 x 39,7 | 11,5 | A | B

mm: 113,0 x 52,8 | 11,5 | A | B

G1054 |

| BRAND MARCA | MODEL MODELO | C.C. | YEAR | FRONT | REAR |
|---|---|---|---|---|---|
| **YAMAHA** | | | | | |
| YZF - R25 | | 250 | 15- | FD485 | FD484 |
| YZF - R3 | | 320 | 15- | FD485 | FD484 |

## FD 485

mm: 99,0 x 44,8 | 8,5 | A | B

mm: 113,3 x 54,9 | 8,5 | A | B

G1054 |

| BRAND MARCA | MODEL MODELO | C.C. | YEAR | FRONT | REAR |
|---|---|---|---|---|---|
| **YAMAHA** | | | | | |
| YZF - R25 | | 250 | 15- | FD485 | FD484 |
| YZF - R3 | | 320 | 15- | FD485 | FD484 |

## FD 486

mm: 69,7 x 42,6 | 7,3 | A | A

G1054 |

| BRAND MARCA | MODEL MODELO | C.C. | YEAR | FRONT | REAR |
|---|---|---|---|---|---|
| **MV AUGUSTA** | | | | | |
| BRUTALE | | 750 | 06- | FD384 | FD486 |
| F-4 | | 750 | 99- | FD384 | FD486 |
| BRUTALE 910 | | 910 | 06- | FD384 | FD486 |
| BRUTALE 920 | | 920 | 11- | FD176 | FD486 |
| BRUTALE 989 | | 1000 | 08-09 | FD176 | FD486 |
| BRUTALE 990 R | | 1000 | 10- | FD176 | FD486 |
| F-4 1000 | | 1000 | 07- | FD373 | FD486 |
| F-4 MAMBA | | 1000 | 06- | FD384 | FD486 |
| VELTRO 1 | | 1000 | 06- | FD384 | FD486 |
| BRUTALE 1078 | | 1078 | 08-09 | FD373 | FD486 |
| F-4 312 RR | | 1078 | 08- | FD373 | FD486 |
| F-4 1078 RR | | 1078 | 08- | FD373 | FD486 |



For other models years previous to 1990 visit **www.galferonline.es** · Para otros modelos anteriores al año 1990 visitar **www.galferonline.es**
For consult TÜV (ABE) type approvals visit **www.galfermoto.com --> DOWNLOAD --> TÜV CERTIFICATIONS** · Para consultar las homologaciones TÜV (ABE) visitar **www.galfermoto.com --> DESCARGAS --> CERTIFICACIONES TÜV**

## DF 004 W

øext. 256 mm øint. 144 — 4,0 — OE

| BRAND MARCA | MODEL MODELO | C.C. | YEAR | FRONT | REAR |
|---|---|---|---|---|---|
| **HONDA** | | | | | |
| XRE 300 | | 300 | 09- | DF004 | DF048 |
| XRE 300 C-ABS | | 300 | 10- | DF004 | DF048 |
| NX 4 DOMINATOR | | 400 | 99-02 | DF004 | DF010 |
| XL 600 V TRANSALP IZQ. | | 600 | 97-99 | DF004 | |
| NX 650 DOMINATOR | | 650 | 93-96 | DF004 | DF010 |
| NX 650 DOMINATOR | | 650 | 97- | DF004 | DF010 |
| XL 650 V TRANSALP IZQ. | | 650 | 00- | DF004 | |
| XL 700 V TRANSALP IZQ. | | 700 | 08- | DF004 | |
| XL 700 V TRANSALP IZQ. ABS | | 700 | 08- | DF004 | |
| **HONDA BRAZIL** | | | | | |
| XRE 300 | | 300 | 09- | DF004 | DF048 |
| XRE 300 C-ABS | | 300 | 10- | DF004 | DF048 |

## DF 005 W

øext. 276 mm øint. 144 — 5,0 — OE

| BRAND MARCA | MODEL MODELO | C.C. | YEAR | FRONT | REAR |
|---|---|---|---|---|---|
| **HONDA** | | | | | |
| FJS 400 SILVER WING | | 400 | 06- | DF005 | DF007 |
| SILVER WING T 400 | | 400 | 09- | DF005 | DF007 |
| CBR 600 F2 | | 600 | 91-94 | DF005 | DF013 |
| FJS 600 SILVER WING ABS | | 600 | 03- | DF005 | DF007 |
| SW-T 600 | | 600 | 11- | DF005 | DF007 |
| VIGOR 650 | | 650 | 99- | DF005 | DF010 |
| **TRIUMPH** | | | | | |
| TIGER 900 (left) | | 900 | 93-98 | DF005 | |
| TIGER 900 (right) | | 900 | 93-98 | DF005 | |

## DF 006 W

øext. 296 mm øint. 144 — 4,0 — OE

| BRAND MARCA | MODEL MODELO | C.C. | YEAR | FRONT | REAR |
|---|---|---|---|---|---|
| **CAGIVA** | | | | | |
| CANYON | | 500 | 99- | DF006 | |
| CANYON | | 600 | 95- | DF006 | |

## DF 007 W / DF 007 WS

DF 007 W: øext. 240 mm øint. 105 — 4,0 — OE

DF 007 WS: øext. 280 mm øint. 105 — 4,0 — SP035

| BRAND MARCA | MODEL MODELO | C.C. | YEAR | FRONT | REAR |
|---|---|---|---|---|---|
| **CAGIVA** | | | | | |
| ELEFANT 900 i.e. | | 900 | 91-92 | DF009 | DF007 |
| GRAN CANYON | | 900 | 99- | DF009 | DF007 |
| **HONDA** | | | | | |
| PANTHEON 150 | | 150 | 98-02 | DF007 | - |
| PANTHEON 150 | | 150 | 03- | DF007 | DF013 |
| SH 150 i SCOOPY (D-D) | | 150 | 09- | DF007 | DF007 |
| SH 150 i SCOOPY ABS | | 150 | 13- | DF007 | DF007 |
| SH 150 i SCOOPY CBS | | 150 | 13- | DF007 | DF007 |
| CB 250 TWO FIFTY | | 250 | 92- | DF007 | - |
| FAZE 250 | | 250 | 10- | DF007 | DF007 |
| FES 250 FORESIGHT | | 250 | 97-01 | DF007 | - |
| FES 250 FORESIGHT DD | | 250 | 00- | DF007 | DF013 |
| FES 250 FORZA, REFLEX | | 250 | 00-04 | DF007 | DF013 |
| FES 250 FORZA EX | | 250 | 05- | DF007 | DF007 |
| FES 250 FORZA X / Z | | 250 | 05- | DF007 | DF007 |
| FES 250 JAZZ /ABS | | 250 | 00-04 | DF007 | DF013 |
| PS 250 | | 250 | 04- | DF007 | - |
| NSS 300 FORZA | | 300 | 13- | DF007 | DF007 |
| CB 300 R ABS | | 300 | 10- | | DF007 |
| CB 400 FOUR | | 400 | 97-00 | DF059 | DF007 |
| CB 400 SB | | 400 | 05- | DF059 | DF007 |
| CB 400 SUPER BOL D'OR | | 400 | 05- | DF059 | DF007 |
| CB 400 SUPER FOUR | | 400 | 05- | DF059 | DF007 |
| CB 400 SF | | 400 | 02-04 | DF059 | DF007 |
| FJS 400 SILVER WING | | 400 | 06- | DF005 | DF007 |
| SILVER WING 400 | | 400 | 02-08 | DF083 | DF007 |
| SILVER WING T 400 | | 400 | 09- | DF005 | DF007 |
| CBR 600 F | | 600 | 11- | DF062 | DF007 |
| CBR 600 F ABS | | 600 | 11- | DF062 | DF007 |
| FJS 600 SILVER WING | | 600 | 01- | DF083 | DF007 |
| FJS 600 SILVER WING ABS | | 600 | 03- | DF005 | DF007 |
| SW-T 600 | | 600 | 11- | DF005 | DF007 |
| XL 600 V TRANSALP | | 600 | 91-93 | DF031 | DF007 |
| XL 600 V TRANSALP | | 600 | 94-96 | DF031 | DF007 |
| XL 600 V TRANSALP DER. | | 600 | 97-99 | DF073 | DF007 |
| XL 650 V TRANSALP DER. | | 650 | 00- | DF073 | DF007 |
| XL 700 V TRANSALP DER. | | 700 | 08- | DF073 | DF007 |
| XL 700 V TRANSALP DER. ABS | | 700 | 08- | DF073 | DF007 |
| CB 750 SEVEN FIFTY | | 750 | 92- | DF009 | DF007 |
| 919 (USA) | | 900 | 01- | DF063 | DF007 |
| CB 900 SF HORNET | | 900 | 01- | DF063 | DF007 |
| **HONDA BRAZIL** | | | | | |
| CB 300 R ABS | | 300 | 10- | | DF007 |
| **KEEWAY** | | | | | |
| OUTLOOK 150 | | 150 | 07- | DF007 | |
| **PEUGEOT** | | | | | |
| SV 250 | | 250 | 01-02 | DF007 | - |
| SV 250 | | 250 | 03- | DF007 | DF013 |

## DF 009 W

øext. 296 mm øint. 144 — 5,0 — OE

| BRAND MARCA | MODEL MODELO | C.C. | YEAR | FRONT | REAR |
|---|---|---|---|---|---|
| **CAGIVA** | | | | | |
| ELEFANT 750 | | 750 | 94- | DF009 | |
| CANYON | | 900 | 97- | DF009 | DF458 |
| ELEFANT 900 i.e. | | 900 | 91-92 | DF009 | DF007 |
| GRAN CANYON | | 900 | 99- | DF009 | DF007 |
| NAVIGATOR | | 1000 | 00- | DF009 | |
| **HONDA** | | | | | |
| CB 500 | | 500 | 95-96 | DF009 | - |
| CB 500 | | 500 | 97-97 | DF009 | |
| CB 500 S | | 500 | 98- | DF009 | |
| CBF 500 ABS | | 500 | 04- | DF009 | DF072 |
| CBF 500 N | | 500 | 04- | DF009 | DF072 |
| CBF 600 /S | | 600 | 04-07 | DF009 | DF072 |
| NTV 650 DEAUVILLE | | 650 | 98-01 | DF009 | DF040 |
| NTV 650 V DEAUVILLE | | 650 | 02- | DF009 | DF040 |
| NTV 700 V DEAUVILLE | | 700 | 06- | DF009 | DF040 |
| CB 750 SEVEN FIFTY | | 750 | 92- | DF009 | DF007 |
| VFR 750 F | | 750 | 90-93 | DF009 | DF029 |
| VT 750 C SHADOW | | 750 | 97- | DF009 | - |
| VT 750 C2 SHADOW BLACK | | 750 | 10- | DF009 | - |
| VT 750 DC BLACK WIDOW | | 750 | 02- | DF009 | - |
| VT 750 DC SPIRIT | | 750 | 07- | DF009 | - |
| CBR 1000 F DUAL | | 1000 | 93-99 | DF009 | DF028 |
| ST 1100 PAN EUROPEAN | | 1100 | 96-01 | DF009 | DF054 |
| ST 1100 PAN EUROPEAN CBS/ABS/TCS | | 1100 | 96-01 | DF009 | DF054 |

## DF 010 W

øext. 220 mm øint. 105 — 4,0 — OE

| BRAND MARCA | MODEL MODELO | C.C. | YEAR | FRONT | REAR |
|---|---|---|---|---|---|
| **HONDA** | | | | | |
| XL 250 R | | 250 | 90- | DF017 | DF010 |
| NX 4 DOMINATOR | | 400 | 99-02 | DF004 | DF010 |
| FMX 650 | | 650 | 05- | | DF010 |
| NX 650 DOMINATOR | | 650 | 93-96 | DF004 | DF010 |
| NX 650 DOMINATOR | | 650 | 97- | DF004 | DF010 |
| SLR 650 | | 650 | 96- | DF031 | DF010 |
| VIGOR 650 | | 650 | 99- | DF005 | DF010 |

## DF 012 CW

øext. 296 mm øint. 58 — 4,0 / 17,0 — OE

| BRAND MARCA | MODEL MODELO | C.C. | YEAR | FRONT | REAR |
|---|---|---|---|---|---|
| **HONDA** | | | | | |
| NSF 250 R | | 250 | 12- | DF012 | DF019 |

## DF 013 W

øext. 220 mm øint. 105 — 5,0 — OE

| BRAND MARCA | MODEL MODELO | C.C. | YEAR | FRONT | REAR |
|---|---|---|---|---|---|
| **HONDA** | | | | | |
| PANTHEON 150 | | 150 | 03- | DF007 | DF013 |
| CB 250 HORNET | | 250 | 96- | DF027 | DF013 |
| FES 250 FORESIGHT DD | | 250 | 00- | DF007 | DF013 |
| FES 250 FORZA, REFLEX | | 250 | 00-04 | DF007 | DF013 |
| FES 250 JAZZ /ABS | | 250 | 00-04 | DF007 | DF013 |
| VTR 250 | | 250 | 98-08 | DF065 | DF013 |
| VTZ 250 XELVIS | | 250 | 97- | | DF013 |
| CBR 400 RR | | 400 | 98- | DF027 | DF013 |
| 599 (USA) | | 600 | 00-06 | DF061 | DF013 |
| CB 600 HORNET | | 600 | 98-99 | DF059 | DF013 |
| CB 600 HORNET /S | | 600 | 00-06 | DF061 | DF013 |
| CBR 600 F2 | | 600 | 91-94 | DF005 | DF013 |
| CBR 600 F3 | | 600 | 95-98 | DF027 | DF013 |
| CBR 600 F4 | | 600 | 99-00 | DF676 | DF013 |
| CBR 600 F4 i SPORT | | 600 | 01-10 | DF063 | DF013 |
| CBR 600 RR | | 600 | 03-04 | DF070 | DF013 |
| CBR 600 RR | | 600 | 05-06 | DF070 | DF013 |
| CBR 600 RR | | 600 | 07- | DF070 | DF013 |
| CBR 600 RR | | 600 | 09- | DF070 | DF013 |
| CBR 600 RR C-ABS | | 600 | 09-12 | DF070 | DF013 |
| CBR 600 RR C-ABS | | 600 | 13- | DF070 | DF013 |
| CBR 900 RR | | 900 | 92-92 | DF676 | DF013 |
| CBR 900 RR | | 900 | 93-97 | DF027 | DF013 |
| CBR 900 RR | | 900 | 98-99 | DF041 | DF013 |
| CBR 900 RR (929) | | 929 | 00-01 | DF066 | DF013 |
| CBR 900 RR (954) | | 954 | 02- | DF066 | DF013 |
| CBR 1000 RR FIREBLADE | | 1000 | 04-05 | DF070 | DF013 |
| CBR 1000 RR FIREBLADE | | 1000 | 06-07 | DF068 | DF013 |
| CBR 1000 RR FIREBLADE | | 1000 | 08- | DF076 | DF013 |
| CBR 1000 RR FIREBLADE C-ABS | | 1000 | 09- | DF076 | DF013 |
| CBR 1000 RR FIREBLADE SP | | 1000 | 14-14 | DF076 | DF013 |
| CBR 1000 RR FIREBLADE SP | | 1000 | 15- | DF076 | DF013 |
| VTR 1000 F FIRESTORM | | 1000 | 97-99 | DF027 | DF013 |
| VTR 1000 F SUPER HAWK 996 (USA) | | 1000 | 97-99 | DF027 | DF013 |
| VTR 1000 SP-1 | | 1000 | 00-01 | DF068 | DF013 |
| VTR 1000 SP-2 | | 1000 | 02- | DF068 | DF013 |
| RVT 1000 RC 51 (USA) | | 1000 | 02- | DF068 | DF013 |
| **HONDA MALASIA** | | | | | |
| CBR 1000 RR FIREBLADE C-ABS | | 1000 | 09- | DF076 | DF013 |
| **PEUGEOT** | | | | | |

| | | | | |
|---|---|---|---|---|
| SV 250 | 250 | 03- | DF007 | DF013 |
| **TRIUMPH** | | | | |
| DAYTONA 600 | 600 | 03- | | DF013 |
| SPEED FOUR | 600 | 03- | | DF013 |
| TT 600 | 600 | 00- | | DF013 |
| DAYTONA 650 | 650 | 03-05 | DF877 | DF013 |
| DAYTONA TRIPLE | 675 | 06-08 | DF876 | DF013 |
| DAYTONA 675 | 675 | 09- | DF876 | DF013 |
| DAYTONA 675 SE | 675 | 09- | DF876 | DF013 |
| DAYTONA 675 R | 675 | 11-12 | DF876 | DF013 |
| STREET TRIPLE | 675 | 07- | DF876 | DF013 |
| STREET TRIPLE R | 675 | 09-12 | DF876 | DF013 |
| DAYTONA 900 T-595 | 900 | 97- | DF653 | DF013 |
| DAYTONA 955i | 955 | 99-00 | DF653 | DF013 |
| DAYTONA 955i | 955 | 01-01 | DF653 | DF013 |
| DAYTONA 955i | 955 | 02- | DF655 | DF013 |
| SPEED TRIPLE 955 i | 955 | 99-01 | DF651 | DF013 |
| SPEED TRIPLE 955 i | 955 | 02- | DF655 | DF013 |
| SPEED TRIPLE 1050 | 1050 | 05-05 | DF661 | DF013 |
| SPEED TRIPLE 1050 | 1050 | 06-07 | DF661 | DF013 |
| SPEED TRIPLE 1050 | 1050 | 08-10 | | DF013 |
| SPEED TRIPLE R | 1050 | 12- | | DF013 |

**DF 017 W** — øext. 240 mm / øint. 118 — 3,0 — OE

| BRAND MARCA | MODEL MODELO | C.C. | YEAR | FRONT | REAR |
|---|---|---|---|---|---|
| **HONDA** | | | | | |
| XL 250 R | | 250 | 90- | DF017 | DF010 |
| XR 650 L | | 650 | 93- | DF017 | DF048 |

**DF 019 W** — øext. 187 mm / øint. 89 — 4,0 — OE

| BRAND MARCA | MODEL MODELO | C.C. | YEAR | FRONT | REAR |
|---|---|---|---|---|---|
| **HONDA** | | | | | |
| NSF 250 R | | 250 | 12- | DF012 | DF019 |
| RS 250 R | | 250 | 90-92 | DF027 | DF019 |

**DF 020 W** — øext. 187 mm / øint. 72 — 4,0 — OE

| BRAND MARCA | MODEL MODELO | C.C. | YEAR | FRONT | REAR |
|---|---|---|---|---|---|
| **HONDA** | | | | | |
| CN 250 | | 250 | 93- | DF020 | - |
| CN 250 HELIX | | 250 | 90- | DF020 | - |
| CN 250 SPAZIO | | 250 | 91- | DF020 | - |

**DF 021 W** — øext. 276 mm / øint. 144 — 4,0 — OE

| BRAND MARCA | MODEL MODELO | C.C. | YEAR | FRONT | REAR |
|---|---|---|---|---|---|
| **HONDA** | | | | | |
| XRV 750 AFRICA TWIN | | 750 | 90-93 | DF021 | DF049 |
| XRV 750 AFRICA TWIN | | 750 | 94- | DF021 | DF049 |

**DF 022 W** — øext. 318 mm / øint. 144 — 5,0 — OE

| BRAND MARCA | MODEL MODELO | C.C. | YEAR | FRONT | REAR |
|---|---|---|---|---|---|
| **HONDA** | | | | | |
| V-TWIN MAGNA | | 250 | 97- | DF022 | - |
| NTV 650 REVERE | | 650 | 91- | DF022 | |
| ST 1100 PAN-EUROPEAN | | 1100 | 91-95 | DF022 | DF054 |
| VT 1100 C2 ACE | | 1100 | 97- | DF022 | DF040 |
| VT 1100 C2 SHADOW ACE | | 1100 | 95-96 | DF022 | DF040 |
| **TRIUMPH** | | | | | |
| ADVENTURER | | 900 | 99- | DF022 | |
| LEGEND TT | | 900 | 99- | DF022 | |

**DF 027 CW** — øext. 296 mm / øint. 58 — 5,0 / 17,0 — OE

| BRAND MARCA | MODEL MODELO | C.C. | YEAR | FRONT | REAR |
|---|---|---|---|---|---|
| **HONDA** | | | | | |
| CB 250 HORNET | | 250 | 96- | DF027 | DF013 |
| RS 250 R | | 250 | 90-92 | DF027 | DF019 |
| RS 250 R | | 250 | 93-96 | DF027 | DF026 |
| TSR 250 | | 250 | 98- | DF027 | DF064 |
| CBR 400 RR | | 400 | 98- | DF027 | DF013 |
| CBR 600 F3 | | 600 | 95-98 | DF027 | DF013 |
| VFR 750 F | | 750 | 94-97 | DF027 | DF029 |
| CBR 900 RR | | 900 | 93-97 | DF027 | DF013 |
| VTR 1000 F FIRESTORM | | 1000 | 97-99 | DF027 | DF013 |
| VTR 1000 F SUPER HAWK 996 (USA) | | 1000 | 97-99 | DF027 | DF013 |

**DF 028 W** — øext. 256 mm / øint. 144 — 5,0 — OE

| BRAND MARCA | MODEL MODELO | C.C. | YEAR | FRONT | REAR |
|---|---|---|---|---|---|
| **HONDA** | | | | | |
| CBR 1000 F DUAL | | 1000 | 93-99 | DF009 | DF028 |
| VARADERO | | 1000 | 03- | DF676 | DF028 |
| VARADERO ABS | | 1000 | 04- | DF676 | DF028 |
| CB 1100 X 11 ELEVEN | | 1100 | 00- | DF067 | DF028 |
| CBR 1100 XX SUP.BLACKBIRD | | 1100 | 97-99 | | DF028 |
| CBR 1100 XX i SUP.BLACKBIRD | | 1100 | 00- | DF067 | DF028 |
| CB 1300 | | 1300 | 03-04 | DF070 | DF028 |
| CB 1300 F | | 1300 | 10- | DF070 | DF028 |
| CB 1300 S | | 1300 | 05-09 | DF070 | DF028 |
| CB 1300 SUPER BOL D'OR / ABS | | 1300 | 05- | DF070 | DF028 |
| CB 1300 SUPER FOUR / ABS | | 1300 | 05- | DF070 | DF028 |

**DF 029 W** — øext. 256 mm / øint. 94 — 5,0 — OE

| BRAND MARCA | MODEL MODELO | C.C. | YEAR | FRONT | REAR |
|---|---|---|---|---|---|
| **HONDA** | | | | | |
| VFR 750 F | | 750 | 90-93 | DF009 | DF029 |
| VFR 750 F | | 750 | 94-97 | DF027 | DF029 |
| VFR 800 | | 800 | 98-00 | DF676 | DF029 |
| VFR 800 Vtec (INTERCEPTOR USA) | | 800 | 01-05 | DF676 | DF029 |

**DF 031 W** — øext. 276 mm / øint. 144 — 4,0 — OE

| BRAND MARCA | MODEL MODELO | C.C. | YEAR | FRONT | REAR |
|---|---|---|---|---|---|
| **HONDA** | | | | | |
| XL 600 V TRANSALP | | 600 | 91-93 | DF031 | DF007 |
| XL 600 V TRANSALP | | 600 | 94-96 | DF031 | DF007 |
| SLR 650 | | 650 | 96- | DF031 | DF010 |

**DF 032 W** — øext. 316 mm / øint. 144 — 5,0 — OE

| BRAND MARCA | MODEL MODELO | C.C. | YEAR | FRONT | REAR |
|---|---|---|---|---|---|
| **HONDA** | | | | | |
| VF 750 C MAGNA | | 750 | 95- | DF032 | - |

**DF 037 W** — øext. 190 mm / øint. 58 — 3,6 — SP — OE

**DF 037 RW** — øext. 190 mm / øint. 58 — 3,6 — SP

**DF 037 FLS** — øext. 220 mm / øint. 58 — 4,0 — SP

| BRAND MARCA | MODEL MODELO | C.C. | YEAR | FRONT | REAR |
|---|---|---|---|---|---|
| **P.G.O.** | | | | | |
| T-REX 150 4-T | | 150 | 01- | DF037 | - |

**DF 040 W** — øext. 276 mm / øint. 144 — 5,0 — OE

| BRAND MARCA | MODEL MODELO | C.C. | YEAR | FRONT | REAR |
|---|---|---|---|---|---|
| **HONDA** | | | | | |
| NTV 650 DEAUVILLE | | 650 | 98-01 | DF009 | DF040 |
| NTV 650 V DEAUVILLE | | 650 | 02- | DF009 | DF040 |
| NTV 700 V DEAUVILLE | | 700 | 06- | DF009 | DF040 |
| CB 1000 BIG ONE | | 1000 | 93- | DF692 | DF040 |
| CB 1000 SF | | 1000 | 93- | DF692 | DF040 |
| VT 1100 C2 ACE | | 1100 | 97- | DF022 | DF040 |
| VT 1100 C2 SHADOW ACE | | 1100 | 95-96 | DF022 | DF040 |
| X-4 LOW DOWN | | 1300 | 00- | | DF040 |

**DF 041 CW** — øext. 310 mm / øint. 62 — 5,0 / 21,5 — OE

| BRAND MARCA | MODEL MODELO | C.C. | YEAR | FRONT | REAR |
|---|---|---|---|---|---|
| **HONDA** | | | | | |
| CBR 900 RR | | 900 | 98-99 | DF041 | DF013 |



**OE:** Original equipment (original replacement disc) - **OE:** Equipo original (disco de remplazo del original) For other models years previous to 1990 visit **www.galferonline.es** - Para otros modelos anteriores al año 1990 visitar **www.galferonline.es**
For consult TÜV (ABE) type approvals visit **www.galfermoto.com --> DOWNLOAD --> TÜV CERTIFICATIONS** - Para consultar las homologaciones TÜV (ABE) visitar **www.galfermoto.com --> DESCARGAS --> CERTIFICACIONES TÜV**

## DF 042 CW

øext. 310 mm øint. 58 | 5,0 21,5 | OE

| BRAND MARCA | MODEL MODELO | C.C. | YEAR | FRONT | REAR |
|---|---|---|---|---|---|
| **HONDA** | | | | | |
| | RVF 750 RR (RC45) | 750 | 94- | DF042 | |

## DF 048 W

øext. 220 mm øint. 105 | 4,2 | OE

| BRAND MARCA | MODEL MODELO | C.C. | YEAR | FRONT | REAR |
|---|---|---|---|---|---|
| **HONDA** | | | | | |
| | CBR 250 R | 250 | 11- | DF079 | DF048 |
| | CBR 250 R C-ABS | 250 | 11- | DF079 | DF048 |
| | CBR 300 R ABS | 300 | 14- | DF079 | DF048 |
| | XRE 300 | 300 | 09- | DF004 | DF048 |
| | XRE 300 C-ABS | 300 | 10- | DF004 | DF048 |
| | NX 4 FALCON | 400 | 03- | DF083 | DF048 |
| | XR 650 L | 650 | 93- | DF017 | DF048 |
| **HONDA BRAZIL** | | | | | |
| | XRE 300 | 300 | 09- | DF004 | DF048 |
| | XRE 300 C-ABS | 300 | 10- | DF004 | DF048 |
| **HONDA INDONESIA** | | | | | |
| | CBR 250 R | 250 | 11- | | DF048 |
| | CBR 250 R C-ABS | 250 | 11- | | DF048 |
| **HONDA MALASIA** | | | | | |
| | CBR 250 R | 250 | 11- | | DF048 |
| | CBR 250 R C-ABS | 250 | 11- | | DF048 |

## DF 049 W

øext. 256 mm øint. 144 | 5,0 | OE

| BRAND MARCA | MODEL MODELO | C.C. | YEAR | FRONT | REAR |
|---|---|---|---|---|---|
| **HONDA** | | | | | |
| | XRV 750 AFRICA TWIN | 750 | 90-93 | DF021 | DF049 |
| | XRV 750 AFRICA TWIN | 750 | 94- | DF021 | DF049 |
| | VARADERO | 1000 | 99-02 | DF676 | DF049 |

## DF 050 W

øext. 220 mm øint. 89 | 3,0 | OE

| BRAND MARCA | MODEL MODELO | C.C. | YEAR | FRONT | REAR |
|---|---|---|---|---|---|
| **HONDA** | | | | | |
| | GL 1500 SE GOLD WING | 1500 | 91- | DF053 | DF054 |

## DF 059 CW

øext. 296 mm øint. 62 | 5,0 23,0 | OE

| BRAND MARCA | MODEL MODELO | C.C. | YEAR | FRONT | REAR |
|---|---|---|---|---|---|
| **HONDA** | | | | | |
| | CB 400 FOUR | 400 | 97-00 | DF059 | DF007 |
| | CB 400 SB | 400 | 05- | DF059 | DF007 |
| | CB 400 SUPER BOL D'OR | 400 | 05- | DF059 | DF007 |
| | CB 400 SUPER FOUR | 400 | 05- | DF059 | DF007 |
| | CB 400 SF | 400 | 02-04 | DF059 | DF007 |
| | CB 600 HORNET | 600 | 98-99 | DF059 | DF013 |

## DF 061 CW

øext. 296 mm øint. 58 | 5,0 23,25 | OE

| BRAND MARCA | MODEL MODELO | C.C. | YEAR | FRONT | REAR |
|---|---|---|---|---|---|
| **HONDA** | | | | | |
| | 599 (USA) | 600 | 00-06 | DF061 | DF013 |
| | CB 600 HORNET /S | 600 | 00-06 | DF061 | DF013 |

## DF 062 CW

øext. 296 mm øint. 94 | 4,5 14,5 | OE

| BRAND MARCA | MODEL MODELO | C.C. | YEAR | FRONT | REAR |
|---|---|---|---|---|---|
| **HONDA** | | | | | |
| | 599 (USA) | 600 | 07- | DF062 | DF072 |
| | 599 (USA) ABS | 600 | 07- | DF062 | DF072 |
| | CB 600 HORNET | 600 | 07- | DF062 | DF072 |
| | CB 600 HORNET ABS | 600 | 07- | DF062 | DF072 |
| | CBR 600 F | 600 | 11- | DF062 | DF007 |
| | CBR 600 F ABS | 600 | 11- | DF062 | DF007 |

## DF 063 CW

øext. 296 mm øint. 94 | 5,0 12,5 | OE

| BRAND MARCA | MODEL MODELO | C.C. | YEAR | FRONT | REAR |
|---|---|---|---|---|---|
| **HONDA** | | | | | |
| | CBR 600 F4 i SPORT | 600 | 01-10 | DF063 | DF013 |
| | 919 (USA) | 900 | 01- | DF063 | DF007 |
| | CB 900 SF HORNET | 900 | 01- | DF063 | DF007 |
| | VTX 1800 C | 1800 | 01- | DF063 | DF054 |
| | VTX 1800 RETRO | 1800 | 03- | DF063 | DF054 |

## DF 064 W

øext. 185 mm øint. 64,4 | 3,5 | OE

| BRAND MARCA | MODEL MODELO | C.C. | YEAR | FRONT | REAR |
|---|---|---|---|---|---|
| **HONDA** | | | | | |
| | TSR 250 | 250 | 98- | DF027 | DF064 |

## DF 065 CW

øext. 296 mm øint. 58 | 4,5 18,0 | OE

| BRAND MARCA | MODEL MODELO | C.C. | YEAR | FRONT | REAR |
|---|---|---|---|---|---|
| **HONDA** | | | | | |
| | VTR 250 | 250 | 98-08 | DF065 | DF013 |
| | VTR 250 i | 250 | 09- | DF065 | |
| | VTR 250 F | 250 | 13- | DF065 | |

## DF 066 CWI-D

øext. 330 mm øint. 94 | 5,0 12,5 | OE

## DF 066 CRWI-D

øext. 330 mm øint. 94 | 5,0 12,5

| BRAND MARCA | MODEL MODELO | C.C. | YEAR | FRONT | REAR |
|---|---|---|---|---|---|
| **HONDA** | | | | | |
| | CBR 900 RR (929) | 929 | 00-01 | DF066 | DF013 |
| | CBR 900 RR (954) | 954 | 02- | DF066 | DF013 |

## DF 067 CW

øext. 310 mm øint. 62 | 5,0 18,5 | OE

| BRAND MARCA | MODEL MODELO | C.C. | YEAR | FRONT | REAR |
|---|---|---|---|---|---|
| **HONDA** | | | | | |
| | CB 1100 X 11 ELEVEN | 1100 | 00- | DF067 | DF028 |
| | CBR 1100 XX i SUP.BLACKBIRD | 1100 | 00- | DF067 | DF028 |
| | CB 1300 | 1300 | 01-02 | DF067 | |

## DF 068 CW

øext. 320 mm øint. 94 | 5,0 12,5 | OE

## DF 068 CRWI-D

øext. 320 mm øint. 94 | 5,0 12,5

| BRAND MARCA | MODEL MODELO | C.C. | YEAR | FRONT | REAR |
|---|---|---|---|---|---|
| **HONDA** | | | | | |
| | CBR 1000 RR FIREBLADE | 1000 | 06-07 | DF068 | DF013 |
| | VTR 1000 SP-1 | 1000 | 00-01 | DF068 | DF013 |
| | VTR 1000 SP-1 KIT | 1000 | 00-01 | DF068 | |
| | VTR 1000 SP-2 | 1000 | 02- | DF068 | DF013 |
| | RVT 1000 RC 51 (USA) | 1000 | 02- | DF068 | DF013 |
| | VFR 1200 FA | 1200 | 10-13 | DF068 | |
| | VFR 1200 FDA DCT | 1200 | 10-13 | DF068 | |

## DF 070 CW

øext. 310 mm øint. 94 | 5,0 12,5 | OE

## DF 070 CRWI-D

øext. 310 mm øint. 94 | 5,0 12,5

| BRAND MARCA | MODEL MODELO | C.C. | YEAR | FRONT | REAR |
|---|---|---|---|---|---|
| **HONDA** | | | | | |
| | CBR 600 RR | 600 | 03-04 | DF070 | DF013 |
| | CBR 600 RR | 600 | 05-06 | DF070 | DF013 |
| | CBR 600 RR | 600 | 07- | DF070 | DF013 |
| | CBR 600 RR | 600 | 09- | DF070 | DF013 |
| | CBR 600 RR C-ABS | 600 | 09-12 | DF070 | DF013 |
| | CBR 600 RR C-ABS | 600 | 13- | DF070 | DF013 |
| | VFR 800 ABS | 800 | 14- | DF070 | |
| | CB 1000 R | 1000 | 08- | DF070 | |
| | CB 1000 R ABS | 1000 | 08- | DF070 | |
| | CBR 1000 RR FIREBLADE | 1000 | 04-05 | DF070 | DF013 |
| | CB 1300 | 1300 | 03-04 | DF070 | DF028 |
| | CB 1300 F | 1300 | 10- | DF070 | DF028 |
| | CB 1300 S | 1300 | 05-09 | DF070 | DF028 |

| | | | | |
|---|---|---|---|---|
| CB 1300 SUPER BOL D'OR / ABS | 1300 | 05- | DF070 | DF028 |
| CB 1300 SUPER FOUR / ABS | 1300 | 05- | DF070 | DF028 |
| CTX 1300 C ABS | 1300 | 14- | DF070 | |

**DF 071 W** — øext. 220 mm, øint. 105 — 4,2 — OE

**DF 071 WS** — øext. 260 mm, øint. 105 — 4,0 — SP025

| BRAND MARCA | MODEL MODELO | C.C. | YEAR | FRONT | REAR |
|---|---|---|---|---|---|
| **HONDA** | | | | | |
| @ 150 | | 150 | 00- | DF071 | - |
| DYLAN 150 | | 150 | 02- | DF071 | - |
| PS 150i | | 150 | 06- | DF071 | - |
| SH 150 SCOOPY | | 150 | 01-04 | DF071 | - |
| SH 150 i SCOOPY | | 150 | 05- | DF071 | - |
| SH 150 i SCOOPY (TAMBOR TRAS) | | 150 | 09- | DF071 | - |

**DF 072 W** — øext. 240 mm, øint. 116,5 — 5,0 — OE

| BRAND MARCA | MODEL MODELO | C.C. | YEAR | FRONT | REAR |
|---|---|---|---|---|---|
| **HONDA** | | | | | |
| CBF 500 ABS | | 500 | 04- | DF009 | DF072 |
| CBF 500 N | | 500 | 04- | DF009 | DF072 |
| 599 (USA) | | 600 | 07- | DF062 | DF072 |
| 599 (USA) ABS | | 600 | 07- | DF062 | DF072 |
| CB 600 HORNET | | 600 | 07- | DF062 | DF072 |
| CB 600 HORNET ABS | | 600 | 07- | DF062 | DF072 |
| CBF 600 /S | | 600 | 04-07 | DF009 | DF072 |
| CBF 600 /S | | 600 | 08- | | DF072 |
| CBF 600 S ABS | | 600 | 08- | | DF072 |
| CBF 1000 | | 1000 | 06- | DF079 | DF072 |
| CBF 1000 ABS | | 1000 | 06- | DF079 | DF072 |

**DF 073 W** — øext. 256 mm, øint. 144,5 — 4,0 — OE

| BRAND MARCA | MODEL MODELO | C.C. | YEAR | FRONT | REAR |
|---|---|---|---|---|---|
| **HONDA** | | | | | |
| XL 600 V TRANSALP DER. | | 600 | 97-99 | DF073 | DF007 |
| XL 650 V TRANSALP DER. | | 650 | 00- | DF073 | DF007 |
| XL 700 V TRANSALP DER. | | 700 | 08- | DF073 | DF007 |
| XL 700 V TRANSALP DER. ABS | | 700 | 08- | DF073 | DF007 |

**DF 074 W** — øext. 320 mm, øint. 212 — 5,0 — OE

| BRAND MARCA | MODEL MODELO | C.C. | YEAR | FRONT | REAR |
|---|---|---|---|---|---|
| **HONDA** | | | | | |
| INTEGRA | | 700 | 12- | DF074 | DF075 |
| NC 700 S | | 700 | 12- | DF074 | DF075 |
| NC 700 S ABS | | 700 | 12- | DF074 | DF075 |
| NC 700 X | | 700 | 12- | DF074 | DF075 |
| NC 700 X ABS | | 700 | 12- | DF074 | DF075 |
| INTEGRA | | 750 | 14- | DF074 | DF075 |
| NC 750 S | | 750 | 14- | DF074 | DF075 |
| NC 750 S ABS | | 750 | 14- | DF074 | DF075 |
| NC 750 X | | 750 | 14- | DF074 | DF075 |
| NC 750 X ABS | | 750 | 14- | DF074 | DF075 |
| NM4-VULTUS | | 750 | 15- | DF074 | DF075 |

**DF 075 W** — øext. 240 mm, øint. 117,5 — 5,0 — OE

| BRAND MARCA | MODEL MODELO | C.C. | YEAR | FRONT | REAR |
|---|---|---|---|---|---|
| **HONDA** | | | | | |
| INTEGRA | | 700 | 12- | DF074 | DF075 |
| NC 700 S | | 700 | 12- | DF074 | DF075 |
| NC 700 S ABS | | 700 | 12- | DF074 | DF075 |
| NC 700 X | | 700 | 12- | DF074 | DF075 |
| NC 700 X ABS | | 700 | 12- | DF074 | DF075 |
| INTEGRA | | 750 | 14- | DF074 | DF075 |
| NC 750 S | | 750 | 14- | DF074 | DF075 |
| NC 750 S ABS | | 750 | 14- | DF074 | DF075 |
| NC 750 X | | 750 | 14- | DF074 | DF075 |
| NC 750 X ABS | | 750 | 14- | DF074 | DF075 |
| NM4-VULTUS | | 750 | 15- | DF074 | DF075 |

**DF 076 CWI-D** — øext. 320 mm, øint. 94 — 5,0 — 15,25 — OE

**DF 076 CRWI-D** — øext. 320 mm, øint. 94 — 5,0 — 15,25

| BRAND MARCA | MODEL MODELO | C.C. | YEAR | FRONT | REAR |
|---|---|---|---|---|---|
| **HONDA** | | | | | |
| CBR 1000 RR FIREBLADE | | 1000 | 08- | DF076 | DF013 |
| CBR 1000 RR FIREBLADE C-ABS | | 1000 | 09- | DF076 | DF013 |
| CBR 1000 RR FIREBLADE SP | | 1000 | 14-14 | DF076 | DF013 |
| CBR 1000 RR FIREBLADE SP | | 1000 | 15- | DF076 | DF013 |
| **HONDA MALASIA** | | | | | |
| CBR 1000 RR FIREBLADE C-ABS | | 1000 | 09- | DF076 | DF013 |

**DF 078 W** — øext. 220 mm, øint. 58 — 3,5 — OE

| BRAND MARCA | MODEL MODELO | C.C. | YEAR | FRONT | REAR |
|---|---|---|---|---|---|
| **HONDA** | | | | | |
| PCX 150 | | 150 | 13- | DF078 | - |
| **HONDA INDONESIA** | | | | | |
| PCX 150 | | 150 | 13- | DF078 | - |
| **HONDA MALASIA** | | | | | |
| PCX 150 | | 150 | 13- | DF078 | - |

**DF 079 CW** — øext. 296 mm, øint. 94 — 4,5 — 17,4 — OE

| BRAND MARCA | MODEL MODELO | C.C. | YEAR | FRONT | REAR |
|---|---|---|---|---|---|
| **HONDA** | | | | | |
| CBR 250 R | | 250 | 11- | DF079 | DF048 |
| CBR 250 R C-ABS | | 250 | 11- | DF079 | DF048 |
| CBR 300 R ABS | | 300 | 14- | DF079 | DF048 |
| CBF 1000 | | 1000 | 06- | DF079 | DF072 |
| CBF 1000 ABS | | 1000 | 06- | DF079 | DF072 |

**DF 080 W** — øext. 320 mm, øint. 211 — 5,0 — OE

| BRAND MARCA | MODEL MODELO | C.C. | YEAR | FRONT | REAR |
|---|---|---|---|---|---|
| **HONDA** | | | | | |
| CB 500 F | | 500 | 13- | DF080 | DF081 |
| CB 500 F ABS | | 500 | 13- | DF080 | DF081 |
| CB 500 X | | 500 | 13- | DF080 | DF081 |
| CB 500 X ABS | | 500 | 13- | DF080 | DF081 |
| CBR 500 R | | 500 | 13- | DF080 | DF081 |
| CBR 500 R ABS | | 500 | 13- | DF080 | DF081 |
| CB 650 F ABS | | 650 | 14- | DF080 | DF081 |
| CBR 650 F ABS | | 650 | 14- | DF080 | DF081 |

**DF 081 W** — øext. 240 mm, øint. 116,5 — 5,0 — OE

| BRAND MARCA | MODEL MODELO | C.C. | YEAR | FRONT | REAR |
|---|---|---|---|---|---|
| **HONDA** | | | | | |
| CB 500 F | | 500 | 13- | DF080 | DF081 |
| CB 500 F ABS | | 500 | 13- | DF080 | DF081 |
| CB 500 X | | 500 | 13- | DF080 | DF081 |
| CB 500 X ABS | | 500 | 13- | DF080 | DF081 |
| CBR 500 R | | 500 | 13- | DF080 | DF081 |
| CBR 500 R ABS | | 500 | 13- | DF080 | DF081 |
| CB 650 F ABS | | 650 | 14- | DF080 | DF081 |
| CBR 650 F ABS | | 650 | 14- | DF080 | DF081 |

**DF 083 W** — øext. 256 mm, øint. 144 — 4,5 — OE

| BRAND MARCA | MODEL MODELO | C.C. | YEAR | FRONT | REAR |
|---|---|---|---|---|---|
| **HONDA** | | | | | |
| SH SCOOPY 300 | | 300 | 07-10 | DF083 | DF083 |
| SH SCOOPY 300 | | 300 | 11- | DF083 | DF083 |
| SH SCOOPY 300 ABS | | 300 | 07- | DF083 | DF083 |
| NX 4 FALCON | | 400 | 03- | DF083 | DF048 |
| SILVER WING 400 | | 400 | 02-08 | DF083 | DF007 |
| FJS 600 SILVER WING | | 600 | 01- | DF083 | DF007 |

**DF 154 W** — øext. 280 mm, øint. 130 — 5,0 — OE

| BRAND MARCA | MODEL MODELO | C.C. | YEAR | FRONT | REAR |
|---|---|---|---|---|---|
| **KAWASAKI** | | | | | |
| ER-5 | | 500 | 97-00 | DF154 | - |
| ER-5 | | 500 | 01- | DF154 | - |
| GTR 1000 | | 1000 | 94- | DF167 | DF154 |

**DF 155 W** — øext. 230 mm, øint. 82 — 4,0 — OE

| BRAND MARCA | MODEL MODELO | C.C. | YEAR | FRONT | REAR |
|---|---|---|---|---|---|
| **KAWASAKI** | | | | | |
| ZX 7 RR (ZX750P1) | | 750 | 96- | DF168 | DF155 |
| ZXR 750 R | | 750 | 91-95 | DF168 | DF155 |



**OE:** Original equipment (original replacement disc) · **OE:** Equipo original (disco de remplazo del original) For other models years previous to 1990 visit **www.galferonline.es** · Para otros modelos anteriores al año 1990 visitar **www.galferonline.es**
For consult TÜV (ABE) type approvals visit **www.galfermoto.com --> DOWNLOAD --> TÜV CERTIFICATIONS** · Para consultar las homologaciones TÜV (ABE) visitar **www.galfermoto.com --> DESCARGAS --> CERTIFICACIONES TÜV**

| | | | | |
|---|---|---|---|---|
| ZX-9R NINJA | 900 | 94-95 | DF168 | DF155 |
| ZX-9R NINJA | 900 | 96-97 | DF168 | DF155 |

**DF 157 W** — øext. 230 mm / øint. 120 — 4,0 — OE

| BRAND MARCA | MODEL MODELO | C.C. | YEAR | FRONT | REAR |
|---|---|---|---|---|---|
| **KAWASAKI** | | | | | |
| KLE 500 | | 500 | 91- | DF175 | DF157 |
| KLR 650 C1/C2 | | 650 | 95-07 | DF156 | DF157 |

**DF 159 W** — øext. 270 mm / øint. 130 — 5,0 — OE

| BRAND MARCA | MODEL MODELO | C.C. | YEAR | FRONT | REAR |
|---|---|---|---|---|---|
| **KAWASAKI** | | | | | |
| GPZ 500 S | | 500 | 90-92 | DF159 | - |
| GPZ 500 S | | 500 | 93- | DF159 | |
| GPZ 900 R | | 900 | 90-96 | DF167 | DF159 |

**DF 161 W** — øext. 250 mm / øint. 130 — 5,0 — OE

| BRAND MARCA | MODEL MODELO | C.C. | YEAR | FRONT | REAR |
|---|---|---|---|---|---|
| **KAWASAKI** | | | | | |
| ZZR 1100 | | 1100 | 90-92 | DF169 | DF161 |

**DF 167 CW** — øext. 300 mm / øint. 61 — 5,0 / 13,5 — OE

| BRAND MARCA | MODEL MODELO | C.C. | YEAR | FRONT | REAR |
|---|---|---|---|---|---|
| **KAWASAKI** | | | | | |
| ZR 250 BALIUS II | | 250 | 02- | DF167 | |
| ZZR 250 (EX 250 H1) | | 250 | 90-97 | DF167 | |
| ZRX 400 / II | | 400 | 01- | DF167 | |
| ZEPHYR 550 | | 550 | 93-95 | DF167 | DF183 |
| ZEPHYR 550 | | 550 | 96- | DF167 | DF183 |
| ZL 600 ELIMINATOR | | 600 | 95- | DF167 | - |
| ZX 600 NINJA ZX-6 | | 600 | 93-94 | DF167 | DF188 |
| ZX-6R | | 600 | 95-97 | DF167 | DF193 |
| ZX-6R | | 600 | 00-02 | DF167 | DF193 |
| ZZR 600 | | 600 | 91-92 | DF167 | DF188 |
| ZZR 600 | | 600 | 93- | DF167 | DF183 |
| ZZR 600 HAMA | | 600 | 90- | DF167 | |
| ZX-6R 636 | | 636 | 02-02 | DF167 | DF193 |
| Z 750 LEFT/IZQ | | 750 | 04-06 | DF167 | |
| Z 750 RIGHT/DER | | 750 | 04-06 | DF167 | DF193 |
| Z 750 S LEFT/IZQ | | 750 | 05-06 | DF167 | |
| Z 750 S RIGHT/DER | | 750 | 05-06 | DF167 | DF193 |
| ZEPHYR 750 | | 750 | 91- | DF167 | DF188 |
| ZR-7 S DER./RIGHT | | 750 | 99-04 | DF167 | |
| ZR-7 S IZQ/LEFT | | 750 | 99-04 | DF167 | |
| ZR-7 S DER./RIGHT | | 750 | 05- | DF167 | |
| ZR-7 S IZQ/LEFT | | 750 | 05- | DF167 | |
| W 800 | | 800 | 11- | DF167 | - |
| GPZ 900 R | | 900 | 90-96 | DF167 | DF159 |
| GTR 1000 | | 1000 | 94- | DF167 | DF154 |
| Z 1000 | | 1000 | 03-06 | DF167 | DF193 |
| GPZ 1100 (ZX1100E1) LEFT/IZQ | | 1100 | 95- | DF167 | |
| GPZ 1100 (ZX1100E1) RIGHT/DER | | 1100 | 95- | DF167 | |
| GPZ 1100 S | | 1100 | 95- | DF167 | |
| ZX-12 R | | 1200 | 04- | DF167 | DF199 |
| **SUZUKI** | | | | | |
| GSX 250 FX | | 250 | 02- | DF167 | |

**DF 168 CW** — øext. 320 mm / øint. 61 — 5,0 / 13,5 — OE

**DF 168 CRWi-D** — øext. 320 mm / øint. 61 — 5,0 / 13,5

| BRAND MARCA | MODEL MODELO | C.C. | YEAR | FRONT | REAR |
|---|---|---|---|---|---|
| **KAWASAKI** | | | | | |
| ZX 7 RR (ZX750P1) | | 750 | 96- | DF168 | DF155 |
| ZXR 750 R | | 750 | 91-95 | DF168 | DF155 |
| ZX-9R NINJA | | 900 | 94-95 | DF168 | DF155 |
| ZX-9R NINJA | | 900 | 96-97 | DF168 | DF155 |
| ZX-9R NINJA | | 900 | 02- | DF168 | DF193 |
| ZZR 1100 | | 1100 | 93-01 | DF168 | DF186 |
| ZZR 1200 | | 1200 | 01- | DF168 | DF197 |
| ZRX 1200 | | 1200 | 04- | DF168 | DF198 |
| ZX-12 R | | 1200 | 00-03 | DF168 | DF199 |
| VN 1500 MEAN STREAK | | 1500 | 01- | DF168 | |
| VN 1600 MEAN STREAK | | 1600 | 04-04 | DF168 | |

**DF 169 CW** — øext. 310 mm / øint. 61 — 5,0 / 13,5 — OE

| BRAND MARCA | MODEL MODELO | C.C. | YEAR | FRONT | REAR |
|---|---|---|---|---|---|
| **KAWASAKI** | | | | | |
| ZXR 400 | | 400 | 90-94 | DF169 | DF183 |
| ZXR 400 | | 400 | 95-98 | DF169 | DF183 |
| ZX-9R NINJA | | 900 | 00-01 | DF169 | DF193 |
| ZEPHYR 1100 | | 1100 | 93-95 | DF169 | DF196 |
| ZEPHYR 1100 LEFT/IZQ | | 1100 | 96- | DF169 | |
| ZEPHYR 1100 RIGHT/DER | | 1100 | 96- | DF169 | DF196 |
| ZRX 1100 | | 1100 | 97-00 | DF169 | DF197 |
| ZZR 1100 | | 1100 | 90-92 | DF169 | DF161 |
| ZRX 1200 S | | 1200 | 02-03 | DF169 | DF198 |
| ZRX 1200 S | | 1200 | 04- | DF169 | DF198 |
| ZRX 1200 R | | 1200 | 04- | DF169 | DF198 |

**DF 175 W** — øext. 300 mm / øint. 130 — 5,0 — OE

| BRAND MARCA | MODEL MODELO | C.C. | YEAR | FRONT | REAR |
|---|---|---|---|---|---|
| **KAWASAKI** | | | | | |
| KLE 500 | | 500 | 91- | DF175 | DF157 |

**DF 177 W** — øext. 270 mm / øint. 130 — 5,0 — OE

| BRAND MARCA | MODEL MODELO | C.C. | YEAR | FRONT | REAR |
|---|---|---|---|---|---|
| **KAWASAKI** | | | | | |
| EN 500 | | 500 | 90-93 | DF177 | - |

**DF 178 CW** — øext. 296 mm / øint. 61 — 5,0 / 13,5 — OE

| BRAND MARCA | MODEL MODELO | C.C. | YEAR | FRONT | REAR |
|---|---|---|---|---|---|
| **KAWASAKI** | | | | | |
| ZX-6R | | 600 | 98-99 | DF178 | DF193 |
| ZX-9R NINJA | | 900 | 98-99 | DF178 | DF193 |

**DF 180 CW** — øext. 280 mm / øint. 80 — 5,0 / 0,0 — OE

| BRAND MARCA | MODEL MODELO | C.C. | YEAR | FRONT | REAR |
|---|---|---|---|---|---|
| **KAWASAKI** | | | | | |
| ZX-6RR | | 600 | 03-04 | DF180 | DF193 |
| ZX-6R 636 | | 636 | 03-04 | DF180 | DF193 |

**DF 183 W** — øext. 240 mm / øint. 100 — 4,0 — OE

| BRAND MARCA | MODEL MODELO | C.C. | YEAR | FRONT | REAR |
|---|---|---|---|---|---|
| **KAWASAKI** | | | | | |
| ZXR 400 | | 400 | 90-94 | DF169 | DF183 |
| ZXR 400 | | 400 | 95-98 | DF169 | DF183 |
| ZEPHYR 550 | | 550 | 93-95 | DF167 | DF183 |
| ZEPHYR 550 | | 550 | 96- | DF167 | DF183 |
| ZZR 600 | | 600 | 93- | DF167 | DF183 |

**DF 184 CW** — øext. 300 mm / øint. 80 — 5,0 / 0,0 — OE

**DF 184 CRWi-D** — øext. 300 mm / øint. 80 — 5,0 / 0,0

| BRAND MARCA | MODEL MODELO | C.C. | YEAR | FRONT | REAR |
|---|---|---|---|---|---|
| **KAWASAKI** | | | | | |
| ZX-6RR | | 600 | 05-06 | DF184 | DF193 |
| ZX-6R | | 600 | 07-08 | DF184 | DF193 |
| ZX-6R | | 600 | 09- | DF184 | DF193 |
| ZX-6R 636 | | 636 | 05-12 | DF184 | DF193 |
| ER-6 F / NINJA 650 R (USA) LEFT / IZQ | | 650 | 05- | DF184 | |
| ER-6 F / NINJA 650 R (USA) RIGHT / DER | | 650 | 05- | DF184 | DF193 |
| ER-6 N LEFT / IZQ | | 650 | 05- | DF184 | |
| ER-6 N RIGHT / DER | | 650 | 05- | DF184 | DF193 |
| VERSYS 650 LEFT /IZQ | | 650 | 06-07 | DF184 | |
| VERSYS 650 RIGHT / DER | | 650 | 06-07 | DF184 | DF193 |
| VERSYS 650 LEFT /IZQ | | 650 | 08-09 | DF184 | |
| VERSYS 650 RIGHT / DER | | 650 | 08-09 | DF184 | DF193 |
| VERSYS 650 LEFT /IZQ | | 650 | 10-14 | DF184 | |
| VERSYS 650 RIGHT / DER | | 650 | 10-14 | DF184 | DF193 |
| VERSYS 650 | | 650 | 15- | DF184 | DF191 |
| Z 750 | | 750 | 07- | DF184 | DF191 |
| Z 750 ABS | | 750 | 07- | DF184 | DF191 |
| Z 750 R | | 750 | 11- | DF184 | DF191 |
| Z 750 R SE | | 750 | 12- | DF184 | DF191 |
| VERSYS 1000 | | 1000 | 12-14 | DF184 | DF191 |
| VERSYS 1000 | | 1000 | 15- | DF184 | DF191 |
| Z 1000 | | 1000 | 07-08 | DF184 | DF191 |
| Z 1000 | | 1000 | 08-09 | DF184 | DF191 |
| Z 1000 | | 1000 | 10-14 | DF184 | DF191 |

| | | | | |
|---|---|---|---|---|
| Z 1000 ABS | 1000 | 14- | DF184 | DF191 |
| Z 1000 | 1000 | 15- | DF184 | DF191 |
| Z 1000 SX | 1000 | 11- | DF184 | DF191 |
| ZX 10R | 1000 | 04-05 | DF184 | DF193 |
| ZX 10R | 1000 | 06-07 | DF184 | DF193 |
| ZG 1400 CONCOURS | 1400 | 08- | DF184 | |
| ZG 1400 CONCOURS ABS | 1400 | 08-09 | DF184 | DF206 |
| ZG 1400 CONCOURS ABS | 1400 | 10- | DF184 | DF206 |
| **KAWASAKI INDONESIA** | | | | |
| ZX-6R | 600 | 09- | DF184 | DF193 |
| ER-6 N LEFT / IZQ | 650 | 09- | DF184 | |
| ER-6 N RIGHT / DER | 650 | 09- | DF184 | DF193 |
| **KAWASAKI MALASIA** | | | | |
| ER-6 F / LEFT / IZQ | 650 | 05- | DF184 | |
| ER-6 F / RIGHT / DER | 650 | 05- | DF184 | DF193 |
| ER-6 N LEFT / IZQ | 650 | 05- | DF184 | |
| ER-6 N RIGHT / DER | 650 | 05- | DF184 | DF193 |
| VERSYS 650 LEFT /IZQ | 650 | 10- | DF184 | |
| VERSYS 650 RIGHT / DER | 650 | 10- | DF184 | DF193 |

**DF 186 W** — øext. / øint. — 250 mm — 100 — 5,0 — OE

| BRAND MARCA | MODEL MODELO | C.C. | YEAR | FRONT | REAR |
|---|---|---|---|---|---|
| **KAWASAKI** | | | | | |
| ZZR 1100 | | 1100 | 93-01 | DF168 | DF186 |

**DF 188 W** — øext. / øint. — 230 mm — 100 — 4,0 — OE

| BRAND MARCA | MODEL MODELO | C.C. | YEAR | FRONT | REAR |
|---|---|---|---|---|---|
| **KAWASAKI** | | | | | |
| ZX 600 NINJA ZX-6 | | 600 | 93-94 | DF167 | DF188 |
| ZZR 600 | | 600 | 91-92 | DF167 | DF188 |
| ZEPHYR 750 | | 750 | 91- | DF167 | DF188 |

**DF 190 CW** — øext. / øint. — 310 mm — 80 — 5,0 / 0,0 — OE — EXPORT ORIGINAL PARTS

**DF 190 CRWi-D** — øext. / øint. — 310 mm — 80 — 5,0 / 0,0 — EXPORT ORIGINAL PARTS

| BRAND MARCA | MODEL MODELO | C.C. | YEAR | FRONT | REAR |
|---|---|---|---|---|---|
| **KAWASAKI** | | | | | |
| ZX-6R 636 | | 636 | 13- | DF190 | DF193 |
| ZX-6R 636 ABS | | 636 | 13- | DF190 | DF193 |
| Z 800 | | 800 | 13- | DF190 | DF191 |
| Z 800 ABS | | 800 | 13- | DF190 | DF191 |
| Z 800e | | 800 | 13- | DF190 | DF191 |
| Z 800e ABS | | 800 | 13- | DF190 | DF191 |
| ZX 10R | | 1000 | 08-10 | DF190 | DF193 |
| ZX 10R | | 1000 | 11- | DF190 | DF193 |
| ZX 10R ABS | | 1000 | 11- | DF190 | DF193 |
| GTR 1400 | | 1400 | 07-09 | DF190 | |
| GTR 1400 | | 1400 | 10- | DF190 | |
| GTR 1400 GRAND TOUR | | 1400 | 10- | DF190 | |
| ZZR 1400 | | 1400 | 06-11 | DF190 | DF191 |
| ZZR 1400 | | 1400 | 12- | DF190 | DF191 |
| ZX-14 R | | 1400 | 06- | DF190 | DF191 |
| ZX-14 R ABS | | 1400 | 14- | DF190 | DF191 |
| **KAWASAKI MALASIA** | | | | | |
| Z 800 | | 800 | 13- | DF190 | DF191 |
| Z 800 ABS | | 800 | 13- | DF190 | DF191 |
| Z 800e | | 800 | 13- | DF190 | DF191 |
| Z 800e ABS | | 800 | 13- | DF190 | DF191 |

**DF 191 W** — øext. / øint. — 250 mm — 110 — 5,0 — OE

| BRAND MARCA | MODEL MODELO | C.C. | YEAR | FRONT | REAR |
|---|---|---|---|---|---|
| **KAWASAKI** | | | | | |
| VERSYS 650 | | 650 | 15- | DF184 | DF191 |
| Z 750 | | 750 | 07- | DF184 | DF191 |
| Z 750 ABS | | 750 | 07- | DF184 | DF191 |
| Z 750 R | | 750 | 11- | DF184 | DF191 |
| Z 750 R SE | | 750 | 12- | DF184 | DF191 |
| Z 800 | | 800 | 13- | DF190 | DF191 |
| Z 800 ABS | | 800 | 13- | DF190 | DF191 |
| Z 800e | | 800 | 13- | DF190 | DF191 |
| Z 800e ABS | | 800 | 13- | DF190 | DF191 |
| VERSYS 1000 | | 1000 | 12-14 | DF184 | DF191 |
| VERSYS 1000 | | 1000 | 15- | DF184 | DF191 |
| Z 1000 | | 1000 | 07-08 | DF184 | DF191 |
| Z 1000 | | 1000 | 08-09 | DF184 | DF191 |
| Z 1000 | | 1000 | 10-14 | DF184 | DF191 |
| Z 1000 ABS | | 1000 | 14- | DF184 | DF191 |
| Z 1000 | | 1000 | 15- | DF184 | DF191 |
| Z 1000 SX | | 1000 | 11- | DF184 | DF191 |
| ZZR 1400 | | 1400 | 06-11 | DF190 | DF191 |
| ZZR 1400 | | 1400 | 12- | DF190 | DF191 |
| ZX-14 R | | 1400 | 06- | DF190 | DF191 |
| ZX-14 R ABS | | 1400 | 14- | DF190 | DF191 |
| **KAWASAKI MALASIA** | | | | | |
| Z 800 | | 800 | 13- | DF190 | DF191 |
| Z 800 ABS | | 800 | 13- | DF190 | DF191 |
| Z 800e | | 800 | 13- | DF190 | DF191 |
| Z 800e ABS | | 800 | 13- | DF190 | DF191 |

**DF 193 W** — øext. / øint. — 220 mm — 100 — 5,0 — OE

**DF 193 WA** — øext. / øint. — 220 mm — 100 — 5,0

| BRAND MARCA | MODEL MODELO | C.C. | YEAR | FRONT | REAR |
|---|---|---|---|---|---|
| **KAWASAKI** | | | | | |
| ZX-6R | | 600 | 95-97 | DF167 | DF193 |
| ZX-6R | | 600 | 98-99 | DF178 | DF193 |
| ZX-6R | | 600 | 00-02 | DF167 | DF193 |
| ZX-6RR | | 600 | 03-04 | DF180 | DF193 |
| ZX-6RR | | 600 | 05-06 | DF184 | DF193 |
| ZX-6R | | 600 | 07-08 | DF184 | DF193 |
| ZX-6R | | 600 | 09- | DF184 | DF193 |
| ZX-6R 636 | | 636 | 02-02 | DF167 | DF193 |
| ZX-6R 636 | | 636 | 03-04 | DF180 | DF193 |
| ZX-6R 636 | | 636 | 05-12 | DF184 | DF193 |
| ZX-6R 636 | | 636 | 13- | DF190 | DF193 |
| ZX-6R 636 ABS | | 636 | 13- | DF190 | DF193 |
| ER-6 F / NINJA 650 R (USA) RIGHT / DER | | 650 | 05- | DF184 | DF193 |
| ER-6 N RIGHT / DER | | 650 | 05- | DF184 | DF193 |
| VERSYS 650 RIGHT / DER | | 650 | 06-07 | DF184 | DF193 |
| VERSYS 650 RIGHT / DER | | 650 | 08-09 | DF184 | DF193 |
| VERSYS 650 RIGHT / DER | | 650 | 10-14 | DF184 | DF193 |
| Z 750 RIGHT/DER | | 750 | 04-06 | DF167 | DF193 |
| Z 750 S RIGHT/DER | | 750 | 05-06 | DF167 | DF193 |
| ZX-9R NINJA | | 900 | 98-99 | DF178 | DF193 |
| ZX-9R NINJA | | 900 | 00-01 | DF169 | DF193 |
| ZX-9R NINJA | | 900 | 02- | DF168 | DF193 |
| Z 1000 | | 1000 | 03-06 | DF167 | DF193 |
| ZX 10R | | 1000 | 04-05 | DF184 | DF193 |
| ZX 10R | | 1000 | 06-07 | DF184 | DF193 |
| ZX 10R | | 1000 | 08-10 | DF190 | DF193 |
| ZX 10R | | 1000 | 11- | DF190 | DF193 |
| ZX 10R ABS | | 1000 | 11- | DF190 | DF193 |
| **KAWASAKI INDONESIA** | | | | | |
| ZX-6R | | 600 | 09- | DF184 | DF193 |
| ER-6 N RIGHT / DER | | 650 | 09- | DF184 | DF193 |
| **KAWASAKI MALASIA** | | | | | |
| ER-6 F / RIGHT / DER | | 650 | 05- | DF184 | DF193 |
| ER-6 N RIGHT / DER | | 650 | 05- | DF184 | DF193 |
| VERSYS 650 RIGHT / DER | | 650 | 10- | DF184 | DF193 |

**DF 196 W** — øext. / øint. — 240 mm — 130 — 5,0 — OE

| BRAND MARCA | MODEL MODELO | C.C. | YEAR | FRONT | REAR |
|---|---|---|---|---|---|
| **KAWASAKI** | | | | | |
| ZEPHYR 1100 | | 1100 | 92-92 | | DF196 |
| ZEPHYR 1100 | | 1100 | 93-95 | DF169 | DF196 |
| ZEPHYR 1100 RIGHT/DER | | 1100 | 96- | DF169 | DF196 |

**DF 197 W** — øext. / øint. — 250 mm — 100 — 5,0 — OE

| BRAND MARCA | MODEL MODELO | C.C. | YEAR | FRONT | REAR |
|---|---|---|---|---|---|
| **KAWASAKI** | | | | | |
| ZRX 1100 | | 1100 | 97-00 | DF169 | DF197 |
| ZZR 1200 | | 1200 | 01- | DF168 | DF197 |

**DF 198 W** — øext. / øint. — 250 mm — 100 — 5,0 — OE

| BRAND MARCA | MODEL MODELO | C.C. | YEAR | FRONT | REAR |
|---|---|---|---|---|---|
| **KAWASAKI** | | | | | |
| ZRX 1200 | | 1200 | 04- | DF168 | DF198 |
| ZRX 1200 S | | 1200 | 02-03 | DF169 | DF198 |
| ZRX 1200 S | | 1200 | 04- | DF169 | DF198 |
| ZRX 1200 R | | 1200 | 04- | DF169 | DF198 |

**DF 199 W** — øext. / øint. — 230 mm — 100 — 5,0 — OE

| BRAND MARCA | MODEL MODELO | C.C. | YEAR | FRONT | REAR |
|---|---|---|---|---|---|
| **KAWASAKI** | | | | | |
| ZX-12 R | | 1200 | 00-03 | DF168 | DF199 |
| ZX-12 R | | 1200 | 04- | DF167 | DF199 |



**OE:** Original equipment (original replacement disc) • **OE:** Equipo original (disco de remplazo del original) For other models years previous to 1990 visit **www.galferonline.es** • Para otros modelos anteriores al año 1990 visitar **www.galferonline.es**
For consult TÜV (ABE) type approvals visit **www.galfermoto.com --> DOWNLOAD --> TÜV CERTIFICATIONS** • Para consultar las homologaciones TÜV (ABE) visitar **www.galfermoto.com --> DESCARGAS --> CERTIFICACIONES TÜV**

**DF 203 W** — øext. 290 mm / øint. 130 — 4,5 — OE

**DF 203 FLW** — øext. 290 mm / øint. 130 — 4,5 — OE

**DF 203 CW** — øext. 290 mm / øint. 130 — 5,5

| BRAND MARCA | MODEL MODELO | C.C. | YEAR | FRONT | REAR |
|---|---|---|---|---|---|
| **KAWASAKI** | | | | | |
| | NINJA 250 R | 250 | 08-12 | DF203 | DF204 |
| **KAWASAKI INDONESIA** | | | | | |
| | NINJA 250 R | 250 | 08-12 | DF203 | DF204 |
| **KAWASAKI MALASIA** | | | | | |
| | NINJA 250 R | 250 | 08-12 | DF203 | DF204 |
| | Z 250 | 250 | 13- | DF203 | DF204 |

**DF 204 W** — øext. 220 mm / øint. 101 — 4,6 — OE

| BRAND MARCA | MODEL MODELO | C.C. | YEAR | FRONT | REAR |
|---|---|---|---|---|---|
| **KAWASAKI** | | | | | |
| | NINJA 250 R | 250 | 08-12 | DF203 | DF204 |
| | Z 250 SL | 250 | 15- | DF205 | DF204 |
| | NINJA 300 R | 300 | 13- | DF205 | DF204 |
| | NINJA 300 R SP (ABS) | 300 | 13- | DF205 | DF204 |
| | Z 300 | 300 | 15- | DF205 | DF204 |
| **KAWASAKI INDONESIA** | | | | | |
| | NINJA 250 R | 250 | 08-12 | DF203 | DF204 |
| **KAWASAKI MALASIA** | | | | | |
| | NINJA 250 R | 250 | 08-12 | DF203 | DF204 |
| | Z 250 | 250 | 13- | DF203 | DF204 |

**DF 205 CW** — øext. 290 mm / øint. 130 — 4,5 — OE

| BRAND MARCA | MODEL MODELO | C.C. | YEAR | FRONT | REAR |
|---|---|---|---|---|---|
| **KAWASAKI** | | | | | |
| | Z 250 SL | 250 | 15- | DF205 | DF204 |
| | NINJA 300 R | 300 | 13- | DF205 | DF204 |
| | NINJA 300 R SP (ABS) | 300 | 13- | DF205 | DF204 |
| | Z 300 | 300 | 15- | DF205 | DF204 |

**DF 206 W** — øext. 270 mm / øint. 110 — 5,0 — OE

| BRAND MARCA | MODEL MODELO | C.C. | YEAR | FRONT | REAR |
|---|---|---|---|---|---|
| **KAWASAKI** | | | | | |
| | ZG 1400 CONCOURS ABS | 1400 | 08-09 | DF184 | DF206 |
| | ZG 1400 CONCOURS ABS | 1400 | 10- | DF184 | DF206 |

**DF 307 W** — øext. 240 mm / øint. 89 — 4,0 — OE

| BRAND MARCA | MODEL MODELO | C.C. | YEAR | FRONT | REAR |
|---|---|---|---|---|---|
| **KAWASAKI** | | | | | |
| | J 300 | 300 | 14- | | DF307 |
| | J 300 SE | 300 | 14- | | DF307 |
| **SUZUKI** | | | | | |
| | GSX 400 INAZUMA | 400 | 00- | DF317 | DF307 |
| | RF 400 R | 400 | 93- | DF317 | DF307 |
| | SFV 400 GLADIUS RIGHT/DER | 400 | 10- | DF337 | DF307 |
| | SV 400 /S IZ. | 400 | 99- | DF317 | DF307 |
| | GSF 600 N BANDIT | 600 | 95-99 | DF317 | DF307 |
| | GSF 600 N BANDIT IZQ. | 600 | 00- | DF317 | DF307 |
| | GSX 600 F IZQ. (KATANA 600 USA) | 600 | 98-03 | DF317 | DF307 |
| | GSX 600 F IZQ. (KATANA 600 USA) | 600 | 04- | DF337 | DF307 |
| | RF 600 R | 600 | 93- | DF317 | DF307 |
| | GSF 650 BANDIT /S IZQ. | 650 | 05-05 | DF337 | DF307 |
| | SV 650 /S IZQ. | 650 | 99-02 | DF317 | DF307 |
| | GSX 750 F IZQ | 750 | 98- | DF321 | DF307 |
| | GSX 750 F VS IZQ. (KATANA 750 USA) | 750 | 99-02 | DF317 | DF307 |
| | GSX 750 F IZQ | 750 | 03- | DF337 | DF307 |
| | GSX R 750 L, LM, W | 750 | 91-93 | DF690 | DF307 |
| | GSX R 750 W | 750 | 94-95 | DF690 | DF307 |
| | RF 900 R | 900 | 94-95 | DF314 | DF307 |
| | RF 900 RS2 | 900 | 96- | DF690 | DF307 |
| | GSX R 1100 W | 1100 | 93- | DF690 | DF307 |
| | GS 1200 SS | 1200 | 01- | DF314 | DF307 |
| | GSF 1200 BANDIT | 1200 | 95-99 | DF314 | DF307 |
| | GSF 1200 BANDIT / S | 1200 | 00-05 | DF314 | DF307 |
| | INAZUMA 1200 | 1200 | 98- | DF314 | DF307 |
| | GSX 1300 R HAYABUSA | 1300 | 99-07 | DF320 | DF307 |

**DF 312 W** — øext. 210 mm / øint. 81 — 4,0 — OE

| BRAND MARCA | MODEL MODELO | C.C. | YEAR | FRONT | REAR |
|---|---|---|---|---|---|
| **SUZUKI** | | | | | |
| | RGV 250 GAMMA | 250 | 91-96 | DF321 | DF312 |
| | GSX R 400 R | 400 | 90- | DF321 | DF312 |

**DF 314 CW** — øext. 310 mm / øint. 64 — 5,0 / 19,5 — OE

| BRAND MARCA | MODEL MODELO | C.C. | YEAR | FRONT | REAR |
|---|---|---|---|---|---|
| **SUZUKI** | | | | | |
| | GSX 400 F BANDIT | 400 | 90- | DF314 | DF316 |
| | GS 500 E | 500 | 96- | DF314 | DF316 |
| | GS 500 F | 500 | 06- | DF314 | DF316 |
| | RF 900 R | 900 | 94-95 | DF314 | DF307 |
| | GS 1200 SS | 1200 | 01- | DF314 | DF307 |
| | GSF 1200 BANDIT | 1200 | 95-99 | DF314 | DF307 |
| | GSF 1200 BANDIT / S | 1200 | 00-05 | DF314 | DF307 |
| | GSX 1200 | 1200 | 99- | DF314 | |
| | INAZUMA 1200 | 1200 | 98- | DF314 | DF307 |

**DF 315 W** — øext. 300 mm / øint. 121 — 4,0 — OE

| BRAND MARCA | MODEL MODELO | C.C. | YEAR | FRONT | REAR |
|---|---|---|---|---|---|
| **SUZUKI** | | | | | |
| | DR 650 RL,RM,RSL | 650 | 91-91 | DF315 | |
| | DR 650 RSE | 650 | 92-93 | DF315 | |
| | XF 650 FREEWIND | 650 | 97- | DF315 | DF328 |
| | DR 800 S, SL BIG | 800 | 90-91 | DF315 | |
| | DR 800 S BIG | 800 | 92- | DF315 | |

**DF 316 W** — øext. 250 mm / øint. 84 — 4,0 — OE

| BRAND MARCA | MODEL MODELO | C.C. | YEAR | FRONT | REAR |
|---|---|---|---|---|---|
| **SUZUKI** | | | | | |
| | BANDIT 250 | 250 | 90- | | DF316 |
| | GSX 400 F BANDIT | 400 | 90- | DF314 | DF316 |
| | GSX 400 IMPULSE (Japan) | 400 | 94-98 | DF317 | DF316 |
| | GSX 400 IMPULSE (Japan) | 400 | 99- | DF317 | DF316 |
| | GS 500 E | 500 | 96- | DF314 | DF316 |
| | GS 500 F | 500 | 06- | DF314 | DF316 |
| | GSX 600 F | 600 | 91-97 | DF317 | DF316 |

**DF 317 CW** — øext. 290 mm / øint. 64 — 5,0 / 19,5 — OE

| BRAND MARCA | MODEL MODELO | C.C. | YEAR | FRONT | REAR |
|---|---|---|---|---|---|
| **SUZUKI** | | | | | |
| | GSX 400 IMPULSE (Japan) | 400 | 94-98 | DF317 | DF316 |
| | GSX 400 IMPULSE (Japan) | 400 | 99- | DF317 | DF316 |
| | GSX 400 INAZUMA | 400 | 00- | DF317 | DF307 |
| | RF 400 R | 400 | 93- | DF317 | DF307 |
| | SV 400 /S DER. | 400 | 99- | DF317 | |
| | SV 400 /S IZ. | 400 | 99- | DF317 | DF307 |
| | GSF 600 N BANDIT | 600 | 95-99 | DF317 | DF307 |
| | GSF 600 N BANDIT DER. | 600 | 00- | DF317 | |
| | GSF 600 N BANDIT IZQ. | 600 | 00- | DF317 | DF307 |
| | GSX 600 F | 600 | 91-97 | DF317 | DF316 |
| | GSX 600 F DER. (KATANA 600 USA) | 600 | 98-03 | DF317 | |
| | GSX 600 F IZQ. (KATANA 600 USA) | 600 | 98-03 | DF317 | DF307 |
| | RF 600 R | 600 | 93- | DF317 | DF307 |
| | SV 650 /S DER. | 650 | 99-02 | DF317 | |
| | SV 650 /S IZQ. | 650 | 99-02 | DF317 | DF307 |
| | GSX 750 F VS DER. (KATANA 750 USA) | 750 | 99-02 | DF317 | |
| | GSX 750 F VS IZQ. (KATANA 750 USA) | 750 | 99-02 | DF317 | DF307 |

**DF 318 W** — øext. 220 mm / øint. 100 — 4,0 — OE

| BRAND MARCA | MODEL MODELO | C.C. | YEAR | FRONT | REAR |
|---|---|---|---|---|---|
| **SUZUKI** | | | | | |
| | UH 150 BURGMAN | 150 | 02- | DF318 | DF319 |

**DF 319 W** — øext. 220 mm / øint. 64 — 4,0 — OE

| BRAND MARCA | MODEL MODELO | C.C. | YEAR | FRONT | REAR |
|---|---|---|---|---|---|
| **SUZUKI** | | | | | |
| | UH 150 BURGMAN | 150 | 02- | DF318 | DF319 |

## DF 320 CW / DF 320 CRWi-D

øext. 320 mm | øint. 69 | 5,0 / 0,0 | OE

| BRAND MARCA | MODEL MODELO | C.C. | YEAR | FRONT | REAR |
|---|---|---|---|---|---|
| SUZUKI | | | | | |
| GSX R 600 SRAD | | 600 | 97-03 | DF320 | DF339 |
| GSX R 750 SRAD | | 750 | 96-99 | DF320 | DF339 |
| GSX R 750 SRAD | | 750 | 00-03 | DF320 | DF339 |
| GSX R 1000 | | 1000 | 01-02 | DF320 | DF339 |
| TL 1000 R | | 1000 | 98- | DF320 | DF339 |
| TL 1000 S | | 1000 | 97- | DF320 | DF339 |
| GSX 1300 R HAYABUSA | | 1300 | 99-07 | DF320 | DF307 |
| GSX 1400 | | 1400 | 01- | DF320 | DF346 |

## DF 321 CW / DF 321 CRWi-D

øext. 300 mm | øint. 64 | 5,0 / 19,5 | OE

| BRAND MARCA | MODEL MODELO | C.C. | YEAR | FRONT | REAR |
|---|---|---|---|---|---|
| SUZUKI | | | | | |
| RGV 250 GAMMA | | 250 | 91-96 | DF321 | DF312 |
| GSX R 400 R | | 400 | 90- | DF321 | DF312 |
| GSX 750 F DER. | | 750 | 98- | DF321 | |
| GSX 750 F IZQ | | 750 | 98- | DF321 | DF307 |
| VZ 800 MARAUDER | | 800 | 97- | DF321 | - |

## DF 322 CW / DF 322 CRWi-D

øext. 300 mm | øint. 69 | 5,0 / 0,0 | OE

| BRAND MARCA | MODEL MODELO | C.C. | YEAR | FRONT | REAR |
|---|---|---|---|---|---|
| SUZUKI | | | | | |
| GSX R 600 SRAD | | 600 | 04-05 | DF322 | DF339 |
| GSX R 750 SRAD | | 750 | 04-05 | DF322 | DF339 |
| GSX R 1000 | | 1000 | 03-03 | DF322 | DF339 |
| GSX R 1000 | | 1000 | 04-04 | DF322 | DF339 |

## DF 323 CW / DF 323 CRWi-D

øext. 310 mm | øint. 69 | 5,0 / 0,0 | OE

| BRAND MARCA | MODEL MODELO | C.C. | YEAR | FRONT | REAR |
|---|---|---|---|---|---|
| KAWASAKI | | | | | |
| KLV 1000 LEFT/IZQ | | 1000 | 04- | DF323 | |
| KLV 1000 RIGHT/DER | | 1000 | 04- | DF323 | DF361 |
| SUZUKI | | | | | |
| DL 650 V-STORM DER. | | 650 | 04-06 | DF323 | |
| DL 650 V-STORM IZQ. | | 650 | 04-06 | DF323 | DF361 |
| DL 1000 V-STORM DER. | | 1000 | 01-13 | DF323 | |
| DL 1000 V-STORM IZQ. | | 1000 | 01-13 | DF323 | DF361 |
| SV 1000 | | 1000 | 03- | DF323 | DF339 |
| SV 1000 / S / SZ | | 1000 | 03- | DF323 | DF339 |

## DF 328 W

øext. 240 mm | øint. 118 | 4,0 | OE

| BRAND MARCA | MODEL MODELO | C.C. | YEAR | FRONT | REAR |
|---|---|---|---|---|---|
| SUZUKI | | | | | |
| XF 650 FREEWIND | | 650 | 97- | DF315 | DF328 |

## DF 330 W

øext. 260 mm | øint. 121 | 4,5 | OE

| BRAND MARCA | MODEL MODELO | C.C. | YEAR | FRONT | REAR |
|---|---|---|---|---|---|
| SUZUKI | | | | | |
| AN 650 BURGMAN | | 650 | 02-03 | DF330 | |
| CP SKY WAVE 650 | | 650 | 03-03 | DF330 | |

## DF 331 FLW

øext. 260 mm | øint. 121 | 4,5 | OE

| BRAND MARCA | MODEL MODELO | C.C. | YEAR | FRONT | REAR |
|---|---|---|---|---|---|
| SUZUKI | | | | | |
| AN 250 BURGMAN / SKY WAVE DER. | | 250 | 07-08 | DF331 | |
| AN 250 BURGMAN / SKY WAVE IZQ. | | 250 | 07-08 | DF331 | DF360 |
| AN 650 BURGMAN | | 650 | 04-12 | DF331 | DF363 |

## DF 332 W / DF 332 WS

øext. 290 mm | øint. 190 | 4,5 | OE
øext. 310 mm | øint. 190 | 4,5 | SP

| BRAND MARCA | MODEL MODELO | C.C. | YEAR | FRONT | REAR |
|---|---|---|---|---|---|
| SUZUKI MALASIA | | | | | |
| BELANG R 150 | | 150 | 11- | DF332 | |

## DF 334 CW

øext. 290 mm | øint. 121 | 5,0 / 0,0 | OE

| BRAND MARCA | MODEL MODELO | C.C. | YEAR | FRONT | REAR |
|---|---|---|---|---|---|
| SUZUKI | | | | | |
| SFV 650 GLADIUS LEFT/IZQ | | 650 | 09- | DF334 | |
| SFV 650 GLADIUS RIGHT/DER | | 650 | 09- | DF334 | DF352 |
| SFV 650 GLADIUS ABS LEFT/IZQ | | 650 | 10- | DF334 | |
| SFV 650 GLADIUS ABS RIGHT/DER | | 650 | 10- | DF334 | DF352 |
| SV 650 ABS DER. | | 650 | 07- | DF334 | |
| SV 650 ABS IZQ. | | 650 | 07- | DF334 | DF352 |

## DF 337 CW

øext. 290 mm | øint. 69 | 5,0 / 0,0 | OE

| BRAND MARCA | MODEL MODELO | C.C. | YEAR | FRONT | REAR |
|---|---|---|---|---|---|
| SUZUKI | | | | | |
| SFV 400 GLADIUS LEFT/IZQ | | 400 | 10- | DF337 | |
| SFV 400 GLADIUS RIGHT/DER | | 400 | 10- | DF337 | DF307 |
| GSX 600 F DER. (KATANA 600 USA) | | 600 | 04- | DF337 | |
| GSX 600 F IZQ. (KATANA 600 USA) | | 600 | 04- | DF337 | DF307 |
| GSF 650 BANDIT /S DER. | | 650 | 05-05 | DF337 | |
| GSF 650 BANDIT /S IZQ. | | 650 | 05-05 | DF337 | DF307 |
| SV 650 /S DER. | | 650 | 03-03 | DF337 | |
| SV 650 /S IZQ. | | 650 | 03-03 | DF337 | DF339 |
| SV 650 /S DER. | | 650 | 04-06 | DF337 | |
| SV 650 /S IZQ. | | 650 | 04-06 | DF337 | DF339 |
| GSX 750 F DER. | | 750 | 03- | DF337 | |
| GSX 750 F IZQ | | 750 | 03- | DF337 | DF307 |

## DF 339 W / DF 339 FLW

øext. 220 mm | øint. 89 | 5,0 | OE
øext. 220 mm | øint. 90 | 5,0

| BRAND MARCA | MODEL MODELO | C.C. | YEAR | FRONT | REAR |
|---|---|---|---|---|---|
| SUZUKI | | | | | |
| GSX R 600 SRAD | | 600 | 97-03 | DF320 | DF339 |
| GSX R 600 SRAD | | 600 | 04-05 | DF322 | DF339 |
| GSX R 600 | | 600 | 06-07 | DF348 | DF339 |
| GSX R 600 | | 600 | 08-10 | DF358 | DF339 |
| GSX R 600 | | 600 | 11- | DF358 | DF339 |
| SV 650 /S IZQ. | | 650 | 03-03 | DF337 | DF339 |
| SV 650 /S IZQ. | | 650 | 04-06 | DF337 | DF339 |
| GSX R 750 SRAD | | 750 | 96-99 | DF320 | DF339 |
| GSX R 750 SRAD | | 750 | 00-03 | DF320 | DF339 |
| GSX R 750 SRAD | | 750 | 04-05 | DF322 | DF339 |
| GSX R 750 | | 750 | 06-07 | DF348 | DF339 |
| GSX R 750 | | 750 | 08-10 | DF358 | DF339 |
| GSX R 750 | | 750 | 11- | DF358 | DF339 |
| GSX R 1000 | | 1000 | 01-02 | DF320 | DF339 |
| GSX R 1000 | | 1000 | 03-03 | DF322 | DF339 |
| GSX R 1000 | | 1000 | 04-04 | DF322 | DF339 |
| GSX R 1000 | | 1000 | 05-06 | DF348 | DF339 |
| GSX R 1000 | | 1000 | 07-08 | DF348 | DF339 |
| GSX R 1000 | | 1000 | 09-11 | DF358 | DF339 |
| GSX R 1000 | | 1000 | 12- | DF358 | DF339 |
| SV 1000 | | 1000 | 03- | DF323 | DF339 |
| SV 1000 / S / SZ | | 1000 | 03- | DF323 | DF339 |
| TL 1000 R | | 1000 | 98- | DF320 | DF339 |
| TL 1000 S | | 1000 | 97- | DF320 | DF339 |

## DF 341 W

øext. 260 mm | øint. 121 | 4,0 | OE

| BRAND MARCA | MODEL MODELO | C.C. | YEAR | FRONT | REAR |
|---|---|---|---|---|---|
| KAWASAKI | | | | | |
| EPSILON 250 | | 250 | 03- | DF341 | DF342 |
| SUZUKI | | | | | |
| AN 250 BURGMAN | | 250 | 98-02 | DF341 | DF342 |
| AN 400 BURGMAN | | 400 | 98-02 | DF341 | DF342 |



**OE:** Original equipment (original replacement disc) · **OE:** Equipo original (disco de remplazo del original) For other models years previous to 1990 visit **www.galferonline.es** · Para otros modelos anteriores al año 1990 visitar **www.galferonline.es**
For consult TÜV (ABE) type approvals visit **www.galfermoto.com --> DOWNLOAD --> TÜV CERTIFICATIONS** · Para consultar las homologaciones TÜV (ABE) visitar **www.galfermoto.com --> DESCARGAS --> CERTIFICACIONES TÜV**

## DF 342 W

øext. 210 mm øint. 109 | 5,0 | OE

| BRAND MARCA | MODEL MODELO | C.C. | YEAR | FRONT | REAR |
|---|---|---|---|---|---|
| **KAWASAKI** | | | | | |
| EPSILON 250 | | 250 | 03- | DF341 | DF342 |
| **SUZUKI** | | | | | |
| AN 250 BURGMAN | | 250 | 98-02 | DF341 | DF342 |
| AN 400 BURGMAN | | 400 | 98-02 | DF341 | DF342 |

## DF 344 W

øext. 260 mm øint. 121 | 4,5 | OE

| BRAND MARCA | MODEL MODELO | C.C. | YEAR | FRONT | REAR |
|---|---|---|---|---|---|
| **SUZUKI** | | | | | |
| AN 250 BURGMAN | | 250 | 03-06 | DF344 | DF345 |
| CJ 250 SKY WAVE / Type S | | 250 | 03- | DF344 | DF345 |
| AN 400 BURGMAN | | 400 | 03-05 | DF344 | DF345 |
| AN 400 BURGMAN IZQ./LEFT | | 400 | 06- | DF344 | |
| AN 400 BURGMAN DER./RIGHT | | 400 | 06- | DF344 | DF345 |
| AN 400 SKY WAVE IZQ./LEFT | | 400 | 07- | DF344 | |
| AN 400 SKY WAVE DER./RIGHT | | 400 | 07- | DF344 | DF345 |
| CK SKY WAVE 400 | | 400 | 03- | DF344 | DF345 |
| CP SKY WAVE 650 | | 650 | 04- | DF344 | |

## DF 346 W

øext. 260 mm øint. 105 | 5,0 | OE

| BRAND MARCA | MODEL MODELO | C.C. | YEAR | FRONT | REAR |
|---|---|---|---|---|---|
| **SUZUKI** | | | | | |
| GSX 1400 | | 1400 | 01- | DF320 | DF346 |

## DF 348 CW / DF 348 CRWi-D

DF 348 CW: øext. 310 mm øint. 100 | 5,0 / 0,0 | OE

DF 348 CRWi-D: øext. 310 mm øint. 100 | 5,0 / 0,0

| BRAND MARCA | MODEL MODELO | C.C. | YEAR | FRONT | REAR |
|---|---|---|---|---|---|
| **SUZUKI** | | | | | |
| GSX R 600 | | 600 | 06-07 | DF348 | DF339 |
| GSX R 750 | | 750 | 06-07 | DF348 | DF339 |
| GSX R 1000 | | 1000 | 05-06 | DF348 | DF339 |
| GSX R 1000 | | 1000 | 07-08 | DF348 | DF339 |
| M 109 R BOULEVARD | | 1800 | 06- | DF348 | DF359 |
| VZR 1800 INTRUDER | | 1800 | 08- | DF348 | DF359 |

## DF 351 CW / DF 351 CRWi-D

DF 351 CW: øext. 310 mm øint. 121 | 5,0 / 0,0 | OE

DF 351 CRWi-D: øext. 310 mm øint. 121 | 5,0 / 0,0

| BRAND MARCA | MODEL MODELO | C.C. | YEAR | FRONT | REAR |
|---|---|---|---|---|---|
| **SUZUKI** | | | | | |
| GSR 400 | | 400 | 06- | DF351 | DF352 |
| GSR 600 | | 600 | 06- | DF351 | DF352 |
| DL 650 V-STORM DER. | | 650 | 07- | DF351 | |
| DL 650 V-STORM IZQ. | | 650 | 07- | DF351 | DF361 |
| DL 650 V-STORM DER./ABS | | 650 | 07- | DF351 | |
| DL 650 V-STORM IZQ./ABS | | 650 | 07- | DF351 | DF361 |
| DL 650 V-STORM XPEDITION DER. | | 650 | 11- | DF351 | |
| DL 650 V-STORM XPEDITION IZQ. | | 650 | 11- | DF351 | DF361 |
| DL 650 V-STORM XPEDITION DER./ABS | | 650 | 11-12 | DF351 | |
| DL 650 V-STORM XPEDITION IZQ./ABS | | 650 | 11-12 | DF351 | DF361 |
| DL 650 V-STORM XPEDITION DER./ABS | | 650 | 13-13 | DF351 | |
| DL 650 V-STORM XPEDITION IZQ./ABS | | 650 | 13-13 | DF351 | DF361 |
| DL 650 V-STORM XT DER./ABS | | 650 | 15- | DF351 | |
| DL 650 V-STORM XT IZQ./ABS | | 650 | 15- | DF351 | DF361 |
| GSF 650 BANDIT /S/ ABS DER. | | 650 | 06- | DF351 | |
| GSF 650 BANDIT /S/ ABS IZQ. | | 650 | 06- | DF351 | DF352 |
| GSF 650 BANDIT /S/ | | 650 | 07- | DF351 | DF352 |
| GSF 650 BANDIT /S/ ABS | | 650 | 07- | DF351 | DF352 |
| GSX 650 F | | 650 | 08- | DF351 | DF352 |
| GSR 750 LEFT/IZQ | | 750 | 11- | DF351 | |
| GSR 750 RIGHT/DER | | 750 | 11- | DF351 | DF352 |
| GSR 750 ABS LEFT/IZQ | | 750 | 11- | DF351 | |
| GSR 750 ABS RIGHT/DER | | 750 | 11- | DF351 | DF352 |
| DL 1000 V-STORM ABS | | 1000 | 14- | DF351 | DF361 |
| GSF 1200 BANDIT / S | | 1200 | 06- | DF351 | DF352 |
| GSF 1200 BANDIT ABS | | 1200 | 06- | DF351 | DF352 |
| GSF 1250 BANDIT A/S/SA | | 1250 | 07-08 | DF351 | DF352 |
| GSF 1250 BANDIT FA | | 1250 | 09- | DF351 | DF352 |
| GSF 1250 BANDIT /SA | | 1250 | 10- | DF351 | DF352 |
| B-KING | | 1300 | 07- | DF351 | DF355 |
| GSX 1300 R HAYABUSA | | 1300 | 08-13 | DF351 | DF355 |
| GSX 1300 R HAYABUSA | | 1300 | 14- | DF351 | DF355 |

## DF 352 W

øext. 240 mm øint. 120 | 5,0 | OE

| BRAND MARCA | MODEL MODELO | C.C. | YEAR | FRONT | REAR |
|---|---|---|---|---|---|
| **SUZUKI** | | | | | |
| GW 250 INAZUMA F | | 250 | 15- | | DF352 |
| GW 250 INAZUMA Z | | 250 | 15- | | DF352 |
| GSR 400 | | 400 | 06- | DF351 | DF352 |
| GSR 600 | | 600 | 06- | DF351 | DF352 |
| GSF 650 BANDIT /S/ ABS IZQ. | | 650 | 06- | DF351 | DF352 |
| GSF 650 BANDIT /S/ | | 650 | 07- | DF351 | DF352 |
| GSF 650 BANDIT /S/ ABS | | 650 | 07- | DF351 | DF352 |
| GSX 650 F | | 650 | 08- | DF351 | DF352 |
| SFV 650 GLADIUS RIGHT/DER | | 650 | 09- | DF334 | DF352 |
| SFV 650 GLADIUS ABS RIGHT/DER | | 650 | 10- | DF334 | DF352 |
| SV 650 ABS IZQ. | | 650 | 07- | DF334 | DF352 |
| GSR 750 RIGHT/DER | | 750 | 11- | DF351 | DF352 |
| GSR 750 ABS RIGHT/DER | | 750 | 11- | DF351 | DF352 |
| GSF 1200 BANDIT / S | | 1200 | 06- | DF351 | DF352 |
| GSF 1200 BANDIT ABS | | 1200 | 06- | DF351 | DF352 |
| GSF 1250 BANDIT A/S/SA | | 1250 | 07-08 | DF351 | DF352 |
| GSF 1250 BANDIT FA | | 1250 | 09- | DF351 | DF352 |
| GSF 1250 BANDIT /SA | | 1250 | 10- | DF351 | DF352 |

## DF 355 W

øext. 260 mm øint. 140 | 5,0 | OE

| BRAND MARCA | MODEL MODELO | C.C. | YEAR | FRONT | REAR |
|---|---|---|---|---|---|
| **SUZUKI** | | | | | |
| B-KING | | 1300 | 07- | DF351 | DF355 |
| GSX 1300 R HAYABUSA | | 1300 | 08-13 | DF351 | DF355 |
| GSX 1300 R HAYABUSA | | 1300 | 14- | DF351 | DF355 |

## DF 358 CW / DF 358 CRWi-D

DF 358 CW: øext. 310 mm øint. 102 | 5,0 / 0,0 | OE

DF 358 CRWi-D: øext. 310 mm øint. 102 | 5,0 / 0,0

| BRAND MARCA | MODEL MODELO | C.C. | YEAR | FRONT | REAR |
|---|---|---|---|---|---|
| **SUZUKI** | | | | | |
| GSX R 600 | | 600 | 08-10 | DF358 | DF339 |
| GSX R 600 | | 600 | 11- | DF358 | DF339 |
| GSX R 750 | | 750 | 08-10 | DF358 | DF339 |
| GSX R 750 | | 750 | 11- | DF358 | DF339 |
| GSX-S 1000 ABS | | 1000 | 15- | DF358 | |
| GSX-S 1000 F ABS | | 1000 | 15- | DF358 | |
| GSX R 1000 | | 1000 | 09-11 | DF358 | DF339 |
| GSX R 1000 | | 1000 | 12- | DF358 | DF339 |

## DF 359 CW

øext. 275 mm øint. 89 | 5,6 / 6,65 | OE

| BRAND MARCA | MODEL MODELO | C.C. | YEAR | FRONT | REAR |
|---|---|---|---|---|---|
| **SUZUKI** | | | | | |
| M 109 R BOULEVARD | | 1800 | 06- | DF348 | DF359 |
| VZR 1800 INTRUDER | | 1800 | 08- | DF348 | DF359 |

## DF 360 W

øext. 210 mm øint. 89 | 5,0 | OE

| BRAND MARCA | MODEL MODELO | C.C. | YEAR | FRONT | REAR |
|---|---|---|---|---|---|
| **SUZUKI** | | | | | |
| AN 250 BURGMAN / SKY WAVE IZQ. | | 250 | 07-08 | DF331 | DF360 |

## DF 361 W

øext. 260 mm øint. 141 | 5,0 | OE

| BRAND MARCA | MODEL MODELO | C.C. | YEAR | FRONT | REAR |
|---|---|---|---|---|---|
| **KAWASAKI** | | | | | |
| KLV 1000 RIGHT/DER | | 1000 | 04- | DF323 | DF361 |
| **SUZUKI** | | | | | |
| DL 650 V-STORM IZQ. | | 650 | 04-06 | DF323 | DF361 |
| DL 650 V-STORM IZQ. | | 650 | 07- | DF351 | DF361 |
| DL 650 V-STORM IZQ./ABS | | 650 | 07- | DF351 | DF361 |
| DL 650 V-STORM XPEDITION IZQ. | | 650 | 11- | DF351 | DF361 |
| DL 650 V-STORM XPEDITION IZQ./ABS | | 650 | 11-12 | DF351 | DF361 |
| DL 650 V-STORM XPEDITION IZQ./ABS | | 650 | 13-13 | DF351 | DF361 |
| DL 650 V-STORM XT IZQ./ABS | | 650 | 15- | DF351 | DF361 |

| | | | | |
|---|---|---|---|---|
| DL 1000 V-STORM IZQ. | 1000 | 01-13 | DF323 | DF361 |
| DL 1000 V-STORM ABS | 1000 | 14- | DF351 | DF361 |

## DF 363 W
øext. 250 mm øint. 117 — 5,0 — OE

| BRAND MARCA | MODEL MODELO | C.C. | YEAR | FRONT | REAR |
|---|---|---|---|---|---|
| **SUZUKI** | | | | | |
| | AN 650 BURGMAN | 650 | 04-12 | DF331 | DF363 |

## DF 364 W
øext. 240 mm øint. 89 — 4,5 — OE

| BRAND MARCA | MODEL MODELO | C.C. | YEAR | FRONT | REAR |
|---|---|---|---|---|---|
| **SUZUKI** | | | | | |
| | UH 200 BURGMAN | 200 | 07-13 | DF364 | DF364 |
| | UH 200 BURGMAN | 200 | 14- | DF364 | DF364 |
| | UH 200 BURGMAN ABS | 200 | 14- | DF364 | DF364 |

## DF 365 W
øext. 220 mm øint. 89 — 4,5 — OE

| BRAND MARCA | MODEL MODELO | C.C. | YEAR | FRONT | REAR |
|---|---|---|---|---|---|
| **SUZUKI** | | | | | |
| | SIXTEEN | 150 | 08- | DF365 | DF365 |

## DF 448 CW
øext. 298 mm øint. 132 — 4,5 — 0,0 — OE

| BRAND MARCA | MODEL MODELO | C.C. | YEAR | FRONT | REAR |
|---|---|---|---|---|---|
| **YAMAHA** | | | | | |
| | XT 660 R | 660 | 04- | DF448 | DF458 |
| | XT 660 Z TENERE | 660 | 08- | DF448 | DF458 |

## DF 450 W
øext. 245 mm øint. 86 — 3,0 — OE

| BRAND MARCA | MODEL MODELO | C.C. | YEAR | FRONT | REAR |
|---|---|---|---|---|---|
| **YAMAHA** | | | | | |
| | XTZ 250 X | 250 | 07- | DF450 | |
| **YAMAHA BRASIL** | | | | | |
| | XTZ 250 LANDER | 250 | 07- | DF450 | |
| | XTZ 250 X | 250 | 07- | DF450 | |
| | XTZ 250 Z TENERE | 250 | 11- | DF450 | |

## DF 451 W
øext. 220 mm øint. 115 — 4,0 — OE

| BRAND MARCA | MODEL MODELO | C.C. | YEAR | FRONT | REAR |
|---|---|---|---|---|---|
| **YAMAHA** | | | | | |
| | SEROW 250 | 250 | 04- | DF451 | |
| | TT 600 S | 600 | 94- | DF452 | DF451 |

## DF 452 W
øext. 267 mm øint. 118 — 4,0 — OE

| BRAND MARCA | MODEL MODELO | C.C. | YEAR | FRONT | REAR |
|---|---|---|---|---|---|
| **YAMAHA** | | | | | |
| | TT 600 S | 600 | 94- | DF452 | DF451 |

## DF 453 W
øext. 267 mm øint. 132 — 4,0 — OE

| BRAND MARCA | MODEL MODELO | C.C. | YEAR | FRONT | REAR |
|---|---|---|---|---|---|
| **YAMAHA** | | | | | |
| | XT 600 E | 600 | 90-94 | DF453 | DF467 |

## DF 458 W
øext. 245 mm øint. 115 — 4,5 — OE

| BRAND MARCA | MODEL MODELO | C.C. | YEAR | FRONT | REAR |
|---|---|---|---|---|---|
| **CAGIVA** | | | | | |
| | CANYON | 900 | 97- | DF009 | DF458 |
| **ITALJET** | | | | | |
| | JUPITER | 250 | 02- | DF458 | DF490 |
| **LAVERDA** | | | | | |
| | GHOST | 650 | 96-97 | DF660 | DF458 |
| | SPORT | 650 | 95- | DF660 | DF458 |
| | 750 BLACK STRIKE | 750 | 98- | DF660 | DF458 |
| | 750 FORMULA | 750 | 98- | DF660 | DF458 |
| | 750 SUPER SPORT | 750 | 00- | DF660 | DF458 |
| **LINHAI** | | | | | |
| | MONARCH | 160 | 04- | DF458 | DF484 |
| | MAIN STR. 260 | 260 | 04- | DF458 | DF484 |
| **MBK MOTOBEKANE** | | | | | |
| | SKYLINER | 250 | 00- | DF458 | |
| **YAMAHA** | | | | | |
| | SP 250 MAGESTY | 250 | 96-97 | DF458 | - |
| | SP 250 DX MAGESTY | 250 | 98-99 | DF458 | DF490 |
| | SP 250 DX MAGESTY | 250 | 00- | DF458 | DF484 |
| | FZ 400 FAZER | 400 | 01- | DF472 | DF458 |
| | XJR 400 R | 400 | 93-96 | DF472 | DF458 |
| | XJR 400 R | 400 | 97-00 | DF472 | DF458 |
| | XJR 400 R | 400 | 01- | DF472 | DF458 |
| | FZS 600 FAZER | 600 | 98-99 | DF472 | DF458 |
| | FZS 600 S FAZER | 600 | 00-03 | DF472 | DF458 |
| | FZR 600 | 600 | 90-95 | DF472 | DF458 |
| | FZR 600 GENESIS | 600 | 91-95 | DF472 | DF458 |
| | SRX Classic by BIRD | 600 | 90- | DF471 | DF458 |
| | XJ 600 N / S | 600 | 95-97 | DF463 | DF458 |
| | XJ 600 N / S | 600 | 96-03 | DF474 | DF458 |
| | XJ 600 S DIVERSION | 600 | 91-97 | DF463 | DF458 |
| | XJ 600 S DIVERSION | 600 | 98-08 | DF488 | DF458 |
| | XJ 600 SECA II | 600 | 92-93 | DF463 | DF458 |
| | YZF 600 THUNDER CAT | 600 | 96-00 | DF474 | DF458 |
| | XT 660 R | 660 | 04- | DF448 | DF458 |
| | XT 660 X | 660 | 04- | | DF458 |
| | XT 660 Z TENERE | 660 | 08- | DF448 | DF458 |
| | YZF 750 R, SP | 750 | 93-95 | DF660 | DF458 |
| | YZF-R7/OW02 RACE | 750 | 99- | DF498 | DF458 |
| | YZF-R7/OW02 | 750 | 99- | | DF458 |
| | TDM 850 | 850 | 90-01 | DF472 | DF458 |
| | TRX 850 | 850 | 95- | DF472 | DF458 |
| | TDM 900 | 900 | 02-04 | DF474 | DF458 |
| | TDM 900 A | 900 | 05- | DF474 | DF458 |
| | YZF 1.000 THUNDER ACE | 1000 | 96-98 | DF474 | DF458 |
| | YZF 1.000 R-1 | 1000 | 98-01 | DF474 | DF458 |

## DF 459 W
øext. 282 mm øint. 132 — 5,0 — OE

| BRAND MARCA | MODEL MODELO | C.C. | YEAR | FRONT | REAR |
|---|---|---|---|---|---|
| **ROYAL ENFIELD** | | | | | |
| | BULLET CLASIC | 500 | 09- | DF459 | - |
| | CLUBMAN | 500 | 09- | DF459 | - |
| | EFI | 500 | 09- | DF459 | - |
| | EFI DE LUXE | 500 | 09- | DF459 | - |
| | KIT ES | 500 | 09- | DF459 | - |
| | TRAIL | 500 | 09- | DF459 | - |
| **YAMAHA** | | | | | |
| | XV 250 VIRAGO | 250 | 96-00 | DF459 | - |
| | XVS 250 DRAG STAR | 250 | 01- | DF459 | - |
| | GTS 1000 OMEGA | 1000 | 93- | | DF459 |
| | XVS 1100 DRAG STAR | 1100 | 99- | DF488 | DF459 |
| | V MAX 1200 VMX | 1200 | 93-94 | DF459 | DF459 |
| | V MAX 1200 VMX | 1200 | 95-02 | DF488 | DF459 |
| | V MAX 1200 XMS | 1200 | 03- | DF488 | DF459 |
| | XTZ 1200 SUPER TENERE | 1200 | 10- | DF520 | DF459 |
| | XTZ 1200 SUPER TENERE ABS | 1200 | 10- | DF520 | DF459 |
| | XTZ 1200 ZE SUPER TENERE ABS | 1200 | 14- | DF520 | DF459 |
| | FJR 1300 | 1300 | 01-02 | DF474 | DF459 |
| | FJR 1300 | 1300 | 03-05 | DF498 | DF459 |
| | VENTURE ROYALE 1300 | 1300 | 90- | DF459 | |

## DF 460 CW
øext. 298 mm øint. 132 — 4,5 — 0,0 — OE

| BRAND MARCA | MODEL MODELO | C.C. | YEAR | FRONT | REAR |
|---|---|---|---|---|---|
| **YAMAHA** | | | | | |
| | YZF - R25 | 250 | 15- | DF460 | DF461 |
| | YZF - R3 | 320 | 15- | DF460 | DF461 |

## DF 461 W
øext. 220 mm øint. 105 — 4,5 — OE

| BRAND MARCA | MODEL MODELO | C.C. | YEAR | FRONT | REAR |
|---|---|---|---|---|---|
| **YAMAHA** | | | | | |
| | YZF - R25 | 250 | 15- | DF460 | DF461 |
| | YZF - R3 | 320 | 15- | DF460 | DF461 |

## DF 463 W
øext. 320 mm øint. 198 — 5,0 — OE

| BRAND MARCA | MODEL MODELO | C.C. | YEAR | FRONT | REAR |
|---|---|---|---|---|---|
| **YAMAHA** | | | | | |
| | XJ 600 N / S | 600 | 95-97 | DF463 | DF458 |
| | XJ 600 S DIVERSION | 600 | 91-97 | DF463 | DF458 |
| | XJ 600 SECA II | 600 | 92-93 | DF463 | DF458 |
| | XZV 1.300 ROYAL STAR | 1300 | 96-98 | DF488 | DF463 |
| | XZV 1.300 TF ROYAL STAR VENTURE | 1300 | 99- | DF488 | DF463 |



**OE:** Original equipment (original replacement disc) · **OE:** Equipo original (disco de remplazo del original) For other models years previous to 1990 visit **www.galferonline.es** · Para otros modelos anteriores al año 1990 visitar **www.galferonline.es**
For consult TÜV (ABE) type approvals visit **www.galfermoto.com --> DOWNLOAD --> TÜV CERTIFICATIONS** · Para consultar las homologaciones TÜV (ABE) visitar **www.galfermoto.com --> DESCARGAS --> CERTIFICACIONES TÜV**

## DF 467 W

øext. 220 mm øint. 86 — 4,0 — OE

| BRAND MARCA | MODEL MODELO | C.C. | YEAR | FRONT | REAR |
|---|---|---|---|---|---|
| **YAMAHA** | | | | | |
| | TW 200 | 200 | 98- | DF467 | - |
| | XT 600 E | 600 | 90-94 | DF453 | DF467 |
| | XT 600 E | 600 | 95- | DF470 | DF467 |
| | XTZ 660 TENERE | 660 | 93-98 | DF470 | DF467 |
| **YAMAHA BRASIL** | | | | | |
| | TT R 230 | 230 | 08- | DF467 | - |

## DF 468 W

øext. 210 mm øint. 84 — 4,0 — OE

| BRAND MARCA | MODEL MODELO | C.C. | YEAR | FRONT | REAR |
|---|---|---|---|---|---|
| **YAMAHA** | | | | | |
| | FZR 400 RR | 400 | 90- | DF472 | DF468 |
| | SZR 660 | 660 | 95- | DF660 | DF468 |

## DF 469 W

øext. 245 mm øint. 132 — 5,0 — OE

| BRAND MARCA | MODEL MODELO | C.C. | YEAR | FRONT | REAR |
|---|---|---|---|---|---|
| **YAMAHA** | | | | | |
| | MT 07 | 700 | 14- | | DF469 |
| | MT 07 ABS | 700 | 14- | | DF469 |
| | MT 07 MOTOCAGE | 700 | 15- | | DF469 |
| | MT 07 MOTOCAGE ABS | 700 | 15- | | DF469 |
| | MT 09 | 850 | 13- | DF495 | DF469 |
| | MT 09 ABS | 850 | 13- | DF495 | DF469 |
| | MT 09 SPORTS TRACKER ABS | 850 | 14- | DF495 | DF469 |
| | MT 09 STREET RALLY | 850 | 14- | DF495 | DF469 |
| | MT 09 TRACER ABS | 850 | 15- | DF495 | DF469 |

## DF 470 W

øext. 282 mm øint. 132 — 4,0 — OE

| BRAND MARCA | MODEL MODELO | C.C. | YEAR | FRONT | REAR |
|---|---|---|---|---|---|
| **YAMAHA** | | | | | |
| | YBR 250 | 250 | 07- | DF470 | - |
| | YS 250 FAZER | 250 | 06-10 | DF470 | - |
| | YS 250 FAZER | 250 | 11- | DF470 | |
| | XT 600 E | 600 | 95- | DF470 | DF467 |
| | XTZ 660 TENERE | 660 | 93-98 | DF470 | DF467 |
| **YAMAHA BRASIL** | | | | | |
| | YS 250 FAZER | 250 | 06-09 | DF470 | - |
| | YS 250 FAZER | 250 | 10-10 | DF470 | - |
| | YS 250 FAZER | 250 | 11- | DF470 | |

## DF 471 W

øext. 267 mm øint. 132 — 5,0 — OE

| BRAND MARCA | MODEL MODELO | C.C. | YEAR | FRONT | REAR |
|---|---|---|---|---|---|
| **YAMAHA** | | | | | |
| | RD 350 R | 350 | 91- | DF471 | DF471 |
| | SRX Classic by BIRD | 600 | 90- | DF471 | DF458 |
| | XV 750 | 750 | 94-94 | DF471 | - |
| | XV 750 | 750 | 95- | DF471 | - |
| | XV 750 VIRAGO | 750 | 93- | DF471 | - |
| | XJ 900 S DIVERSION | 900 | 95- | | DF471 |
| | FZ 1 (USA) | 1000 | 98-05 | DF474 | DF471 |
| | FZR 1000 EXUP | 1000 | 93-95 | DF660 | DF471 |
| | FZS 1000 FAZER | 1000 | 98-05 | DF474 | DF471 |
| | BT 1100 BULL DOG | 1100 | 01- | DF474 | DF471 |
| | XV 1100 VIRAGO | 1100 | 93-94 | DF471 | - |
| | XV 1100 VIRAGO | 1100 | 95-98 | DF471 | - |
| | XJR 1200 | 1200 | 94-94 | DF660 | DF471 |
| | XJR 1200 (EUROPA) | 1200 | 95- | DF660 | DF471 |
| | XJR 1300 | 1300 | 99-00 | DF474 | DF471 |
| | XJR 1300 | 1300 | 01- | DF474 | DF471 |
| | XJR 1300 RACER | 1300 | 15- | DF474 | DF471 |
| | MT 01 | 1650 | 05-06 | DF498 | DF471 |
| | MT 01 | 1650 | 07- | DF519 | DF471 |

## DF 472 CW

øext. 298 mm øint. 64 — 5,0 / 10,5 — OE

| BRAND MARCA | MODEL MODELO | C.C. | YEAR | FRONT | REAR |
|---|---|---|---|---|---|
| **APRILIA** | | | | | |
| | RST FUTURA | 1000 | 01- | DF472 | |
| **CAGIVA** | | | | | |
| | V-RAPTOR | 650 | 01- | DF472 | |
| | RAPTOR | 1000 | 00- | DF472 | |
| | V-RAPTOR | 1000 | 00- | DF472 | |
| | X-TRA RAPTOR | 1000 | 02- | DF472 | |
| **MOTO GUZZI** | | | | | |
| | DAYTONA i.e | 1000 | 91-94 | DF472 | |
| **VICTORY** | | | | | |
| | CORY NESS CROOS COUNTRY | 1500 | 11- | DF472 | DF472 |
| | CROSS COUNTRY | 1500 | 10- | DF472 | DF472 |
| | CROSS ROADS | 1500 | 10- | DF472 | DF472 |
| | CRUISER | 1500 | 01- | DF472 | DF472 |
| | DE LUXE | 1500 | 01- | DF472 | DF472 |
| | GUNNER | 1700 | 15- | DF472 | DF472 |
| | HAMMER / S | 1500 | 01-07 | DF472 | DF472 |
| | HAMMER / S | 1500 | 08- | DF472 | DF472 |
| | HIGH BALL | 1700 | 15- | DF472 | DF472 |
| | JACKPOT | 1500 | 10- | DF472 | DF472 |
| | JUDGE | 1700 | 15- | DF472 | DF472 |
| | KING PIN | 1500 | 08- | DF472 | DF472 |
| | SPORTCRUISER | 1500 | 01- | DF472 | DF472 |
| | TOURING CRUISER | 1500 | 03- | DF472 | DF472 |
| | VEGAS | 1500 | 03-07 | DF472 | DF472 |
| | VEGAS | 1500 | 08- | DF472 | DF472 |
| | VISION 8 BALL | 1500 | 10- | DF472 | DF472 |
| | V92C | 1500 | 01- | DF472 | DF472 |
| **YAMAHA** | | | | | |
| | R1-Z | 250 | 90- | DF472 | |
| | TZ 250 | 250 | 90- | DF472 | |
| | FZ 400 FAZER | 400 | 01- | DF472 | DF458 |
| | FZR 400 RR | 400 | 90- | DF472 | DF468 |
| | XJR 400 R | 400 | 93-96 | DF472 | DF458 |
| | XJR 400 R | 400 | 97-00 | DF472 | DF458 |
| | XJR 400 R | 400 | 01- | DF472 | DF458 |
| | FZS 600 FAZER | 600 | 98-99 | DF472 | DF458 |
| | FZS 600 S FAZER | 600 | 00-03 | DF472 | DF458 |
| | FZR 600 | 600 | 90-95 | DF472 | DF458 |
| | FZR 600 GENESIS | 600 | 91-95 | DF472 | DF458 |
| | TDM 850 | 850 | 90-01 | DF472 | DF458 |
| | TRX 850 | 850 | 95- | DF472 | DF458 |

## DF 474 CW

øext. 298 mm øint. 132 — 5,0 / 0,0 — OE

| BRAND MARCA | MODEL MODELO | C.C. | YEAR | FRONT | REAR |
|---|---|---|---|---|---|
| **YAMAHA** | | | | | |
| | SR 400 | 400 | 14- | DF474 | - |
| | XJ 600 N / S | 600 | 96-03 | DF474 | DF458 |
| | YZF 600 THUNDER CAT | 600 | 96-00 | DF474 | DF458 |
| | YZF 600 R-6 | 600 | 99-02 | DF474 | DF491 |
| | TDM 900 | 900 | 02-04 | DF474 | DF458 |
| | TDM 900 A | 900 | 05- | DF474 | DF458 |
| | FZ 1 (USA) | 1000 | 98-05 | DF474 | DF471 |
| | FZS 1000 FAZER | 1000 | 98-05 | DF474 | DF471 |
| | YZF 1.000 THUNDER ACE | 1000 | 96-98 | DF474 | DF458 |
| | YZF 1.000 R-1 | 1000 | 98-01 | DF474 | DF458 |
| | YZF 1.000 R-1 | 1000 | 02-03 | DF474 | DF491 |
| | BT 1100 BULL DOG | 1100 | 01- | DF474 | DF471 |
| | FJR 1300 | 1300 | 01-02 | DF474 | DF459 |
| | XJR 1300 | 1300 | 99-00 | DF474 | DF471 |
| | XJR 1300 | 1300 | 01- | DF474 | DF471 |
| | XJR 1300 RACER | 1300 | 15- | DF474 | DF471 |
| | XVS MIDNIGHT STAR 1300 | 1300 | 07- | DF474 | |
| | XV 1900 STRATOLINER | 1900 | 06- | DF474 | |
| | XVS 1900 MIDNIGHT STAR | 1900 | 06-12 | DF474 | |

## DF 475 CW

øext. 320 mm øint. 132 — 5,0 / 0,0 — OE

## DF 475 CWR

øext. 320 mm øint. 132 — 4,5 / 0,0

| BRAND MARCA | MODEL MODELO | C.C. | YEAR | FRONT | REAR |
|---|---|---|---|---|---|
| **YAMAHA** | | | | | |
| | FZ 1 / FAZER | 1000 | 06- | DF475 | DF485 |
| | YZF 1.000 R-1 | 1000 | 04-05 | DF475 | DF496 |
| | YZF 1.000 R-1 | 1000 | 06-06 | DF475 | DF496 |
| | YZF - R1 | 1000 | 15- | DF475 | DF496 |
| | YZF - R1M | 1000 | 15- | DF475 | DF496 |

## DF 482 CW

øext. 310 mm øint. 132 — 5,0 / 0,0 — OE

## DF 482 CRWI-D

øext. 310 mm øint. 132 — 5,0 / 0,0

| BRAND MARCA | MODEL MODELO | C.C. | YEAR | FRONT | REAR |
|---|---|---|---|---|---|
| **YAMAHA** | | | | | |
| | YZF 600 R-6 | 600 | 05-05 | DF482 | DF496 |
| | YZF 600 R-6 | 600 | 06-07 | DF482 | DF496 |
| | YZF 600 R-6 | 600 | 08- | DF482 | DF496 |
| | YZF 600 R-46 | 600 | 05- | DF482 | DF496 |
| | FAZER 8 | 800 | 10- | DF482 | DF500 |
| | FZ 8 | 800 | 10- | DF482 | DF500 |

## DF 484 W

øext. 230 mm øint. 116 — 5,0 — OE

| BRAND MARCA | MODEL MODELO | C.C. | YEAR | FRONT | REAR |
|---|---|---|---|---|---|
| **LINHAI** | | | | | |
| MONARCH | | 160 | 04- | DF458 | DF484 |
| MAIN STR. 260 | | 260 | 04- | DF458 | DF484 |
| **YAMAHA** | | | | | |
| SP 250 DX MAGESTY | | 250 | 00- | DF458 | DF484 |

## DF 485 W

øext. 245 mm øint. 105 — 5,0 — OE

| BRAND MARCA | MODEL MODELO | C.C. | YEAR | FRONT | REAR |
|---|---|---|---|---|---|
| **YAMAHA** | | | | | |
| FZ 6 FAZER | | 600 | 04-06 | DF495 | DF485 |
| FZ 6 S FAZER | | 600 | 04-06 | DF495 | DF485 |
| FZ 6 /S FAZER ABS | | 600 | 06-06 | DF495 | DF485 |
| FZ 6 S2 | | 600 | 07- | DF495 | DF485 |
| FZ 6 FAZER S2 | | 600 | 07- | DF495 | DF485 |
| FZ 6 S2 ABS | | 600 | 07- | DF495 | DF485 |
| FZ 6 FAZER S2 ABS | | 600 | 07- | DF495 | DF485 |
| MT-03 | | 660 | 06- | DF495 | DF485 |
| FZ 1 / FAZER | | 1000 | 06- | DF475 | DF485 |

## DF 488 W

øext. 298 mm øint. 132 — 5,0 — OE

| BRAND MARCA | MODEL MODELO | C.C. | YEAR | FRONT | REAR |
|---|---|---|---|---|---|
| **YAMAHA** | | | | | |
| XV 535 S VIRAGO | | 535 | 95- | DF488 | - |
| XJ 600 S DIVERSION | | 600 | 98-08 | DF488 | DF458 |
| XVS 650 DRAG STAR | | 650 | 97- | DF488 | - |
| XVS 650 STAR CLASSIC | | 650 | 97- | DF488 | - |
| XVS 650 STAR SILVERADO | | 650 | 97- | DF488 | - |
| XVS 1100 DRAG STAR | | 1100 | 99- | DF488 | DF459 |
| V MAX 1200 VMX | | 1200 | 95-02 | DF488 | DF459 |
| V MAX 1200 XMS | | 1200 | 03- | DF488 | DF459 |
| XZV 1.300 ROYAL STAR | | 1300 | 96-98 | DF488 | DF463 |
| XZV 1.300 TF ROYAL STAR VENTURE | | 1300 | 99- | DF488 | DF463 |
| XV 1600 WILD STAR | | 1600 | 99- | DF488 | |
| XV 1700 ROAD STAR WARRIOR | | 1700 | 02-07 | DF488 | |
| XV 1700 ROAD STAR WARRIOR | | 1700 | 08- | DF488 | |

## DF 490 W

øext. 230 mm øint. 84 — 5,0 — OE

| BRAND MARCA | MODEL MODELO | C.C. | YEAR | FRONT | REAR |
|---|---|---|---|---|---|
| **ITALJET** | | | | | |
| JUPITER | | 250 | 02- | DF458 | DF490 |
| **YAMAHA** | | | | | |
| SP 250 DX MAGESTY | | 250 | 98-99 | DF458 | DF490 |

## DF 491 W

øext. 220 mm øint. 116 — 5,0 — OE

| BRAND MARCA | MODEL MODELO | C.C. | YEAR | FRONT | REAR |
|---|---|---|---|---|---|
| **YAMAHA** | | | | | |
| YZF 600 R-6 | | 600 | 99-02 | DF474 | DF491 |
| YZF 1.000 R-1 | | 1000 | 02-03 | DF474 | DF491 |

## DF 492 W

øext. 220 mm øint. 54 — 4,0 — OE

| BRAND MARCA | MODEL MODELO | C.C. | YEAR | FRONT | REAR |
|---|---|---|---|---|---|
| **MBK MOTOBEKANE** | | | | | |
| DOODO | | 150 | 01- | DF492 | - |
| SKYLINER | | 150 | 01- | DF492 | |
| SKYLINER | | 180 | 03- | DF492 | |
| **YAMAHA** | | | | | |
| SP 150 MAGESTY | | 150 | 01- | DF492 | |
| TEO´S 150 | | 150 | 01- | DF492 | - |
| SP 180 MAGESTY | | 180 | 03- | DF492 | |

## DF 493 W

øext. 282 mm øint. 132 — 4,0 — OE

| BRAND MARCA | MODEL MODELO | C.C. | YEAR | FRONT | REAR |
|---|---|---|---|---|---|
| **YAMAHA** | | | | | |
| XP 500 T-MAX | | 500 | 00-03 | DF493 | DF494 |

## DF 494 W

øext. 267 mm øint. 132 — 4,5 — OE

| BRAND MARCA | MODEL MODELO | C.C. | YEAR | FRONT | REAR |
|---|---|---|---|---|---|
| **YAMAHA** | | | | | |
| XP 500 T-MAX | | 500 | 00-03 | DF493 | DF494 |
| XP 500 T-MAX | | 500 | 04-07 | DF503 | DF494 |
| XP 500 T-MAX ABS | | 500 | 04-07 | DF503 | DF494 |
| XP 500 T-MAX | | 500 | 08- | DF525 | DF494 |
| XP 500 T-MAX ABS | | 500 | 08- | DF525 | DF494 |
| XP 500 T-MAX BLACK MAX | | 500 | 06-07 | DF503 | DF494 |
| XP 500 T-MAX CUP | | 500 | 03- | DF498 | DF494 |

## DF 495 CW / DF 495 CRWi-D

CW: øext. 298 mm øint. 132 — 5,0 / 0,0 — OE
CRWi-D: øext. 298 mm øint. 132 — 5,0 / 0,0

| BRAND MARCA | MODEL MODELO | C.C. | YEAR | FRONT | REAR |
|---|---|---|---|---|---|
| **YAMAHA** | | | | | |
| FZ 6 FAZER | | 600 | 04-06 | DF495 | DF485 |
| FZ 6 S FAZER | | 600 | 04-06 | DF495 | DF485 |
| FZ 6 /S FAZER ABS | | 600 | 06-06 | DF495 | DF485 |
| FZ 6 S2 | | 600 | 07- | DF495 | DF485 |
| FZ 6 FAZER S2 | | 600 | 07- | DF495 | DF485 |
| FZ 6 S2 ABS | | 600 | 07- | DF495 | DF485 |
| FZ 6 FAZER S2 ABS | | 600 | 07- | DF495 | DF485 |
| XJ 6 S DIVERSION (FZ 6 R USA) | | 600 | 09- | DF495 | DF511 |
| XJ 6 S DIVERSION ABS | | 600 | 09- | DF495 | DF511 |
| XJ 6 S DIVERSION F | | 600 | 10- | DF495 | DF511 |
| XJ 6 S DIVERSION NAKED | | 600 | 09- | DF495 | DF511 |
| YZF 600 R-6 | | 600 | 03-04 | DF495 | DF496 |
| MT-03 | | 660 | 06- | DF495 | DF485 |
| MT 09 | | 850 | 13- | DF495 | DF469 |
| MT 09 ABS | | 850 | 13- | DF495 | DF469 |
| MT 09 SPORTS TRACKER ABS | | 850 | 14- | DF495 | DF469 |
| MT 09 STREET RALLY | | 850 | 14- | DF495 | DF469 |
| MT 09 TRACER ABS | | 850 | 15- | DF495 | DF469 |
| XV STAR RAIDER | | 1900 | 08- | DF495 | |

## DF 496 W

øext. 220 mm øint. 105 — 4,5 — OE

| BRAND MARCA | MODEL MODELO | C.C. | YEAR | FRONT | REAR |
|---|---|---|---|---|---|
| **YAMAHA** | | | | | |
| YZF 600 R-6 | | 600 | 03-04 | DF495 | DF496 |
| YZF 600 R-6 | | 600 | 05-05 | DF482 | DF496 |
| YZF 600 R-6 | | 600 | 06-07 | DF482 | DF496 |
| YZF 600 R-6 | | 600 | 08- | DF482 | DF496 |
| YZF 600 R-46 | | 600 | 05- | DF482 | DF496 |
| YZF 1.000 R-1 | | 1000 | 04-05 | DF475 | DF496 |
| YZF 1.000 R-1 | | 1000 | 06-06 | DF475 | DF496 |
| YZF 1.000 R-1 | | 1000 | 07-08 | DF520 | DF496 |
| YZF 1.000 R-1 | | 1000 | 09-11 | DF520 | DF496 |
| YZF 1.000 R-1 TCS | | 1000 | 12-14 | DF520 | DF496 |
| YZF - R1 | | 1000 | 15- | DF475 | DF496 |
| YZF - R1M | | 1000 | 15- | DF475 | DF496 |

## DF 498 CW / DF 498 CRWi-D

CW: øext. 320 mm øint. 132 — 5,0 / 0,0 — OE
CRWi-D: øext. 320 mm øint. 132 — 5,0 / 0,0

| BRAND MARCA | MODEL MODELO | C.C. | YEAR | FRONT | REAR |
|---|---|---|---|---|---|
| **YAMAHA** | | | | | |
| XP 500 T-MAX CUP | | 500 | 03- | DF498 | DF494 |
| YZF-R7 /OW02 RACE | | 750 | 99- | DF498 | DF458 |
| FJR 1300 | | 1300 | 03-05 | DF498 | DF459 |
| MT 01 | | 1650 | 05-06 | DF498 | DF471 |

## DF 500 W

øext. 267 mm øint. 132 — 5,0 — OE

| BRAND MARCA | MODEL MODELO | C.C. | YEAR | FRONT | REAR |
|---|---|---|---|---|---|
| **MBK MOTOBEKANE** | | | | | |
| SKYLINER | | 400 | 04- | DF500 | DF501 |
| **YAMAHA** | | | | | |
| X - MAX 250 | | 250 | 05-09 | DF500 | DF524 |
| X - MAX 250 | | 250 | 10- | DF500 | DF524 |
| SP 400 MAGESTY | | 400 | 04-04 | DF500 | DF501 |
| SP 400 MAGESTY | | 400 | 05- | DF500 | DF501 |
| SP 400 GRAND MAJESTY (JAP) | | 400 | 05- | DF500 | DF501 |
| FAZER 8 | | 800 | 10- | DF482 | DF500 |
| FZ 8 | | 800 | 10- | DF482 | DF500 |



**OE:** Original equipment (original replacement disc) - **OE:** Equipo original (disco de remplazo del original) For other models years previous to 1990 visit **www.galferonline.es** - Para otros modelos anteriores al año 1990 visitar **www.galferonline.es**
For consult TÜV (ABE) type approvals visit **www.galfermoto.com --> DOWNLOAD --> TÜV CERTIFICATIONS** - Para consultar las homologaciones TÜV (ABE) visitar **www.galfermoto.com --> DESCARGAS --> CERTIFICACIONES TÜV**

## DF 501 W

øext. 267 mm øint. 132 | 5,0 | OE

| BRAND MARCA | MODEL MODELO | C.C. | YEAR | FRONT | REAR |
|---|---|---|---|---|---|
| **MBK MOTOBEKANE** | | | | | |
| | SKYLINER | 400 | 04- | DF500 | DF501 |
| **YAMAHA** | | | | | |
| | SP 400 MAGESTY | 400 | 04-04 | DF500 | DF501 |
| | SP 400 MAGESTY | 400 | 05- | DF500 | DF501 |
| | SP 400 GRAND MAJESTY (JAP) | 400 | 05- | DF500 | DF501 |
| | X - MAX 400 | 400 | 13- | DF503 | DF501 |

## DF 503 FLW

øext. 267 mm øint. 132 | 4,0 | OE

| BRAND MARCA | MODEL MODELO | C.C. | YEAR | FRONT | REAR |
|---|---|---|---|---|---|
| **YAMAHA** | | | | | |
| | X - MAX 400 | 400 | 13- | DF503 | DF501 |
| | XP 500 T-MAX | 500 | 04-07 | DF503 | DF494 |
| | XP 500 T-MAX ABS | 500 | 04-07 | DF503 | DF494 |
| | XP 500 T-MAX BLACK MAX | 500 | 06-07 | DF503 | DF494 |
| | XP 530 T-MAX | 530 | 12- | DF503 | DF528 |
| | XP 530 T-MAX ABS | 530 | 12- | DF503 | DF528 |

## DF 511 W

øext. 245 mm øint. 115 | 5,0 | OE

| BRAND MARCA | MODEL MODELO | C.C. | YEAR | FRONT | REAR |
|---|---|---|---|---|---|
| **YAMAHA** | | | | | |
| | XJ 6 S DIVERSION (FZ 6 R USA) | 600 | 09- | DF495 | DF511 |
| | XJ 6 S DIVERSION ABS | 600 | 09- | DF495 | DF511 |
| | XJ 6 S DIVERSION F | 600 | 10- | DF495 | DF511 |
| | XJ 6 S DIVERSION NAKED | 600 | 09- | DF495 | DF511 |

## DF 512 CW

øext. 267 mm øint. 58 | 4,0 | OE

## DF 512 WS

øext. 300 mm øint. 59 | 4,0 | SP

| BRAND MARCA | MODEL MODELO | C.C. | YEAR | FRONT | REAR |
|---|---|---|---|---|---|
| **YAMAHA** | | | | | |
| | CRYPTON-X T 135 | 135 | 08-14 | DF512 | - |

## DF 519 CWi-D

øext. 310 mm øint. 132 | 5,0 / 0,0 | OE

| BRAND MARCA | MODEL MODELO | C.C. | YEAR | FRONT | REAR |
|---|---|---|---|---|---|
| **YAMAHA** | | | | | |
| | MT 01 | 1650 | 07- | DF519 | DF471 |

## DF 520 CWi-D

øext. 310 mm øint. 132 | 5,0 / 0,0 | OE

## DF 520 CRWi-D

øext. 310 mm øint. 132 | 5,0 / 0,0

| BRAND MARCA | MODEL MODELO | C.C. | YEAR | FRONT | REAR |
|---|---|---|---|---|---|
| **YAMAHA** | | | | | |
| | YZF 1.000 R-1 | 1000 | 07-08 | DF520 | DF496 |
| | YZF 1.000 R-1 | 1000 | 09-11 | DF520 | DF496 |
| | YZF 1.000 R-1 TCS | 1000 | 12-14 | DF520 | DF496 |
| | XTZ 1200 SUPER TENERE | 1200 | 10- | DF520 | DF459 |
| | XTZ 1200 SUPER TENERE ABS | 1200 | 10- | DF520 | DF459 |
| | XTZ 1200 ZE SUPER TENERE ABS | 1200 | 14- | DF520 | DF459 |

## DF 524 W

øext. 240 mm øint. 92 | 5,0 | OE

| BRAND MARCA | MODEL MODELO | C.C. | YEAR | FRONT | REAR |
|---|---|---|---|---|---|
| **YAMAHA** | | | | | |
| | X - CITY | 250 | 07- | | DF524 |
| | X - MAX 250 | 250 | 05-09 | DF500 | DF524 |
| | X - MAX 250 | 250 | 10- | DF500 | DF524 |

## DF 525 FLW

øext. 267 mm øint. 132 | 4,0 | OE

| BRAND MARCA | MODEL MODELO | C.C. | YEAR | FRONT | REAR |
|---|---|---|---|---|---|
| **YAMAHA** | | | | | |
| | XP 500 T-MAX | 500 | 08- | DF525 | DF494 |
| | XP 500 T-MAX ABS | 500 | 08- | DF525 | DF494 |

## DF 528 W

øext. 282 mm øint. 131,5 | 5,0 | OE

| BRAND MARCA | MODEL MODELO | C.C. | YEAR | FRONT | REAR |
|---|---|---|---|---|---|
| **YAMAHA** | | | | | |
| | XP 530 T-MAX | 530 | 12- | DF503 | DF528 |
| | XP 530 T-MAX ABS | 530 | 12- | DF503 | DF528 |

## DF 607 W

øext. 220 mm øint. 110 | 4,0 | OE

## DF 607 WLL

øext. 220 mm øint. 110 | 4,0

## DF 607 WS

øext. 240 mm øint. 110 | 4,0 | SP

## DF 607 RW

øext. 220 mm øint. 110 | 4,0

## DF 607 RWS

øext. 240 mm øint. 110 | 4,0 | SP

| BRAND MARCA | MODEL MODELO | C.C. | YEAR | FRONT | REAR |
|---|---|---|---|---|---|
| **CCM** | | | | | |
| | 450 ADVENTURE | 450 | 15- | | DF607 |
| **HUSABERG** | | | | | |
| | 570 FS | 570 | 10- | | DF607 |
| | 650 FS | 650 | 03-03 | | DF607 |
| **KTM** | | | | | |
| | 560 SMR | 560 | 07- | DF672 | DF607 |
| | 620 DUKE | 620 | 95-02 | | DF607 |
| | 625 SMC | 625 | 06- | | DF607 |
| | 640 LC4 ADVENTURE R | 640 | 99-05 | DF672 | DF607 |
| | 640 LC4 ADVENTURE R | 640 | 06- | DF672 | DF607 |
| | 640 LC4 SUPERMOTARD | 640 | 02-04 | | DF607 |
| | 640 LC4 SUPERMOTARD (DF606SM) | 640 | 05- | DF606 | DF607 |

## DF 612 W

øext. 220 mm øint. 60 | 4,0 | OE

| BRAND MARCA | MODEL MODELO | C.C. | YEAR | FRONT | REAR |
|---|---|---|---|---|---|
| **APRILIA** | | | | | |
| | LEONARDO 150 4T | 150 | 98-98 | DF612 | DF629 |
| | LEONARDO 150 4T | 150 | 99- | DF612 | DF629 |
| | SCARABEO 150 4T | 150 | 98- | DF671 | DF612 |
| | SCARABEO 200 / GT | 200 | 02-06 | DF671 | DF612 |
| | SPORT CITY 200 | 200 | 04- | DF671 | DF612 |
| | LEONARDO 250 4T | 250 | 99- | DF612 | |
| | SCARABEO 250 | 250 | 04-04 | DF671 | DF612 |
| | SPORT CITY 250 | 250 | 06- | DF671 | DF612 |
| | LEONARDO 300 | 300 | 04- | DF612 | |
| | SPORT CITY CUBE 300 | 300 | 08- | DF671 | DF612 |
| | ARRECIFE 500 | 500 | 02- | DF671 | DF612 |
| | ARRECIFE 500 SPRINT | 500 | 05- | DF671 | DF612 |
| | ATLANTIC 500 | 500 | 02- | DF671 | DF612 |
| | ATLANTIC 500 SPRINT | 500 | 05- | DF671 | DF612 |
| | SCARABEO 500 ABS++ | 500 | 03- | DF671 | DF612 |
| **DERBI** | | | | | |
| | RAMBLA 250 ie | 250 | 08- | DF671 | DF612 |
| | RAMBLA 300 ie | 300 | 10- | DF671 | DF612 |

## DF 621 W

øext. 240 mm øint. 90 | 4,0 | OE

| BRAND MARCA | MODEL MODELO | C.C. | YEAR | FRONT | REAR |
|---|---|---|---|---|---|
| **MALAGUTI** | | | | | |
| | MADISON 250 | 250 | 99-05 | DF621 | DF622 |

| | | | | |
|---|---|---|---|---|
| PASSWORD 250 | 250 | 05-06 | | DF621 |
| MADISON 400 | 400 | 01-05 | DF621 | DF621 |
| MADISON K 400 | 400 | 06- | | DF621 |

**DF 622 W** — øext. 220 mm / øint. 90 — 4,0 — OE

| BRAND MARCA | MODEL MODELO | C.C. | YEAR | FRONT | REAR |
|---|---|---|---|---|---|
| **MALAGUTI** | | | | | |
| MADISON 150 | | 150 | 00- | DF622 | DF622 |
| MADISON 180 | | 180 | 02- | DF622 | DF622 |
| MADISON 200 | | 200 | 04- | DF622 | DF622 |
| PHANTOM MAX 200 | | 200 | 04- | DF622 | DF622 |
| MADISON 250 | | 250 | 99-05 | DF621 | DF622 |
| MADISON RS 250 | | 250 | 06-06 | | DF622 |
| PHANTOM MAX 250 | | 250 | 05- | DF622 | DF622 |

**DF 624 W** — øext. 174 mm / øint. 38 — 3,0 — OE

| BRAND MARCA | MODEL MODELO | C.C. | YEAR | FRONT | REAR |
|---|---|---|---|---|---|
| **ITALJET** | | | | | |
| DRAGSTER | | 180 | 00- | DF624 | DF625 |

**DF 625 W** — øext. 174 mm / øint. 66 — 3,5 — OE

| BRAND MARCA | MODEL MODELO | C.C. | YEAR | FRONT | REAR |
|---|---|---|---|---|---|
| **ITALJET** | | | | | |
| DRAGSTER | | 180 | 00- | DF624 | DF625 |

**DF 629 W** — øext. 190 mm / øint. 58 — 3,6 — OE

**DF 629 RW** — øext. 190 mm / øint. 58 — 3,6

**DF 629 FLS** — øext. 220 mm / øint. 58 — 3,0 — SP009

| BRAND MARCA | MODEL MODELO | C.C. | YEAR | FRONT | REAR |
|---|---|---|---|---|---|
| **APRILIA** | | | | | |
| LEONARDO 150 4T | | 150 | 98-98 | DF612 | DF629 |
| LEONARDO 150 4T | | 150 | 99- | DF612 | DF629 |
| SR 150 | | 150 | 00- | DF629 | - |

**DF 630 W** — øext. 220 mm / øint. 108 — 4,0 — OE

| BRAND MARCA | MODEL MODELO | C.C. | YEAR | FRONT | REAR |
|---|---|---|---|---|---|
| **DUCATI** | | | | | |
| 748 DESMO QUATTRO | | 748 | 94-97 | DF660 | DF630 |
| 748 | | 748 | 98-99 | DF660 | DF630 |
| 748 E/S | | 748 | 00-02 | DF660 | DF630 |
| 748 R | | 748 | 01-02 | DF660 | DF630 |
| 916 STRADA | | 916 | 94-98 | DF660 | DF630 |
| 916 SENNA | | 916 | 94-97 | DF660 | DF630 |
| 916 SPS | | 916 | 98-98 | DF660 | DF630 |
| 996 S | | 996 | 99-01 | DF660 | DF630 |
| 996 R | | 996 | 99-01 | DF660 | DF630 |
| 998 | | 998 | 02- | DF881 | DF630 |
| 998 R | | 998 | 02- | DF660 | DF630 |
| 998 S | | 998 | 02- | DF883 | DF630 |

**DF 631 CW** — øext. 305 mm / øint. 118 — 5,0 / 0,0 — OE

| BRAND MARCA | MODEL MODELO | C.C. | YEAR | FRONT | REAR |
|---|---|---|---|---|---|
| **BMW** | | | | | |
| R 850 R ROADSTER | | 850 | 95-00 | DF631 | DF701 |
| R 850 R ROADSTER | | 850 | 01- | DF631 | DF701 |
| R 100 GS, R | | 1000 | 93-94 | DF631 | DF662 |
| K 1100 RS ABS | | 1100 | 93- | DF631 | DF662 |
| K 1100 LT SPECIAL EDITION | | 1100 | 95- | DF631 | DF662 |
| K 1100 LT (ABS) | | 1100 | 93-94 | DF631 | DF662 |
| R 1100 LT | | 1100 | 95- | DF631 | DF662 |
| R 1100 R ROADSTER | | 1100 | 95- | DF631 | DF701 |
| R 1100 RS | | 1100 | 93-94 | DF631 | DF662 |
| R 1100 RS NO ABS | | 1100 | 95- | DF631 | DF701 |
| R 1100 RT ABS | | 1100 | 94-01 | DF631 | DF701 |
| R 1100 RT NO ABS | | 1100 | 94-01 | DF631 | DF701 |

**DF 632 W** — øext. 220 mm / øint. 110 — 4,0 — OE

| BRAND MARCA | MODEL MODELO | C.C. | YEAR | FRONT | REAR |
|---|---|---|---|---|---|
| **APRILIA** | | | | | |
| PEGASO 600 4 VALVOLE | | 600 | 91- | DF663 | DF632 |
| PEGASO 600 AE | | 600 | 91- | DF663 | DF632 |
| MOTO 6.5 | | 650 | 95- | | DF632 |
| PEGASO 650 | | 650 | 91-93 | DF663 | DF632 |
| PEGASO 650 | | 650 | 94-97 | DF663 | DF632 |
| PEGASO 650 | | 650 | 98-00 | DF663 | DF632 |
| **BENELLI** | | | | | |
| 570 SUPERMOTO | | 570 | 08- | DF886 | DF632 |

**DF 636 W** — øext. 245 mm / øint. 115 — 4,5 — OE

| BRAND MARCA | MODEL MODELO | C.C. | YEAR | FRONT | REAR |
|---|---|---|---|---|---|
| **DUCATI** | | | | | |
| 350 SPORT | | 350 | 91- | DF660 | DF636 |
| 400 MONSTER (JAPON) | | 400 | 04- | DF660 | DF636 |
| 400 SS | | 400 | 93- | DF660 | DF636 |
| 600 M MONSTER | | 600 | 94-00 | DF660 | DF636 |
| 600 SS | | 600 | 93- | DF660 | DF636 |
| MONSTER 620 S i.e | | 620 | 01-04 | DF660 | DF636 |
| MONSTER 620 / DARK | | 620 | 05- | DF870 | DF636 |
| MULTISTRADA MTS 620 | | 620 | 05- | DF870 | DF636 |
| MULTISTRADA MTS 620 DARK | | 620 | 05- | DF660 | DF636 |
| 620 SS | | 620 | 03- | DF660 | DF636 |
| MONSTER 695 | | 695 | 06- | DF870 | DF636 |
| MONSTER 696 | | 695 | 08- | DF660 | DF636 |
| 750 M MONSTER | | 750 | 96- | DF660 | DF636 |
| 750 SPORT | | 750 | 01- | DF660 | DF636 |
| 750 SS | | 750 | 91-97 | DF660 | DF636 |
| 750 SS | | 750 | 98- | DF660 | DF636 |
| MONSTER 800 S i.e | | 800 | 03-04 | DF660 | DF636 |
| 800 SS | | 800 | 03- | DF660 | DF636 |
| 800 SPORT | | 800 | 03- | DF660 | DF636 |
| 851 SPORT PRODUCTION | | 851 | 90-91 | DF660 | DF636 |
| 888 DESMO QUATTRO | | 888 | 93-93 | | DF636 |
| 888 SPS | | 888 | 92-92 | | DF636 |
| 900 M MONSTER | | 900 | 93-00 | DF660 | DF636 |
| 900 SS | | 900 | 91-97 | DF660 | DF636 |
| 900 SS | | 900 | 98- | DF660 | DF636 |
| MONSTER S4 | | 916 | 01-02 | DF660 | DF636 |
| ST 4 | | 916 | 99- | DF660 | DF636 |
| ST 2 944 | | 944 | 97-98 | DF660 | DF636 |
| ST 3 / s ABS | | 992 | 06- | DF660 | DF636 |
| 1000 MONSTER S i.e. | | 1000 | 03-05 | DF660 | DF636 |
| GT 1000 | | 1000 | 05- | DF660 | DF636 |
| PAUL SMART 1000 | | 1000 | 05- | DF660 | DF636 |
| SPORT 1000 | | 1000 | 05- | DF660 | DF636 |
| SPORT 1000 S | | 1000 | 07- | DF660 | DF636 |
| SS 1000 DS | | 1000 | 03- | DF660 | DF636 |

**DF 645 CW** — øext. 320 mm / øint. 120 — 5,0 / 9,0 — OE

| BRAND MARCA | MODEL MODELO | C.C. | YEAR | FRONT | REAR |
|---|---|---|---|---|---|
| **HUSQVARNA** | | | | | |
| 510 SM R | | 510 | 05-05 | DF645 | DF885 |
| 510 SM R | | 510 | 06- | DF645 | DF885 |
| 530 RR | | 530 | 09- | DF645 | |
| 570 SM S | | 570 | 01- | DF645 | DF885 |
| 570 SM R | | 570 | 01- | DF645 | DF885 |
| NOX | | 600 | 01- | DF645 | DF885 |
| 610LT | | 610 | 00- | DF645 | DF885 |
| 610 SM S | | 610 | 00-04 | DF645 | DF885 |
| 610 SM R | | 610 | 00-04 | DF645 | DF885 |
| 610 SM R | | 610 | 05-05 | DF645 | DF885 |
| 610 SM R | | 610 | 06- | DF645 | DF885 |
| 610 SM ie | | 610 | 07- | DF645 | DF885 |
| 630 SMR | | 630 | 06- | DF645 | DF885 |
| STR 650 CRC | | 650 | 07- | DF645 | DF885 |

**DF 648 W** — øext. 190 mm / øint. 68 — 4,0 — OE

**DF 648 RW** — øext. 190 mm / øint. 68 — 4,0

| BRAND MARCA | MODEL MODELO | C.C. | YEAR | FRONT | REAR |
|---|---|---|---|---|---|
| **APRILIA** | | | | | |
| ARRECIFE 200 | | 200 | 03- | | DF648 |
| ATLANTIC 200 | | 200 | 03- | | DF648 |
| ARRECIFE 250 SPRINT | | 250 | 06- | | DF648 |
| ATLANTIC 250 SPRINT | | 250 | 06- | | DF648 |

**DF 649 W** — øext. 190 mm / øint. 58 — 3,7 — OE

| BRAND MARCA | MODEL MODELO | C.C. | YEAR | FRONT | REAR |
|---|---|---|---|---|---|
| **BENELLI** | | | | | |
| VELVET 150 | | 150 | 98- | DF669 | DF649 |
| VELVET 250 | | 250 | 99- | DF669 | DF649 |
| VELVET DUSK 400 | | 400 | 03- | | DF649 |
| **MALAGUTI** | | | | | |



**OE:** Original equipment (original replacement disc) · **OE:** Equipo original (disco de remplazo del original) For other models years previous to 1990 visit **www.galferonline.es** · Para otros modelos anteriores al año 1990 visitar **www.galferonline.es**
For consult TÜV (ABE) type approvals visit **www.galfermoto.com --> DOWNALOAD --> TÜV CERTIFICATIONS** · Para consultar las homologaciones TÜV (ABE) visitar **www.galfermoto.com --> DESCARGAS --> CERTIFICACIONES TÜV**

| | | | | |
|---|---|---|---|---|
| F 18 WARRIOR | 150 | 00-03 | | DF649 |
| **PEUGEOT** | | | | |
| LOOXOR | 150 | 02- | | DF649 |

**DF 650 W** — øext. 200 mm, øint. 97 — 4,0 — OE

**DF 650 RW** — øext. 200 mm, øint. 97 — 4,0

| BRAND MARCA | MODEL MODELO | C.C. | YEAR | FRONT | REAR |
|---|---|---|---|---|---|
| **LML** | | | | | |
| STAR 2T (TODAS) | | 150 | 10- | DF650 | - |
| STAR GT 2T | | 150 | 10- | DF650 | - |
| STAR 4T (TODAS) | | 151 | 10- | DF650 | - |
| STAR GT 4T | | 151 | 10- | DF650 | - |
| STAR RS 4T | | 151 | 10- | DF650 | - |
| STAR MAT SERIES 4T | | 151 | 10- | DF650 | - |
| STAR BICOLOR VINTAGE 4T | | 151 | 10- | DF650 | - |
| STAR CORSA 4T | | 165 | 10- | DF650 | - |
| STAR 4T (TODAS) | | 200 | 12- | DF650 | - |
| STAR ART (TODAS) | | 200 | 12- | DF650 | - |
| STAR GT (TODAS) | | 200 | 12- | DF650 | - |
| STAR URBAN (TODAS) | | 200 | 12- | DF650 | - |
| STAR RS/SPORT | | 200 | 12- | DF650 | - |
| STAR OFF ROAD | | 200 | 12- | DF650 | - |
| **PIAGGIO** | | | | | |
| HEXAGON GTX 150 (G) | | 150 | 00- | DF650 | DF650 |
| HEXAGON GTX 150 (H) | | 150 | 00- | DF650 | DF650 |
| SKIPPER | | 150 | 93-97 | DF650 | - |
| VESPA ET4 | | 150 | 01- | DF650 | - |
| VESPA S 150 | | 150 | 09- | DF650 | - |
| HEXAGON GTX 180 (G) | | 180 | 00-00 | DF650 | DF650 |
| HEXAGON GTX 180 (H) | | 180 | 00-00 | DF650 | DF650 |
| HEXAGON LXT 180 (G) | | 180 | 98-99 | DF650 | - |
| HEXAGON LXT 180 (H) | | 180 | 98-99 | DF650 | - |
| HEXAGON GT 250 4-T (G) | | 250 | 98-99 | DF650 | - |
| HEXAGON GT 250 4-T (H) | | 250 | 98-99 | DF650 | - |
| HEXAGON GTX 250 (G) | | 250 | 00- | DF650 | DF650 |
| HEXAGON GTX 250 (H) | | 250 | 00- | DF650 | DF650 |

**DF 651 CW** — øext. 310 mm, øint. 118 — 5,0 — 12,5 — OE

| BRAND MARCA | MODEL MODELO | C.C. | YEAR | FRONT | REAR |
|---|---|---|---|---|---|
| **TRIUMPH** | | | | | |
| DAYTONA 750 SPORT | | 750 | 91- | DF651 | DF875 |
| DAYTONA 900 | | 900 | 93-96 | DF651 | DF875 |
| SPRINT 900 (left) | | 900 | 93- | DF651 | |
| SPRINT 900 (right) | | 900 | 93- | DF651 | DF875 |
| TROPHY 900 | | 900 | 94- | DF651 | DF875 |
| SPEED TRIPLE 955 i | | 955 | 99-01 | DF651 | DF013 |
| DAYTONA 1100 SPORT | | 1100 | 91- | DF651 | DF875 |
| 1200-3 (left) | | 1200 | 93- | DF651 | |
| 1200-3 (right) | | 1200 | 93- | DF651 | DF875 |
| 1200-4 (left) | | 1200 | 93- | DF651 | |
| 1200-4 (right) | | 1200 | 93- | DF651 | DF875 |
| TROPHY 1200 (left) | | 1200 | 91-93 | DF651 | |
| TROPHY 1200 (right) | | 1200 | 91-93 | DF651 | DF875 |
| TROPHY 1200 | | 1200 | 94- | DF651 | DF875 |

**DF 652 CW** — øext. 296 mm, øint. 118 — 5,0 — 12,5 — OE

| BRAND MARCA | MODEL MODELO | C.C. | YEAR | FRONT | REAR |
|---|---|---|---|---|---|
| **TRIUMPH** | | | | | |
| TRIDENT 750 (left) | | 750 | 93- | DF652 | |
| TRIDENT 750 (right) | | 750 | 93- | DF652 | DF875 |
| TRIDENT 900 (left) | | 900 | 93- | DF652 | |
| TRIDENT 900 (right) | | 900 | 93- | DF652 | DF875 |
| TROPHY 900 (left) | | 900 | 92-93 | DF652 | |
| TROPHY 900 (right) | | 900 | 92-93 | DF652 | DF875 |

**DF 653 CW** — øext. 320 mm, øint. 78 — 5,0 — 10,5 — OE

| BRAND MARCA | MODEL MODELO | C.C. | YEAR | FRONT | REAR |
|---|---|---|---|---|---|
| **TRIUMPH** | | | | | |
| DAYTONA 900 T-595 | | 900 | 97- | DF653 | DF013 |
| DAYTONA 955i | | 955 | 99-00 | DF653 | DF013 |
| DAYTONA 955i | | 955 | 01-01 | DF653 | DF013 |
| SPRINT RS | | 955 | 00- | DF653 | DF915 |
| SPRINT ST 955 | | 955 | 99- | DF653 | DF915 |
| SPEED TRIPLE T-509 | | 995 | 99- | DF653 | |

**DF 655 CW** — øext. 320 mm, øint. 78 — 5,0 — 14,5 — OE

| BRAND MARCA | MODEL MODELO | C.C. | YEAR | FRONT | REAR |
|---|---|---|---|---|---|
| **TRIUMPH** | | | | | |
| DAYTONA 955i | | 955 | 02- | DF655 | DF013 |
| SPEED TRIPLE 955 i | | 955 | 02- | DF655 | DF013 |
| SPRINT ST 1050 | | 1050 | 06- | DF655 | DF915 |

**DF 660 CW** — øext. 320 mm, øint. 64 — 5,0 — 10,5 — OE

**DF 660 CRWi-D** — øext. 320 mm, øint. 64 — 5,0 — 10,5

| BRAND MARCA | MODEL MODELO | C.C. | YEAR | FRONT | REAR |
|---|---|---|---|---|---|
| **APRILIA** | | | | | |
| PEGASO 650 ie | | 650 | 07- | DF660 | DF703 |
| PEGASO 650 ie FACTORY | | 650 | 06-08 | DF660 | DF703 |
| PEGASO 650 STRADA | | 650 | 05- | DF660 | DF703 |
| DORSODURO | | 750 | 08- | DF660 | |
| DORSODURO FACTORY | | 750 | 10- | DF660 | |
| SHIVER | | 750 | 07- | DF660 | |
| SHIVER SL GT / ABS | | 750 | 09- | DF660 | |
| MANA | | 850 | 07- | DF660 | |
| MANA GT / ABS | | 850 | 09- | DF660 | |
| MANA X / ABS | | 850 | 10- | DF660 | |
| BLUE MARLIN | | 1000 | 02- | DF660 | DF669 |
| RSV MILLE | | 1000 | 98-00 | DF660 | DF669 |
| RSV MILLE R | | 1000 | 00-00 | DF660 | DF669 |
| RSV MILLE SP | | 1000 | 00- | DF660 | DF669 |
| RSV TUONO | | 1000 | 02-05 | DF660 | DF669 |
| SL 1000 FALCO | | 1000 | 00- | DF660 | DF669 |
| **BENELLI** | | | | | |
| CENTURY RACER 899 | | 900 | 11- | DF660 | DF703 |
| TNT 899 S/T | | 900 | 08-10 | DF660 | |
| TNT 899 | | 900 | 11- | DF660 | |
| TORNADO TRE 900 LM | | 900 | 03- | DF660 | |
| TRE-K 899 | | 900 | 09- | DF660 | DF703 |
| TNT 1130 | | 1130 | 04- | DF660 | DF703 |
| TNT CAFÉ RACER | | 1130 | 06- | DF660 | DF703 |
| TNT R 160 | | 1130 | 10- | DF660 | DF703 |
| TNT TITANIUM | | 1130 | 06- | DF660 | DF703 |
| **BIMOTA** | | | | | |
| V-DUE 500 | | 500 | 98- | DF660 | |
| V-DUE 500 EVOLUZIONE | | 500 | 00- | DF660 | |
| YB9 SUPERSPORT 600 | | 600 | 93- | DF660 | |
| BB1 SUPERMONO | | 650 | 95- | DF660 | |
| TESI 1D 851 | | 851 | 90-91 | DF660 | |
| MANTRA 900 | | 900 | 95- | DF660 | |
| DB4 | | 900 | 98-99 | DF660 | |
| DB2 H.F, SR, INJECTION | | 904 | 93- | DF660 | |
| SB8 R SPECIAL | | 996 | 97- | DF660 | |
| DIECI BIPOSTO | | 1000 | 92-95 | DF660 | |
| DB 7 | | 1100 | 08-08 | DF660 | |
| SB6 | | 1100 | 98- | DF660 | |
| **CAGIVA** | | | | | |
| MITO 500 | | 500 | 07-07 | DF660 | |
| MITO 500 | | 500 | 08- | DF660 | |
| RIVER 500 | | 500 | 00- | DF660 | |
| RIVER 600 | | 600 | 95- | DF660 | |
| **DUCATI** | | | | | |
| 350 SPORT | | 350 | 91- | DF660 | DF636 |
| 400 MONSTER (JAPON) | | 400 | 04- | DF660 | DF636 |
| 400 SS | | 400 | 93- | DF660 | DF636 |
| 600 M MONSTER | | 600 | 94-00 | DF660 | DF636 |
| 600 SS | | 600 | 93- | DF660 | DF636 |
| MONSTER 620 S i.e | | 620 | 01-04 | DF660 | DF636 |
| MULTISTRADA MTS 620 DARK | | 620 | 05- | DF660 | DF636 |
| 620 SS | | 620 | 03- | DF660 | DF636 |
| MONSTER 696 | | 695 | 08- | DF660 | DF636 |
| 748 DESMO QUATTRO | | 748 | 94-97 | DF660 | DF630 |
| 748 | | 748 | 98-99 | DF660 | DF630 |
| 748 E/S | | 748 | 00-02 | DF660 | DF630 |
| 748 R | | 748 | 01-02 | DF660 | DF630 |
| 750 M MONSTER | | 750 | 96- | DF660 | DF636 |
| 750 SPORT | | 750 | 01- | DF660 | DF636 |
| 750 SS | | 750 | 91-97 | DF660 | DF636 |
| 750 SS | | 750 | 98- | DF660 | DF636 |
| MONSTER 800 S i.e | | 800 | 03-04 | DF660 | DF636 |
| 800 SS | | 800 | 03- | DF660 | DF636 |
| 800 SPORT | | 800 | 03- | DF660 | DF636 |
| 851 SPORT PRODUCTION | | 851 | 90-91 | DF660 | DF636 |
| MH 900 E | | 900 | 00- | DF660 | |
| 900 M MONSTER | | 900 | 93-00 | DF660 | DF636 |
| 900 SS | | 900 | 91-97 | DF660 | DF636 |
| 900 SS | | 900 | 98- | DF660 | DF636 |
| MONSTER S4 | | 916 | 01-02 | DF660 | DF636 |
| 916 STRADA | | 916 | 94-98 | DF660 | DF630 |
| 916 SENNA | | 916 | 94-97 | DF660 | DF630 |
| 916 SPS | | 916 | 98-98 | DF660 | DF630 |
| ST 4 | | 916 | 99- | DF660 | DF636 |
| ST 2 944 | | 944 | 97-98 | DF660 | DF636 |
| ST 3 / s ABS | | 992 | 06- | DF660 | DF636 |
| 996 S | | 996 | 99-01 | DF660 | DF630 |
| 996 R | | 996 | 99-01 | DF660 | DF630 |
| MONSTER S4R | | 996 | 03-05 | DF660 | DF769 |
| 998 R | | 998 | 02- | DF660 | DF630 |
| 1000 MONSTER S i.e. | | 1000 | 03-05 | DF660 | DF636 |
| 1000 MONSTER S2R | | 1000 | 06- | DF660 | DF769 |
| 1000 MONSTER S4R | | 1000 | 03-05 | DF660 | DF769 |
| GT 1000 | | 1000 | 05- | DF660 | DF636 |
| PAUL SMART 1000 | | 1000 | 05- | DF660 | DF636 |
| SPORT 1000 | | 1000 | 05- | DF660 | DF636 |
| SPORT 1000 S | | 1000 | 07- | DF660 | DF636 |
| SS 1000 DS | | 1000 | 03- | DF660 | DF636 |
| **GILERA-PIAGGIO** | | | | | |
| 600 SUPERSPORT | | 600 | 02- | DF660 | |
| **ITALJET** | | | | | |
| GRIFON | | 900 | 00- | DF660 | |
| KTM | | | | | |
| 690 SM /PRESTIGE | | 690 | 07- | DF660 | DF771 |
| LC8 990 DUKE | | 950 | 03- | DF660 | |

| | | | | |
|---|---|---|---|---|
| **LAVERDA** | | | | |
| GHOST | 650 | 96-97 | DF660 | DF458 |
| SPORT | 650 | 95- | DF660 | DF458 |
| 750 BLACK STRIKE | 750 | 98- | DF660 | DF458 |
| 750 FORMULA | 750 | 98- | DF660 | DF458 |
| 750 SUPER SPORT | 750 | 00- | DF660 | DF458 |
| **MONDIAL** | | | | |
| EVO | 1000 | 03- | DF660 | |
| NUDA | 1000 | 03- | DF660 | |
| PIEGA 1000 | 1000 | 03- | DF660 | |
| **MOTO GUZZI** | | | | |
| 750 BREVA i.e. | 750 | 03- | DF660 | |
| NEVADA 750 AQUILA NERA | 750 | 10- | DF660 | |
| STR V 750 ie | 750 | 03- | DF660 | |
| V 7 CLASSIC | 750 | 08- | DF660 | |
| V 7 CLASSIC CAFÉ | 750 | 09- | DF660 | |
| GRISO 850 8V | 850 | 06-08 | DF660 | |
| GRISO 850 8V SE SPECIAL EDITION | 850 | 09- | DF660 | |
| STR BREVA 850 | 850 | 06- | DF660 | |
| 940 CUSTOM | 940 | 07- | DF660 | |
| BELLAGIO AQUILA NERA | 940 | 10- | DF660 | |
| CALIFORNIA AQUILA NERA | 1000 | 10- | DF660 | |
| CALIFORNIA SPECIAL SPORT | 1000 | 03- | DF660 | |
| CALIFORNIA STONE | 1000 | 03- | DF660 | |
| CENTAURO | 1000 | 96- | DF660 | |
| DAYTONA i.e | 1000 | 95- | DF660 | |
| EV STONE | 1000 | 02- | DF660 | |
| MGS/01 1000 | 1000 | 03- | DF660 | |
| V11 SPORT BALLABIO | 1000 | 03- | DF660 | |
| 1100 SPORT | 1100 | 95-97 | DF660 | |
| BREVA 1100 | 1100 | 05- | DF660 | |
| CALIFORNIA ESPECIAL | 1100 | 99- | DF660 | |
| CALIFORNIA EV | 1100 | 97- | DF660 | |
| CALIFORNIA JACKAL | 1100 | 99- | DF660 | |
| GRISO | 1100 | 05- | DF660 | |
| STR 1100 | 1100 | 04- | DF660 | |
| V-10 CENTAURO SPORT | 1100 | 99- | DF660 | |
| V-11 LE MANS ROSSO CORSA | 1100 | 03- | DF660 | |
| V-11 SCURA | 1100 | 03- | DF660 | |
| V-11 SPORT / LE MANS | 1100 | 99- | DF660 | |
| STELVIO | 1150 | 08-10 | DF660 | |
| STELVIO TT | 1150 | 09-10 | DF660 | |
| SPORT 1200 | 1200 | 07-08 | DF660 | |
| SPORT 1200 V4 | 1200 | 09- | DF660 | |
| STELVIO | 1200 | 11- | DF660 | |
| STELVIO NTX | 1200 | 11-11 | DF660 | |
| STELVIO NTX | 1200 | 12- | DF660 | |
| **MOTO MORINI** | | | | |
| 9 1/2 | 950 | 05- | DF660 | |
| CORSARIO 1200 | 1200 | 05- | DF660 | |
| CORSARIO AVIO 1200 | 1200 | 08- | DF660 | |
| MM3 | 1200 | 07- | DF660 | |
| **MZ/MuZ** | | | | |
| 1000 S | 1000 | 01- | DF660 | |
| **NORTON** | | | | |
| COMMANDO 961 CAFE RACER | 961 | 10- | DF660 | |
| COMMANDO 961 SE | 961 | 10- | DF660 | |
| COMMANDO 961 SF | 961 | 13- | DF660 | |
| COMMANDO 961 SPORT | 961 | 10- | DF660 | |
| **VOXAN** | | | | |
| CAFÉ RACER | 1000 | 99- | DF660 | |
| BOXER | 1000 | 00- | DF660 | |
| ROADSTER | 1000 | 99- | DF660 | |
| SCRAMBLER | 1000 | 00- | DF660 | |
| **YAMAHA** | | | | |
| SZR 660 | 660 | 95- | DF660 | DF468 |
| YZF 750 R, SP | 750 | 93-95 | DF660 | DF458 |
| FZR 1000 EXUP | 1000 | 93-95 | DF660 | DF471 |
| XJR 1200 | 1200 | 94-94 | DF660 | DF471 |
| XJR 1200 (EUROPA) | 1200 | 95- | DF660 | DF471 |

**DF 661 CW** — øext. 320 mm, øint. 78 — 4,5 / 17,5 — OE

**DF 661 CRWi-D** — øext. 320 mm, øint. 78 — 4,5 / 17,5

| BRAND MARCA | MODEL MODELO | C.C. | YEAR | FRONT | REAR |
|---|---|---|---|---|---|
| **TRIUMPH** | | | | | |
| SPEED TRIPLE 1050 | | 1050 | 05-05 | DF661 | DF013 |
| SPEED TRIPLE 1050 | | 1050 | 06-07 | DF661 | DF013 |
| TIGER 1050 | | 1050 | 07- | DF661 | DF915 |
| TIGER 1050 ABS | | 1050 | 07- | DF661 | DF915 |
| TIGER SPORT 1050 ABS | | 1050 | 13- | DF661 | |

**DF 662 W** — øext. 285 mm, øint. 164 — 5,0 — OE

| BRAND MARCA | MODEL MODELO | C.C. | YEAR | FRONT | REAR |
|---|---|---|---|---|---|
| **BMW** | | | | | |
| K 75 | | 750 | 93- | DF662 | DF662 |
| K 75 RT, S | | 750 | 93- | DF662 | DF662 |
| R 80 GS | | 800 | 93- | DF662 | - |
| R 80 RT | | 800 | 93- | DF662 | - |
| R 100 GS, PD, RT | | 1000 | 93-94 | DF662 | - |
| R 100 GS, R | | 1000 | 93-94 | DF631 | DF662 |
| K 1100 RS ABS | | 1100 | 93- | DF631 | DF662 |
| K 1100 LT SPECIAL EDITION | | 1100 | 95- | DF631 | DF662 |
| K 1100 LT (ABS) | | 1100 | 93-94 | DF631 | DF662 |
| R 1100 LT | | 1100 | 95- | DF631 | DF662 |
| R 1100 RS | | 1100 | 93-94 | DF631 | DF662 |

**DF 663 FLW** — øext. 298 mm, øint. 105 — 4,0 — OE

| BRAND MARCA | MODEL MODELO | C.C. | YEAR | FRONT | REAR |
|---|---|---|---|---|---|
| **APRILIA** | | | | | |
| PEGASO 600 4 VALVOLE | | 600 | 91- | DF663 | DF632 |
| PEGASO 600 AE | | 600 | 91- | DF663 | DF632 |
| PEGASO 650 | | 650 | 91-93 | DF663 | DF632 |
| PEGASO 650 | | 650 | 94-97 | DF663 | DF632 |
| PEGASO 650 | | 650 | 98-00 | DF663 | DF632 |
| PEGASO 650 ie | | 650 | 01-06 | DF663 | DF703 |
| **BMW** | | | | | |
| F 650 | | 650 | 93- | DF663 | DF703 |
| F 650 CS SCARVER | | 650 | 01- | DF663 | DF703 |
| F 650 DAKAR | | 650 | 00-01 | DF663 | DF703 |
| F 650 GS | | 650 | 00- | DF663 | DF703 |
| F 650 GS BICILINDRICO | | 650 | 07- | DF663 | DF763 |
| F 650 ST | | 650 | 97- | DF663 | DF703 |
| G 650 GS | | 650 | 09- | DF663 | DF703 |
| G 650 XCHALLENGE | | 650 | 07- | DF663 | |
| G 650 XCOUNTRY | | 650 | 07- | DF663 | DF703 |
| **HUSQVARNA** | | | | | |
| TR 650 STRADA | | 650 | 12- | DF663 | DF703 |
| TR 650 TERRA | | 650 | 12- | DF663 | DF703 |

**DF 664 CWi-D** — øext. 300 mm, øint. 105 — 5,0 / 0,0 — OE

| BRAND MARCA | MODEL MODELO | C.C. | YEAR | FRONT | REAR |
|---|---|---|---|---|---|
| **BMW** | | | | | |
| F 700 GS | | 700 | 13- | DF664 | DF763 |
| F 800 GS | | 800 | 08- | DF664 | DF763 |

**DF 666 W** — øext. 240 mm, øint. 125,5 — 4,0 — OE

| BRAND MARCA | MODEL MODELO | C.C. | YEAR | FRONT | REAR |
|---|---|---|---|---|---|
| **APRILIA** | | | | | |
| SR MAX 300 | | 300 | 12- | DF667 | DF666 |
| **GILERA-PIAGGIO** | | | | | |
| DNA 180 (G) | | 180 | 01- | DF666 | DF666 |
| DNA 180 (H) | | 180 | 01- | DF666 | DF666 |
| RUNNER 180 SP | | 180 | 99-00 | DF737 | DF666 |
| RUNNER 180 VXR (G) | | 180 | 01- | DF737 | DF666 |
| RUNNER 180 VXR (H) | | 180 | 01- | DF737 | DF666 |
| NEXUS i.e. | | 250 | 06-06 | DF667 | DF666 |
| NEXUS i.e. | | 250 | 07- | DF667 | DF666 |
| NEXUS i.e. | | 300 | 09- | DF667 | DF666 |
| FUOCO 500 i.e. | | 500 | 07- | DF714 | DF666 |
| NEXUS | | 500 | 03-05 | DF667 | DF666 |
| NEXUS i.e. SP | | 500 | 06- | DF667 | DF666 |
| **PEUGEOT** | | | | | |
| SATELIS 500 | | 500 | 06- | DF667 | DF666 |
| **PIAGGIO** | | | | | |
| X 9 AMALFI | | 180 | 01- | DF666 | DF666 |
| X 8 | | 200 | 04- | DF667 | DF666 |
| X 9 | | 200 | 01-02 | DF666 | DF666 |
| X 9 EVOLUTION DER. | | 200 | 03- | DF667 | DF666 |
| CARNABY 250 | | 250 | 09- | DF666 | DF666 |
| MP 3 250 | | 250 | 06-08 | DF714 | DF666 |
| MP 3 250 LT | | 250 | 09- | DF714 | DF666 |
| X 8 | | 250 | 06- | DF667 | DF666 |
| X 9 | | 250 | 00- | DF666 | DF666 |
| X 9 EVOLUTION LEFT/IZQ. | | 250 | 04- | DF666 | |
| X 9 EVOLUTION RIGHT/DER. | | 250 | 04- | DF666 | DF666 |
| X EVO 250 | | 250 | 08- | DF667 | DF666 |
| BEVERLY 300 | | 300 | 10- | | DF666 |
| MP 3 300 LT SPORT | | 300 | 11- | DF714 | DF666 |
| MP 3 300 YOURBAN | | 300 | 11- | DF714 | DF666 |
| MP 3 300 ie YOURBAN | | 300 | 13- | DF714 | DF666 |
| X 7 | | 300 | 10- | DF667 | DF666 |
| BEVERLY 400 i.e. | | 400 | 06- | DF667 | DF666 |
| MP 3 400 i.e. | | 400 | 07- | DF714 | DF666 |
| MP 3 400 LT | | 400 | 09- | DF714 | DF666 |
| X 8 i.e.w. LEFT/IZQ. | | 400 | 06- | DF666 | |
| X 8 i.e.w. RIGHT/DER. | | 400 | 06- | DF666 | DF666 |
| X EVO 400 LEFT/IZQ. | | 400 | 08- | DF666 | |
| X EVO 400 RIGHT/DER. | | 400 | 08- | DF666 | DF666 |
| BEVERLY 500 | | 500 | 03- | DF667 | DF666 |
| MP 3 500 SPORT | | 500 | 10- | DF714 | DF666 |
| X 9 | | 500 | 01-02 | DF667 | DF666 |
| X 9 EVOLUTION | | 500 | 03- | DF667 | DF666 |
| X 9 i.e. | | 500 | 07- | DF667 | DF666 |

**DF 667 W** — øext. 260 mm, øint. 125,5 — 4,0 — OE

| BRAND MARCA | MODEL MODELO | C.C. | YEAR | FRONT | REAR |
|---|---|---|---|---|---|
| **APRILIA** | | | | | |
| SR MAX 300 | | 300 | 12- | DF667 | DF666 |



**OE:** Original equipment (original replacement disc) - **OE:** Equipo original (disco de remplazo del original) For other models years previous to 1990 visit **www.galferonline.es** - Para otros modelos anteriores al año 1990 visitar **www.galferonline.es**
For consult TÜV (ABE) type approvals visit **www.galfermoto.com --> DOWNALOAD --> TÜV CERTIFICATIONS** - Para consultar las homologaciones TÜV (ABE) visitar **www.galfermoto.com --> DESCARGAS --> CERTIFICACIONES TÜV**

| | | | | |
|---|---|---|---|---|
| **DERBI** | | | | |
| GP 1 250 | 250 | 05-07 | | DF667 |
| **GILERA-PIAGGIO** | | | | |
| NEXUS i.e. | 250 | 06-06 | DF667 | DF666 |
| NEXUS i.e. | 250 | 07- | DF667 | DF666 |
| NEXUS i.e. | 300 | 09- | DF667 | DF666 |
| NEXUS | 500 | 03-05 | DF667 | DF666 |
| NEXUS i.e. SP | 500 | 06- | DF667 | DF666 |
| **PEUGEOT** | | | | |
| SATELIS 500 | 500 | 06- | DF667 | DF666 |
| **PIAGGIO** | | | | |
| BEVERLY 200 4T (G) | 200 | 02- | DF667 | DF667 |
| BEVERLY 200 4T (H) | 200 | 02- | DF667 | DF667 |
| CARNABY 200 | 200 | 07- | DF667 | DF667 |
| X 8 | 200 | 04- | DF667 | DF666 |
| X 9 EVOLUTION IZQ. | 200 | 03- | DF667 | |
| X 9 EVOLUTION DER. | 200 | 03- | DF667 | DF666 |
| BEVERLY 250 4T (H) | 250 | 04- | DF667 | DF667 |
| X 8 | 250 | 06- | DF667 | DF666 |
| X EVO 250 | 250 | 08- | DF667 | DF666 |
| BEVERLY TOURER 300 | 300 | 09- | DF667 | DF667 |
| CARNABY CRUISER 300 i.e. | 300 | 09- | DF667 | DF667 |
| X 7 | 300 | 10- | DF667 | DF666 |
| BEVERLY 400 i.e. | 400 | 06- | DF667 | DF666 |
| BEVERLY 500 | 500 | 03- | DF667 | DF666 |
| X 9 | 500 | 01-02 | DF667 | DF666 |
| X 9 EVOLUTION | 500 | 03- | DF667 | DF666 |
| X 9 i.e. | 500 | 07- | DF667 | DF666 |

**DF 669 W** — øext. 220 mm / øint. 102 — 4,0 — OE

| BRAND MARCA | MODEL MODELO | C.C. | YEAR | FRONT | REAR |
|---|---|---|---|---|---|
| **APRILIA** | | | | | |
| RS 250 | | 250 | 95-97 | | DF669 |
| RS 250 | | 250 | 98- | | DF669 |
| BLUE MARLIN | | 1000 | 02- | DF660 | DF669 |
| RSV4 FACTORY | | 1000 | 09- | DF883 | DF669 |
| RSV4 R | | 1000 | 09-14 | DF883 | DF669 |
| RSV4 RR | | 1000 | 15- | DF883 | DF669 |
| RSV MILLE | | 1000 | 98-00 | DF660 | DF669 |
| RSV MILLE | | 1000 | 01- | DF883 | DF669 |
| RSV MILLE R | | 1000 | 00-00 | DF660 | DF669 |
| RSV MILLE R | | 1000 | 01- | DF883 | DF669 |
| RSV MILLE SP | | 1000 | 00- | DF660 | DF669 |
| RSV TUONO | | 1000 | 02-05 | DF660 | DF669 |
| RSV TUONO R | | 1000 | 02- | DF883 | DF669 |
| RSV TUONO V4 R | | 1000 | 11- | DF883 | DF669 |
| RSV R FACTORY | | 1000 | 04- | DF883 | DF669 |
| SL 1000 FALCO | | 1000 | 00- | DF660 | DF669 |
| RSV TUONO V4 R | | 1100 | 15- | DF883 | DF669 |
| **BENELLI** | | | | | |
| VELVET 150 | | 150 | 98- | DF669 | DF649 |
| VELVET 250 | | 250 | 99- | DF669 | DF649 |

**DF 671 W** — øext. 260 mm / øint. 60 — 4,0 — OE

**DF 671 FLW** — øext. 260 mm / øint. 60 — 4,0 — OE

| BRAND MARCA | MODEL MODELO | C.C. | YEAR | FRONT | REAR |
|---|---|---|---|---|---|
| **APRILIA** | | | | | |
| SCARABEO 150 4T | | 150 | 98- | DF671 | DF612 |
| SCARABEO 200 / GT | | 200 | 02-06 | DF671 | DF612 |
| SCARABEO 200 | | 200 | 07- | DF671 | |
| SPORT CITY 200 | | 200 | 04- | DF671 | DF612 |
| SCARABEO 250 | | 250 | 04-04 | DF671 | DF612 |
| SCARABEO 250 ie | | 250 | 05- | DF671 | |
| SPORT CITY 250 | | 250 | 06- | DF671 | DF612 |
| SCARABEO 300 S | | 300 | 09- | DF671 | |
| SPORT CITY CUBE 300 | | 300 | 08- | DF671 | DF612 |
| ARRECIFE 400 SPRINT | | 400 | 07- | DF671 | |
| ATLANTIC 400 SPRINT | | 400 | 07- | DF671 | |
| SCARABEO 400 ie | | 400 | 07- | DF671 | |
| ARRECIFE 500 | | 500 | 02- | DF671 | DF612 |
| ARRECIFE 500 SPRINT | | 500 | 05- | DF671 | DF612 |
| ATLANTIC 500 | | 500 | 02- | DF671 | DF612 |
| ATLANTIC 500 SPRINT | | 500 | 05- | DF671 | DF612 |
| SCARABEO 500 | | 500 | 03- | DF671 | |
| SCARABEO 500 ABS++ | | 500 | 03- | DF671 | DF612 |
| **DERBI** | | | | | |
| RAMBLA 250 ie | | 250 | 08- | DF671 | DF612 |
| RAMBLA 300 ie | | 300 | 10- | DF671 | DF612 |

**DF 672 FLW** — øext. 300 mm / øint. 127 — 4,0 — OE

| BRAND MARCA | MODEL MODELO | C.C. | YEAR | FRONT | REAR |
|---|---|---|---|---|---|
| **KTM** | | | | | |
| 560 SMR | | 560 | 07- | DF672 | DF607 |
| 640 LC4 ADVENTURE R | | 640 | 99-05 | DF672 | DF607 |
| 640 LC4 ADVENTURE R | | 640 | 06- | DF672 | DF607 |
| 690 SM | | 690 | 07- | DF672 | DF782 |
| 690 SMC R | | 690 | 13- | DF672 | DF771 |
| 690 SMC R ABS | | 690 | 13- | DF672 | DF771 |
| 950 ADVENTURE S | | 950 | 03- | DF672 | DF703 |
| 990 ADVENTURE R | | 990 | 09- | DF672 | DF782 |

**DF 674 W** — øext. 260 mm / øint. 108 — 4,0 — OE

**DF 674 FLW** — øext. 260 mm / øint. 108 — 3,0 — OE

| BRAND MARCA | MODEL MODELO | C.C. | YEAR | FRONT | REAR |
|---|---|---|---|---|---|
| **GAS GAS** | | | | | |
| 250 PAMPERA | | 250 | 03- | DF674 | |

**DF 675 W** — øext. 200 mm / øint. 63 — 4,0 — OE

| BRAND MARCA | MODEL MODELO | C.C. | YEAR | FRONT | REAR |
|---|---|---|---|---|---|
| **RIEJU** | | | | | |
| TANGO TRAIL 250 | | 250 | 09- | DF677 | DF675 |

**DF 676 CW** — øext. 296 mm / øint. 62 — 5,0 / 17,0 — OE

| BRAND MARCA | MODEL MODELO | C.C. | YEAR | FRONT | REAR |
|---|---|---|---|---|---|
| **HONDA** | | | | | |
| CBR 600 F4 | | 600 | 99-00 | DF676 | DF013 |
| CROSSRUNNER X | | 800 | 11-14 | DF676 | |
| VFR 800 | | 800 | 98-00 | DF676 | DF029 |
| VFR 800 Vtec (INTERCEPTOR USA) | | 800 | 01-05 | DF676 | DF029 |
| VFR 800 | | 800 | 06- | DF676 | |
| VFR 800 ABS | | 800 | 06-13 | DF676 | |
| CBR 900 RR | | 900 | 92-92 | DF676 | DF013 |
| VARADERO | | 1000 | 99-02 | DF676 | DF049 |
| VARADERO | | 1000 | 03- | DF676 | DF028 |
| VARADERO ABS | | 1000 | 04- | DF676 | DF028 |
| F6C 1500 VALKYRIA | | 1500 | 97- | DF676 | DF054 |
| GL 1800 GOLD WING | | 1800 | 01-05 | DF676 | |
| GL 1800 GOLD WING | | 1800 | 06- | DF676 | |
| GL 1800 GOLD WING 12YM | | 1800 | 12- | DF676 | |
| GL 1800 GOLD WING F6B | | 1800 | 13- | DF676 | |
| GL 1800 GOLD WING F6 40th | | 1800 | 15- | DF676 | |
| **HONDA MALASIA** | | | | | |
| GL 1800 GOLD WING F6B | | 1800 | 13- | DF676 | |

**DF 677 W** — øext. 260 mm / øint. 108 — 3,5 — OE

**DF 677 FLW** — øext. 260 mm / øint. 108 — 3,0 — OE

**DF 677 FLS** — øext. 270 mm / øint. 108 — 3,0 — SP027

**DF 677 FRS** — øext. 270 mm / øint. 108 — 3,0 — SP027

**DF 677 CW** — øext. 320 mm / øint. 108 — 5,0 / 0,0 — SP

| BRAND MARCA | MODEL MODELO | C.C. | YEAR | FRONT | REAR |
|---|---|---|---|---|---|
| **BETA** | | | | | |
| ALP 4.0 | | 350 | 03-07 | DF677 | DF678 |
| **CCM** | | | | | |
| 404 E | | 404 | 03- | DF677 | DF678 |
| 404 DS | | 404 | 03- | DF677 | DF678 |
| 604 E DS | | 604 | 98-03 | DF677 | DF678 |
| 604 E SUPER MOTARD | | 604 | 98-03 | DF677 | DF678 |
| 604 RS ROADSTER | | 604 | 00-03 | DF677 | DF678 |
| 644 DS | | 644 | 04- | DF677 | DF678 |
| 644 DS SUPER MOTARD | | 644 | 04- | DF677 | DF678 |
| R 30 | | 644 | 02- | DF677 | DF678 |
| **GAS GAS** | | | | | |
| HALLEY 450 | | 450 | 09- | DF677 | DF678 |
| **RIEJU** | | | | | |
| TANGO TRAIL 250 | | 250 | 09- | DF677 | DF675 |

**DF 678 WLL** — øext. 220 mm / øint. 108 — 4,0 — OE

**DF 678 WS** — øext. 240 mm / øint. 108 — 4,0 — SP

| BRAND MARCA | MODEL MODELO | C.C. | YEAR | FRONT | REAR |
|---|---|---|---|---|---|
| **BETA** | | | | | |
| ALP 4.0 | | 350 | 03-07 | DF677 | DF678 |
| **CCM** | | | | | |
| 404 E | | 404 | 03- | DF677 | DF678 |
| 404 DS | | 404 | 03- | DF677 | DF678 |
| 604 E DS | | 604 | 98-03 | DF677 | DF678 |
| 604 E SUPER MOTARD | | 604 | 98-03 | DF677 | DF678 |
| 604 RS ROADSTER | | 604 | 00-03 | DF677 | DF678 |

| | | | | |
|---|---|---|---|---|
| 644 DS | 644 | 04- | DF677 | DF678 |
| 644 DS SUPER MOTARD | 644 | 04- | DF677 | DF678 |
| R 30 | 644 | 02- | DF677 | DF678 |
| **GAS GAS** | | | | |
| HALLEY 450 | 450 | 09- | DF677 | DF678 |

**DF 679 W** — øext. 292 mm øint. 50,5 — 5,0 — OE

| BRAND MARCA | MODEL MODELO | C.C. | YEAR | FRONT | REAR |
|---|---|---|---|---|---|
| **HARLEY DAVIDSON** | | | | | |
| FXSTS/i SOFTAIL SPRINGER | | 1340 | 00- | DF679 | DF681 |
| FLS SOFTAIL SLIM | | 1450 | 12- | DF679 | DF681 |
| FLHR SERIES | | 1340 | 94-99 | DF679 | |
| FLHRCI SERIES | | 1340 | 94-99 | DF679 | |

**DF 680 W** — øext. 292 mm øint. 56 — 5,0 — OE

**DF 680 FLW** — øext. 292 mm øint. 56 — 5,0 — OE

**DF 680 CW** — øext. 292 mm øint. 56 — 5,0 — OE

| BRAND MARCA | MODEL MODELO | C.C. | YEAR | FRONT | REAR |
|---|---|---|---|---|---|
| **HARLEY DAVIDSON** | | | | | |
| XL 50th ANIVERSARIO | | 883 | 07- | DF680 | DF681 |
| XL IRON | | 883 | 09- | DF680 | DF681 |
| XL ROADSTER | | 883 | 10- | DF680 | DF681 |
| XL SPORTSTER CUSTOM | | 883 | 00-03 | DF680 | DF681 |
| XL SPORTSTER CUSTOM | | 883 | 04- | DF680 | DF681 |
| XL SPORTSTER HUGGER | | 883 | 00- | DF680 | DF681 |
| XL SPORTSTER LOW | | 883 | 04- | DF680 | DF681 |
| XL SPORTSTER R | | 883 | 05- | DF680 | DF681 |
| XL SPORTSTER STANDARD | | 883 | 04- | DF680 | DF681 |
| XLH SPORTSTER | | 883 | 00- | DF680 | DF681 |
| XLH SPORTSTER R | | 883 | 00-04 | DF680 | DF681 |
| XLH SPORTSTER R | | 883 | 05- | DF680 | DF681 |
| XL L SUPERLOW | | 883 | 11- | DF680 | DF681 |
| XL NIGHTSTER | | 1200 | 08- | DF680 | DF681 |
| XL ROADSTER | | 1200 | 04- | DF680 | DF681 |
| XL SPORTSTER CUSTOM | | 1200 | 00-03 | DF680 | DF681 |
| XL SPORTSTER CUSTOM | | 1200 | 04- | DF680 | DF681 |
| XL SPORTSTER LOW | | 1200 | 07- | DF680 | DF681 |
| XL SPORTSTER SPORT | | 1200 | 00- | DF680 | DF681 |
| XL 1200 V SEVENTY-TWO | | 1200 | 12- | DF680 | DF681 |
| XL 1200 X FORTY EIGHT | | 1200 | 10- | DF680 | DF681 |
| XR 1200 | | 1200 | 08-10 | DF680 | |
| FXD SUPER GLIDE | | 1340 | 00- | DF680 | DF681 |
| FXDL LOW RIDER | | 1340 | 00- | DF680 | DF681 |
| FXDSCON DYNA CONVER | | 1340 | 00- | DF680 | DF681 |
| FXDWG WIDE GLIDE | | 1340 | 00-07 | DF680 | DF681 |
| FXDX SUPER GLIDE SPORT | | 1340 | 00- | DF680 | DF681 |
| FXDXT SUPER GLIDE T SPORT | | 1340 | 01- | DF680 | DF681 |
| FXDi SUPER GLIDE | | 1450 | 04-05 | DF680 | DF681 |
| FXDLi LOW RIDER | | 1450 | 04-05 | DF680 | DF681 |
| FXDWGi WIDE GLIDE | | 1450 | 04-05 | DF680 | DF681 |
| FXDXi SUPER GLIDE SPORT | | 1450 | 04- | DF680 | DF681 |
| FLSTC/i HERITAGE CLASSIC | | 1340 | 00- | DF680 | DF681 |
| FLSTF/i FAT BOY | | 1340 | 00-06 | DF680 | DF681 |
| FLSTi FAT BOY 15th ANIVERSARIO | | 1340 | 05- | DF680 | DF681 |
| FLSTS HERITAGE SPRINGER | | 1340 | 00- | DF680 | DF681 |
| FXST/i SOFTAIL STANDARD | | 1340 | 00-05 | DF680 | DF682 |
| FXSTB/i NIGHT TRAIN | | 1340 | 00-05 | DF680 | DF681 |
| FXSTD/i SOFTAIL DEUCE | | 1340 | 00- | DF680 | DF681 |
| FLST/i HERITAGE SOFTAIL | | 1450 | 06- | DF680 | DF681 |
| FLSTC HERITAGE CLASSIC SOFTAIL | | 1450 | 07-07 | DF680 | DF681 |
| FLSTC HERITAGE CLASSIC SOFTAIL | | 1450 | 08- | DF680 | DF681 |
| FLSTF FAT BOY | | 1450 | 08- | DF680 | DF681 |
| FLSTF/i FAT BOY | | 1450 | 07-07 | DF680 | DF681 |
| FLSTFB FAT BOY SPECIAL | | 1450 | 10- | DF680 | DF681 |
| FLSTN/i SOFTAIL DE LUXE | | 1450 | 05-07 | DF680 | DF681 |
| FLSTN/i SOFTAIL DE LUXE | | 1450 | 08- | DF680 | DF681 |
| FLSTSB SOFTAIL CROSS BONES | | 1450 | 08- | DF680 | DF681 |
| FLSTSC/i SPRINGER CLASSIC | | 1450 | 05- | DF680 | DF681 |
| FLSTSC/i SPRINGER CLASSIC SOFTAIL | | 1450 | 06- | DF680 | DF681 |
| FXCW ROCKER | | 1450 | 08- | DF680 | DF681 |
| FXCWC ROCKER C | | 1450 | 08- | DF680 | DF681 |
| FXS BLACKLINE | | 1450 | 11- | DF680 | DF681 |
| FXST/i SOFTAIL STANDARD | | 1450 | 06- | DF680 | DF681 |
| FXSTB/i NIGHT TRAIN SOFTAIL | | 1450 | 06-07 | DF680 | DF681 |
| FXSTB/i NIGHT TRAIN SOFTAIL | | 1450 | 08- | DF680 | DF681 |
| FXSTC SOFTAIL CUSTOM | | 1450 | 07-07 | DF680 | DF681 |
| FXSTC SOFTAIL CUSTOM | | 1450 | 08- | DF680 | DF681 |
| FLHR/i ROAD KING | | 1340 | 00-07 | DF680 | DF681 |
| FLHR/i ROAD KING | | 1340 | 00-07 | DF680 | DF681 |
| FLHRS/i ROAD KING CUSTOM | | 1340 | 04-07 | DF680 | DF681 |
| FLHT/i ELECTRA GLIDE STANDARD | | 1340 | 00-07 | DF680 | DF681 |
| FLHTC/i ELECTRA GLIDE CLASSIC | | 1340 | 04-07 | DF680 | DF681 |
| FLHTCU ELECTRA GLIDE ULTRA CLASSIC | | 1340 | 00-07 | DF680 | DF681 |
| FLTR/i ROAD GLIDE | | 1340 | 00-07 | DF680 | DF681 |
| FLHX/i STREET GLIDE | | 1450 | 06-07 | DF680 | DF681 |

**DF 681 W** — øext. 292 mm øint. 56 — 5,0 — OE

| BRAND MARCA | MODEL MODELO | C.C. | YEAR | FRONT | REAR |
|---|---|---|---|---|---|
| **HARLEY DAVIDSON** | | | | | |
| XL 50th ANIVERSARIO | | 883 | 07- | DF680 | DF681 |
| XL IRON | | 883 | 09- | DF680 | DF681 |
| XL ROADSTER | | 883 | 10- | DF680 | DF681 |
| XL SPORTSTER CUSTOM | | 883 | 00-03 | DF680 | DF681 |
| XL SPORTSTER CUSTOM | | 883 | 04- | DF680 | DF681 |
| XL SPORTSTER HUGGER | | 883 | 00- | DF680 | DF681 |
| XL SPORTSTER LOW | | 883 | 04- | DF680 | DF681 |
| XL SPORTSTER R | | 883 | 05- | DF680 | DF681 |
| XL SPORTSTER STANDARD | | 883 | 04- | DF680 | DF681 |
| XLH SPORTSTER | | 883 | 00- | DF680 | DF681 |
| XLH SPORTSTER R | | 883 | 00-04 | DF680 | DF681 |
| XLH SPORTSTER R | | 883 | 05- | DF680 | DF681 |
| XL L SUPERLOW | | 883 | 11- | DF680 | DF681 |
| XL NIGHTSTER | | 1200 | 08- | DF680 | DF681 |
| XL ROADSTER | | 1200 | 04- | DF680 | DF681 |
| XL SPORTSTER CUSTOM | | 1200 | 00-03 | DF680 | DF681 |
| XL SPORTSTER CUSTOM | | 1200 | 04- | DF680 | DF681 |
| XL SPORTSTER LOW | | 1200 | 07- | DF680 | DF681 |
| XL SPORTSTER SPORT | | 1200 | 00- | DF680 | DF681 |
| XL 1200 V SEVENTY-TWO | | 1200 | 12- | DF680 | DF681 |
| XL 1200 X FORTY EIGHT | | 1200 | 10- | DF680 | DF681 |
| FXD SUPER GLIDE | | 1340 | 00- | DF680 | DF681 |
| FXDL LOW RIDER | | 1340 | 00- | DF680 | DF681 |
| FXDSCON DYNA CONVER | | 1340 | 00- | DF680 | DF681 |
| FXDWG WIDE GLIDE | | 1340 | 00-07 | DF680 | DF681 |
| FXDX SUPER GLIDE SPORT | | 1340 | 00- | DF680 | DF681 |
| FXDXT SUPER GLIDE T SPORT | | 1340 | 01- | DF680 | DF681 |
| FXD SUPER GLIDE (cast wheel) | | 1450 | 08- | | DF681 |
| FXDBi STREET BOB | | 1450 | 06-07 | | DF681 |
| FXDBi STREET BOB | | 1450 | 08- | | DF681 |
| FXDCi SUPER GLIDE CUSTOM | | 1450 | 05- | | DF681 |
| FXDCi SUPER GLIDE CUSTOM (cast wheel) | | 1450 | 06- | | DF681 |
| FXDCi SUPER GLIDE CUSTOM DYNA | | 1450 | 06-07 | | DF681 |
| FXDCi SUPER GLIDE CUSTOM DYNA | | 1450 | 08- | | DF681 |
| FXDF FAT BOB (cast wheel) | | 1450 | 08- | | DF681 |
| FXDi 35th ANIVERSARIO SUPER GLIDE | | 1450 | 06- | | DF681 |
| FXDi SUPER GLIDE | | 1450 | 04-05 | DF680 | DF681 |
| FXDi SUPER GLIDE (cast wheel) | | 1450 | 06- | | DF681 |
| FXDLi LOW RIDER | | 1450 | 04-05 | DF680 | DF681 |
| FXDLi LOW RIDER (cast wheel) | | 1450 | 06-07 | | DF681 |
| FXDLi LOW RIDER (cast wheel) | | 1450 | 08- | | DF681 |
| FXDLi LOW RIDER DYNA | | 1450 | 06- | | DF681 |
| FXDWG DYNA WIDE GLIDE | | 1450 | 08- | | DF681 |
| FXDWG WIDE GLIDE | | 1450 | 08- | | DF681 |
| FXDWGi WIDE GLIDE | | 1450 | 04-05 | DF680 | DF681 |
| FXDWGi WIDE GLIDE DYNA | | 1450 | 06-09 | | DF681 |
| FXDWGi WIDE GLIDE DYNA | | 1450 | 10- | | DF681 |
| FXDXi SUPER GLIDE SPORT | | 1450 | 04- | DF680 | DF681 |
| FLSTC/i HERITAGE CLASSIC | | 1340 | 00- | DF680 | DF681 |
| FLSTF/i FAT BOY | | 1340 | 00-06 | DF680 | DF681 |
| FLSTi FAT BOY 15th ANIVERSARIO | | 1340 | 05- | DF680 | DF681 |
| FLSTS HERITAGE SPRINGER | | 1340 | 00- | DF680 | DF681 |
| FXSTB/i NIGHT TRAIN | | 1340 | 00-05 | DF680 | DF681 |
| FXSTD/i SOFTAIL DEUCE | | 1340 | 00- | DF680 | DF681 |
| FXSTS/i SOFTAIL SPRINGER | | 1340 | 00- | DF679 | DF681 |
| FLS SOFTAIL SLIM | | 1450 | 12- | DF679 | DF681 |
| FLST/i HERITAGE SOFTAIL | | 1450 | 06- | DF680 | DF681 |
| FLSTC HERITAGE CLASSIC SOFTAIL | | 1450 | 07-07 | DF680 | DF681 |
| FLSTC HERITAGE CLASSIC SOFTAIL | | 1450 | 08- | DF680 | DF681 |
| FLSTF FAT BOY | | 1450 | 08- | DF680 | DF681 |
| FLSTF/i FAT BOY | | 1450 | 07-07 | DF680 | DF681 |
| FLSTFB FAT BOY SPECIAL | | 1450 | 10- | DF680 | DF681 |
| FLSTN/i SOFTAIL DE LUXE | | 1450 | 05-07 | DF680 | DF681 |
| FLSTN/i SOFTAIL DE LUXE | | 1450 | 08- | DF680 | DF681 |
| FLSTSB SOFTAIL CROSS BONES | | 1450 | 08- | DF680 | DF681 |
| FLSTSC/i SPRINGER CLASSIC | | 1450 | 05- | DF680 | DF681 |
| FLSTSC/i SPRINGER CLASSIC SOFTAIL | | 1450 | 06- | DF680 | DF681 |
| FXCW ROCKER | | 1450 | 08- | DF680 | DF681 |
| FXCWC ROCKER C | | 1450 | 08- | DF680 | DF681 |
| FXS BLACKLINE | | 1450 | 11- | DF680 | DF681 |
| FXST/i SOFTAIL STANDARD | | 1450 | 06- | DF680 | DF681 |
| FXSTB/i NIGHT TRAIN SOFTAIL | | 1450 | 06-07 | DF680 | DF681 |
| FXSTB/i NIGHT TRAIN SOFTAIL | | 1450 | 08- | DF680 | DF681 |
| FXSTC SOFTAIL CUSTOM | | 1450 | 07-07 | DF680 | DF681 |
| FXSTC SOFTAIL CUSTOM | | 1450 | 08- | DF680 | DF681 |
| FLHR/i ROAD KING | | 1340 | 00-07 | DF680 | DF681 |
| FLHR/i ROAD KING | | 1340 | 00-07 | DF680 | DF681 |
| FLHRS/i ROAD KING CUSTOM | | 1340 | 04-07 | DF680 | DF681 |
| FLHT/i ELECTRA GLIDE STANDARD | | 1340 | 00-07 | DF680 | DF681 |
| FLHTC/i ELECTRA GLIDE CLASSIC | | 1340 | 04-07 | DF680 | DF681 |
| FLHTCU ELECTRA GLIDE ULTRA CLASSIC | | 1340 | 00-07 | DF680 | DF681 |
| FLTR/i ROAD GLIDE | | 1340 | 00-07 | DF680 | DF681 |
| FLHX/i STREET GLIDE | | 1450 | 06-07 | DF680 | DF681 |

**DF 682 W** — øext. 292 mm øint. 50,5 — 5,0 — OE

| BRAND MARCA | MODEL MODELO | C.C. | YEAR | FRONT | REAR |
|---|---|---|---|---|---|
| **HARLEY DAVIDSON** | | | | | |
| FXST/i SOFTAIL STANDARD | | 1340 | 00-05 | DF680 | DF682 |

**DF 690 CW** — øext. 310 mm øint. 64 — 5,0 — 22,5 — OE

**DF 690 CRWi-D** — øext. 310 mm øint. 64 — 5,0 — 22,5

| BRAND MARCA | MODEL MODELO | C.C. | YEAR | FRONT | REAR |
|---|---|---|---|---|---|
| **SUZUKI** | | | | | |
| GSX R 750 L, LM, W | | 750 | 91-93 | DF690 | DF307 |
| GSX R 750 W | | 750 | 94-95 | DF690 | DF307 |
| RF 900 RS2 | | 900 | 96- | DF690 | DF307 |
| GSX R 1100 W | | 1100 | 93- | DF690 | DF307 |



**OE:** Original equipment (original replacement disc) - **OE:** Equipo original (disco de remplazo del original) For other models years previous to 1990 visit **www.galferonline.es** - Para otros modelos anteriores al año 1990 visitar **www.galferonline.es**
For consult TÜV (ABE) type approvals visit **www.galfermoto.com --> DOWNLOAD --> TÜV CERTIFICATIONS** - Para consultar las homologaciones TÜV (ABE) visitar **www.galfermoto.com --> DESCARGAS --> CERTIFICACIONES TÜV**

## DF 692 CW

øext. 310 mm øint. 58 | 5,0 | 17,0 | OE

| BRAND MARCA | MODEL MODELO | C.C. | YEAR | FRONT | REAR |
|---|---|---|---|---|---|
| **HONDA** | | | | | |
| CB 1000 BIG ONE | | 1000 | 93- | DF692 | DF040 |
| CB 1000 SF | | 1000 | 93- | DF692 | DF040 |

## DF 701 W

øext. 276 mm øint. 174 | 5,0 | OE

| BRAND MARCA | MODEL MODELO | C.C. | YEAR | FRONT | REAR |
|---|---|---|---|---|---|
| **BMW** | | | | | |
| R 850 R | | 850 | 04- | DF707 | DF701 |
| R 850 R ROADSTER | | 850 | 95-00 | DF631 | DF701 |
| R 850 R ROADSTER | | 850 | 01- | DF631 | DF701 |
| R 850 RT | | 850 | 06- | DF707 | DF701 |
| R 100 GS/ABS, R, RS | | 1000 | 95- | DF702 | DF701 |
| R 100 R CLASSIC, MYSTIC | | 1000 | 95- | | DF701 |
| R 1100 GS ABS | | 1100 | 94- | DF702 | DF701 |
| R 1100 GS NO ABS | | 1100 | 94- | DF702 | DF701 |
| R 1100 R ROADSTER | | 1100 | 95- | DF631 | DF701 |
| R 1100 RS NO ABS | | 1100 | 95- | DF631 | DF701 |
| R 1100 RT ABS | | 1100 | 94-01 | DF631 | DF701 |
| R 1100 RT NO ABS | | 1100 | 94-01 | DF631 | DF701 |
| R 1100 S NO ABS | | 1100 | 98-00 | DF702 | DF701 |
| R 1100 S | | 1100 | 01- | DF707 | DF701 |
| R 1100 S ABS | | 1100 | 01- | DF707 | DF701 |
| R 1150 GS ABS | | 1150 | 00-01 | DF702 | DF701 |
| R 1150 GS | | 1150 | 02- | DF702 | DF701 |
| R 1150 GS ADVENTURE | | 1150 | 03- | DF707 | DF701 |
| R 1150 R ROCKESTER | | 1150 | 03- | DF707 | DF701 |
| R 1150 R ROADSTER | | 1150 | 01- | DF707 | DF701 |
| R 1150 RS | | 1150 | 01- | DF707 | DF701 |
| R 1150 RT | | 1150 | 01- | DF707 | DF701 |
| K 1200 GT | | 1200 | 02-05 | DF707 | DF701 |
| K 1200 RS ABS | | 1200 | 97-00 | DF702 | DF701 |
| K 1200 RS | | 1200 | 01- | DF707 | DF701 |
| K 1200 RT | | 1200 | 06- | DF707 | DF701 |
| R 1200 CRUISER | | 1200 | 97- | DF702 | DF701 |
| R 1200 C AVANTGARDE | | 1200 | 00- | DF702 | DF701 |
| R 1200 C INDEPENDENT | | 1200 | 01- | DF702 | DF701 |

## DF 702 W

øext. 305 mm øint. 181 | 4,5 | OE | INCLUDE PINS

| BRAND MARCA | MODEL MODELO | C.C. | YEAR | FRONT | REAR |
|---|---|---|---|---|---|
| **BMW** | | | | | |
| R 100 GS/ABS, R, RS | | 1000 | 95- | DF702 | DF701 |
| R 1100 GS ABS | | 1100 | 94- | DF702 | DF701 |
| R 1100 GS NO ABS | | 1100 | 94- | DF702 | DF701 |
| R 1100 S NO ABS | | 1100 | 98-00 | DF702 | DF701 |
| HP 2 ENDURO | | 1150 | 05- | DF702 | DF763 |
| R 1150 GS ABS | | 1150 | 00-01 | DF702 | DF701 |
| R 1150 GS | | 1150 | 02- | DF702 | DF701 |
| K 1200 LT | | 1200 | 97-00 | DF702 | |
| K 1200 RS ABS | | 1200 | 97-00 | DF702 | DF701 |
| R 1200 CRUISER | | 1200 | 97- | DF702 | DF701 |
| R 1200 C AVANTGARDE | | 1200 | 00- | DF702 | DF701 |
| R 1200 C INDEPENDENT | | 1200 | 01- | DF702 | DF701 |
| R 1200 C MONTAUK | | 1200 | 04- | DF702 | |
| R 1200 GS | | 1200 | 04-08 | DF702 | DF763 |
| R 1200 GS | | 1200 | 09- | DF702 | DF763 |
| R 1200 GS LC | | 1200 | 13- | DF702 | DF720 |
| R 1200 GS ADVENTURE | | 1200 | 06-08 | DF702 | DF763 |
| R 1200 GS ADVENTURE | | 1200 | 09- | DF702 | DF763 |
| R 1200 GS LC ADVENTURE | | 1200 | 13- | DF702 | DF720 |

## DF 703 W

øext. 240 mm øint. 110 | 5,0 | OE

| BRAND MARCA | MODEL MODELO | C.C. | YEAR | FRONT | REAR |
|---|---|---|---|---|---|
| **APRILIA** | | | | | |
| PEGASO 650 ie | | 650 | 01-06 | DF663 | DF703 |
| PEGASO 650 ie | | 650 | 07- | DF660 | DF703 |
| PEGASO 650 ie FACTORY | | 650 | 06-08 | DF660 | DF703 |
| PEGASO 650 STRADA | | 650 | 05- | DF660 | DF703 |
| **BENELLI** | | | | | |
| CENTURY RACER 899 | | 900 | 11- | DF660 | DF703 |
| TRE-K 899 | | 900 | 09- | DF660 | DF703 |
| TNT 1130 | | 1130 | 04- | DF660 | DF703 |
| TNT CAFÉ RACER | | 1130 | 06- | DF660 | DF703 |
| TNT R 160 | | 1130 | 10- | DF660 | DF703 |
| TNT TITANIUM | | 1130 | 06- | DF660 | DF703 |
| **BMW** | | | | | |
| F 650 | | 650 | 93- | DF663 | DF703 |
| F 650 CS SCARVER | | 650 | 01- | DF663 | DF703 |
| F 650 DAKAR | | 650 | 00-01 | DF663 | DF703 |
| F 650 GS | | 650 | 00- | DF663 | DF703 |
| F 650 ST | | 650 | 97- | DF663 | DF703 |
| G 650 GS | | 650 | 09- | DF663 | DF703 |
| G 650 XCOUNTRY | | 650 | 07- | DF663 | DF703 |
| G 650 XMOTO | | 650 | 07- | DF883 | DF703 |
| **HUSQVARNA** | | | | | |
| TR 650 STRADA | | 650 | 12- | DF663 | DF703 |
| TR 650 TERRA | | 650 | 12- | DF663 | DF703 |
| **KTM** | | | | | |
| 950 ADVENTURE S | | 950 | 03- | DF672 | DF703 |

## DF 704 W / DF 704 FLW

øext. 220 mm øint. 105 | 4,0 | OE

| BRAND MARCA | MODEL MODELO | C.C. | YEAR | FRONT | REAR |
|---|---|---|---|---|---|
| **PIAGGIO** | | | | | |
| LIBERTY 4-T | | 150 | 00- | DF704 | - |
| VESPA SUPER SPORT ABS | | 150 | 15- | DF704 | |
| SUPER HEXAGON GTX 180 (G) | | 180 | 01- | | DF704 |
| SUPER HEXAGON GTX 180 (H) | | 180 | 01- | | DF704 |
| VESPA GRAN TURISMO (G) | | 200 | 03- | DF704 | DF704 |
| VESPA GRAN TURISMO (H) | | 200 | 03- | DF704 | DF704 |
| VESPA GTE 250 I | | 250 | 05- | DF704 | DF704 |
| VESPA GTS 300 i.e. SUPER | | 300 | 09- | DF704 | DF704 |

## DF 706 W

øext. 240 mm øint. 107 | 4,0 | OE

| BRAND MARCA | MODEL MODELO | C.C. | YEAR | FRONT | REAR |
|---|---|---|---|---|---|
| **DUCATI** | | | | | |
| 749 | | 749 | 03- | DF880 | DF706 |
| 749 S/R | | 749 | 03- | DF880 | DF706 |
| DESMOSEDICI RR | | 989 | 07- | DF880 | DF706 |
| 999 R | | 999 | 03- | DF880 | DF706 |
| 999 S | | 999 | 03- | DF880 | DF706 |

## DF 707 W

øext. 320 mm øint. 181 | 4,5 | OE | INCLUDE PINS

| BRAND MARCA | MODEL MODELO | C.C. | YEAR | FRONT | REAR |
|---|---|---|---|---|---|
| **BMW** | | | | | |
| F 800 GT | | 800 | 13- | DF707 | DF763 |
| F 800 R | | 800 | 09-14 | DF707 | DF763 |
| F 800 R | | 800 | 15- | DF707 | DF763 |
| F 800 S | | 800 | 06- | DF707 | DF763 |
| F 800 ST | | 800 | 06- | DF707 | DF763 |
| R 850 R | | 850 | 04- | DF707 | DF701 |
| R 850 RT | | 850 | 06- | DF707 | DF701 |
| R 1100 S | | 1100 | 01- | DF707 | DF701 |
| R 1100 S ABS | | 1100 | 01- | DF707 | DF701 |
| HP 2 SM | | 1150 | 06-06 | DF707 | DF763 |
| HP 2 SPORT | | 1150 | 08- | DF707 | DF763 |
| HP 2 MEGAMOTO | | 1150 | 07- | DF707 | DF763 |
| R 1150 GS ADVENTURE | | 1150 | 03- | DF707 | DF701 |
| R 1150 R ROCKESTER | | 1150 | 03- | DF707 | DF701 |
| R 1150 R ROADSTER | | 1150 | 01- | DF707 | DF701 |
| R 1150 RS | | 1150 | 01- | DF707 | DF701 |
| R 1150 RT | | 1150 | 01- | DF707 | DF701 |
| K 1200 GT | | 1200 | 02-05 | DF707 | DF701 |
| K 1200 GT DER/RIGHT | | 1200 | 06- | DF707 | |
| K 1200 GT IZQ/LEFT | | 1200 | 06- | DF707 | |
| K 1200 LT | | 1200 | 01-08 | DF707 | |
| K 1200 LT | | 1200 | 09- | DF707 | |
| K 1200 RS | | 1200 | 01- | DF707 | DF701 |
| K 1200 R | | 1200 | 05- | DF707 | DF763 |
| K 1200 R SPORT | | 1200 | 07- | DF707 | DF763 |
| K 1200 RT | | 1200 | 06- | DF707 | DF701 |
| K 1200 S | | 1200 | 04- | DF707 | DF763 |
| K 1200 ST | | 1200 | 06-08 | DF707 | |
| K 1200 ST | | 1200 | 09- | DF707 | |
| R 1200 R | | 1200 | 06-08 | DF707 | DF763 |
| R 1200 R | | 1200 | 09-14 | DF707 | DF763 |
| R 1200 R | | 1200 | 15- | DF707 | DF763 |
| R 1200 R NINE T | | 1200 | 14- | DF707 | DF763 |
| R 1200 RT | | 1200 | 05- | DF707 | DF763 |
| R 1200 RT SE | | 1200 | 10- | DF707 | DF763 |
| R 1200 RT LC | | 1200 | 14- | DF707 | DF720 |
| R 1200 RS | | 1200 | 15- | DF707 | DF720 |
| R 1200 S | | 1200 | 06-08 | DF707 | DF763 |
| R 1200 S | | 1200 | 09- | DF707 | DF763 |
| R 1200 ST | | 1200 | 05-08 | DF707 | DF763 |
| R 1200 ST | | 1200 | 09- | DF707 | DF763 |
| K 1300 GT | | 1300 | 09- | DF707 | DF763 |
| K 1300 R | | 1300 | 09- | DF707 | DF763 |
| K 1300 S | | 1300 | 09- | DF707 | DF763 |
| K 1300 S MOTOR SPORT | | 1300 | 15- | DF707 | DF763 |
| K 1600 GT | | 1600 | 11- | DF707 | |
| K 1600 GT SE | | 1600 | 12- | DF707 | |
| K 1600 GTL | | 1600 | 11- | DF707 | |
| K 1600 GTL E | | 1600 | 12- | DF707 | |
| **HUSQVARNA** | | | | | |
| NUDA 900 | | 900 | 12- | DF707 | DF763 |
| NUDA 900 R | | 900 | 11- | DF707 | DF763 |

## DF 714 W

øext. 240 mm øint. 105 | 4,0 | OE

| BRAND MARCA | MODEL MODELO | C.C. | YEAR | FRONT | REAR |
|---|---|---|---|---|---|
| **GILERA-PIAGGIO** | | | | | |
| FUOCO 500 i.e. | | 500 | 07- | DF714 | DF666 |
| **PIAGGIO** | | | | | |
| MP 3 250 | | 250 | 06-08 | DF714 | DF666 |
| MP 3 250 LT | | 250 | 09- | DF714 | DF666 |
| MP 3 300 LT SPORT | | 300 | 11- | DF714 | DF666 |
| MP 3 300 YOURBAN | | 300 | 11- | DF714 | DF666 |
| MP 3 300 ie YOURBAN | | 300 | 13- | DF714 | DF666 |

| | | | | |
|---|---|---|---|---|
| MP 3 400 i.e. | 400 | 07- | DF714 | DF666 |
| MP 3 400 LT | 400 | 09- | DF714 | DF666 |
| MP 3 500 SPORT | 500 | 10- | DF714 | DF666 |

## DF 720 W

øext. 276 mm øint. 136,5 — 5,0 — OE

| BRAND MARCA | MODEL MODELO | C.C. | YEAR | FRONT | REAR |
|---|---|---|---|---|---|
| **BMW** | | | | | |
| R 1200 GS LC | | 1200 | 13- | DF702 | DF720 |
| R 1200 GS LC ADVENTURE | | 1200 | 13- | DF702 | DF720 |
| R 1200 RT LC | | 1200 | 14- | DF707 | DF720 |
| R 1200 RS | | 1200 | 15- | DF707 | DF720 |

## DF 736 W

øext. 255 mm øint. 115 — 5,0 — OE

| BRAND MARCA | MODEL MODELO | C.C. | YEAR | FRONT | REAR |
|---|---|---|---|---|---|
| **BENELLI** | | | | | |
| SPORT TORNADO NAKED TRE | | 1130 | 06- | DF881 | DF736 |
| TREK AMAZONAS | | 1130 | 07- | DF881 | DF736 |
| TORNADO TRE 1130 | | 1130 | 06- | DF881 | DF736 |

## DF 737 W

øext. 220 mm øint. 58 — 4,0 — OE

| BRAND MARCA | MODEL MODELO | C.C. | YEAR | FRONT | REAR |
|---|---|---|---|---|---|
| **BENELLI** | | | | | |
| ADIVA | | 150 | 00- | DF737 | |
| **DERBI** | | | | | |
| BOULERVARD | | 150 | 03- | DF737 | - |
| BOULERVARD | | 200 | 05- | DF737 | - |
| **GILERA-PIAGGIO** | | | | | |
| RUNNER 180 FXR (G) | | 180 | 98-98 | DF737 | - |
| RUNNER 180 FXR (H) | | 180 | 98-98 | DF737 | - |
| RUNNER 180 SP | | 180 | 99-00 | DF737 | DF666 |
| RUNNER 180 VXR (G) | | 180 | 01- | DF737 | DF666 |
| RUNNER 180 VXR (H) | | 180 | 01- | DF737 | DF666 |
| RUNNER 200 VXR | | 200 | 02-05 | DF737 | |
| **PIAGGIO** | | | | | |
| SKIPPER LX (G) | | 150 | 98-99 | DF737 | - |
| SKIPPER LX (H) | | 150 | 98-99 | DF737 | - |
| SKR 150 ST 4T (G) | | 150 | 00- | DF737 | - |
| SKR 150 ST 4T (H) | | 150 | 00- | DF737 | - |

## DF 755 CWI-D

øext. 320 mm øint. 179 — 5,0 — OE

| BRAND MARCA | MODEL MODELO | C.C. | YEAR | FRONT | REAR |
|---|---|---|---|---|---|
| **BMW** | | | | | |
| S 1000 R NAKED | | 1000 | 14- | DF755 | DF756 |
| S 1000 RR | | 1000 | 09-14 | DF755 | DF756 |
| S 1000 RR ABS | | 1000 | 09-14 | DF755 | DF756 |
| S 1000 RR | | 1000 | 15- | DF755 | DF756 |
| S 1000 RR ABS | | 1000 | 15- | DF755 | DF756 |
| S 1000 RX | | 1000 | 15- | DF755 | DF763 |

## DF 756 W

øext. 220 mm øint. 120 — 5,0 — OE

| BRAND MARCA | MODEL MODELO | C.C. | YEAR | FRONT | REAR |
|---|---|---|---|---|---|
| **BMW** | | | | | |
| HP 4 | | 1000 | 12- | DF817 | DF756 |
| S 1000 R NAKED | | 1000 | 14- | DF755 | DF756 |
| S 1000 RR | | 1000 | 09-14 | DF755 | DF756 |
| S 1000 RR ABS | | 1000 | 09-14 | DF755 | DF756 |
| S 1000 RR | | 1000 | 15- | DF755 | DF756 |
| S 1000 RR ABS | | 1000 | 15- | DF755 | DF756 |

## DF 763 W

øext. 265 mm øint. 136 — 5,0 — OE

| BRAND MARCA | MODEL MODELO | C.C. | YEAR | FRONT | REAR |
|---|---|---|---|---|---|
| **BMW** | | | | | |
| F 650 GS BICILINDRICO | | 650 | 07- | DF663 | DF763 |
| F 700 GS | | 700 | 13- | DF664 | DF763 |
| F 800 GS | | 800 | 08- | DF664 | DF763 |
| F 800 GT | | 800 | 13- | DF707 | DF763 |
| F 800 R | | 800 | 09-14 | DF707 | DF763 |
| F 800 R | | 800 | 15- | DF707 | DF763 |
| F 800 S | | 800 | 06- | DF707 | DF763 |
| F 800 ST | | 800 | 06- | DF707 | DF763 |
| S 1000 RX | | 1000 | 15- | DF755 | DF763 |
| HP 2 ENDURO | | 1150 | 05- | DF702 | DF763 |
| HP 2 SM | | 1150 | 06-06 | DF707 | DF763 |
| HP 2 SPORT | | 1150 | 08- | DF707 | DF763 |
| HP 2 MEGAMOTO | | 1150 | 07- | DF707 | DF763 |
| K 1200 R | | 1200 | 05- | DF707 | DF763 |
| K 1200 R SPORT | | 1200 | 07- | DF707 | DF763 |
| K 1200 S | | 1200 | 04- | DF707 | DF763 |
| R 1200 GS | | 1200 | 04-08 | DF702 | DF763 |
| R 1200 GS | | 1200 | 09- | DF702 | DF763 |
| R 1200 GS ADVENTURE | | 1200 | 06-08 | DF702 | DF763 |
| R 1200 GS ADVENTURE | | 1200 | 09- | DF702 | DF763 |
| R 1200 R | | 1200 | 06-08 | DF707 | DF763 |
| R 1200 R | | 1200 | 09-14 | DF707 | DF763 |
| R 1200 R | | 1200 | 15- | DF707 | DF763 |
| R 1200 R NINE T | | 1200 | 14- | DF707 | DF763 |
| R 1200 RT | | 1200 | 05- | DF707 | DF763 |
| R 1200 RT SE | | 1200 | 10- | DF707 | DF763 |
| R 1200 S | | 1200 | 06-08 | DF707 | DF763 |
| R 1200 S | | 1200 | 09- | DF707 | DF763 |
| R 1200 ST | | 1200 | 05-08 | DF707 | DF763 |
| R 1200 ST | | 1200 | 09- | DF707 | DF763 |
| K 1300 GT | | 1300 | 09- | DF707 | DF763 |
| K 1300 R | | 1300 | 09- | DF707 | DF763 |
| K 1300 S | | 1300 | 09- | DF707 | DF763 |
| K 1300 S MOTOR SPORT | | 1300 | 15- | DF707 | DF763 |
| **HUSQVARNA** | | | | | |
| NUDA 900 | | 900 | 12- | DF707 | DF763 |
| NUDA 900 R | | 900 | 11- | DF707 | DF763 |

## DF 765 CW

øext. 310 mm øint. 80 — 5,0 / 10,0 — OE

| BRAND MARCA | MODEL MODELO | C.C. | YEAR | FRONT | REAR |
|---|---|---|---|---|---|
| **MV AGUSTA** | | | | | |
| BRUTALE AMERICA | | 750 | 06- | DF765 | DF766 |
| BRUTALE CRC | | 750 | 06- | DF765 | DF766 |
| BRUTALE MAMBA | | 750 | 06- | DF765 | DF766 |
| BRUTALE S/ORO | | 750 | 02- | DF765 | DF766 |
| F-4 | | 750 | 99- | DF765 | DF766 |
| BRUTALE 910 | | 910 | 06- | DF765 | DF766 |
| F-4 MAMBA | | 1000 | 06- | DF765 | DF766 |
| VELTRO 1 | | 1000 | 06- | DF765 | DF766 |

## DF 766 W

øext. 210 mm øint. 108 — 5,0 — OE

| BRAND MARCA | MODEL MODELO | C.C. | YEAR | FRONT | REAR |
|---|---|---|---|---|---|
| **MV AGUSTA** | | | | | |
| BRUTALE AMERICA | | 750 | 06- | DF765 | DF766 |
| BRUTALE CRC | | 750 | 06- | DF765 | DF766 |
| BRUTALE MAMBA | | 750 | 06- | DF765 | DF766 |
| BRUTALE S/ORO | | 750 | 02- | DF765 | DF766 |
| F-4 | | 750 | 99- | DF765 | DF766 |
| BRUTALE 910 | | 910 | 06- | DF765 | DF766 |
| F-4 MAMBA | | 1000 | 06- | DF765 | DF766 |
| VELTRO 1 | | 1000 | 06- | DF765 | DF766 |

## DF 768 W

øext. 320 mm øint. 176,5 — 4,5 — OE

| BRAND MARCA | MODEL MODELO | C.C. | YEAR | FRONT | REAR |
|---|---|---|---|---|---|
| **DUCATI** | | | | | |
| MULTISTRADA 1000 DS | | 1000 | 03- | DF768 | DF769 |
| MULTISTRADA 1000 S DS | | 1000 | 06- | DF768 | DF769 |
| MULTISTRADA 1100 DS | | 1100 | 07- | DF768 | DF769 |
| MULTISTRADA 1100 S DS | | 1100 | 07- | DF768 | DF769 |

## DF 769 W

øext. 245 mm øint. 108 — 5,0 — OE

| BRAND MARCA | MODEL MODELO | C.C. | YEAR | FRONT | REAR |
|---|---|---|---|---|---|
| **DUCATI** | | | | | |
| HYPERMOTARD | | 796 | 10- | DF773 | DF769 |
| MONSTER 796 | | 796 | 10- | DF807 | DF769 |
| MONSTER 796 ABS | | 796 | 10- | DF807 | DF769 |
| MONSTER 800 S2R | | 800 | 05- | DF870 | DF769 |
| HYPERMOTARD | | 821 | 13- | DF773 | DF769 |
| HYPERMOTARD SP | | 821 | 13- | DF773 | DF769 |
| HYPERSTRADA | | 821 | 13- | DF773 | DF769 |
| MONSTER 821 | | 821 | 14- | DF880 | DF769 |
| 848 | | 848 | 08- | DF880 | DF769 |
| 848 EVO | | 848 | 10- | DF880 | DF769 |
| 848 EVO CORSE SE | | 848 | 12- | DF880 | DF769 |
| 848 S | | 848 | 08- | DF880 | DF769 |
| 848 STREETFIGHTER | | 848 | 12- | DF880 | DF769 |
| 848 STREETFIGHTER EVO SP | | 848 | 12- | DF880 | DF769 |
| MONSTER S4R | | 996 | 03-05 | DF660 | DF769 |
| 1000 MONSTER S2R | | 1000 | 06- | DF660 | DF769 |
| 1000 MONSTER S4R | | 1000 | 03-05 | DF660 | DF769 |
| 1000 MONSTER S4Rs | | 1000 | 06- | DF880 | DF769 |
| MULTISTRADA 1000 DS | | 1000 | 03- | DF768 | DF769 |
| MULTISTRADA 1000 S DS | | 1000 | 06- | DF768 | DF769 |
| HYPERMOTARD | | 1100 | 07-09 | DF773 | DF769 |
| HYPERMOTARD EVO | | 1100 | 10- | DF773 | DF769 |
| HYPERMOTARD EVO SP | | 1100 | 10- | DF773 | DF769 |
| HYPERMOTARD S | | 1100 | 07-09 | DF773 | DF769 |
| MONSTER | | 1100 | 09- | DF807 | DF769 |
| MONSTER EVO | | 1100 | 11- | DF807 | DF769 |
| MONSTER S | | 1100 | 09- | DF880 | DF769 |
| MONSTER S (OHLINS) | | 1100 | 09- | DF880 | DF769 |
| MULTISTRADA 1100 DS | | 1100 | 07- | DF768 | DF769 |
| MULTISTRADA 1100 S DS | | 1100 | 07- | DF768 | DF769 |



**OE:** Original equipment (original replacement disc) - **OE:** Equipo original (disco de remplazo del original) For other models years previous to 1990 visit **www.galferonline.es** - Para otros modelos anteriores al año 1990 visitar **www.galferonline.es**
For consult TÜV (ABE) type approvals visit **www.galfermoto.com --> DOWNLOAD --> TÜV CERTIFICATIONS** - Para consultar las homologaciones TÜV (ABE) visitar **www.galfermoto.com --> DESCARGAS --> CERTIFICACIONES TÜV**

## DF 770 W

øext. 300 mm øint. 127 — 5,0 — OE

## DF 770 FLW

øext. 300 mm øint. 124,4 — 5,0 — OE

| BRAND MARCA | MODEL MODELO | C.C. | YEAR | FRONT | REAR |
|---|---|---|---|---|---|
| **KTM** | | | | | |
| | 950 R SUPER ENDURO | 950 | 06- | DF770 | |
| | 990 ADVENTURE / S | 990 | 06- | DF770 | DF782 |
| | 990 ADVENTURE / S ABS | 990 | 06- | DF770 | DF782 |
| | 990 R SUPER ENDURO | 990 | 06- | DF770 | DF782 |

## DF 771 W

øext. 240 mm øint. 109 — 4,0 — OE

| BRAND MARCA | MODEL MODELO | C.C. | YEAR | FRONT | REAR |
|---|---|---|---|---|---|
| **KTM** | | | | | |
| | 690 SM /PRESTIGE | 690 | 07- | DF660 | DF771 |
| | 690 SMC R | 690 | 13- | DF672 | DF771 |
| | 690 SMC R ABS | 690 | 13- | DF672 | DF771 |

## DF 773 CW

øext. 305 mm øint. 72 — 4,5 9,75 — OE

| BRAND MARCA | MODEL MODELO | C.C. | YEAR | FRONT | REAR |
|---|---|---|---|---|---|
| **DUCATI** | | | | | |
| | HYPERMOTARD | 796 | 10- | DF773 | DF769 |
| | HYPERMOTARD | 821 | 13- | DF773 | DF769 |
| | HYPERMOTARD SP | 821 | 13- | DF773 | DF769 |
| | HYPERSTRADA | 821 | 13- | DF773 | DF769 |
| | HYPERMOTARD | 1100 | 07-09 | DF773 | DF769 |
| | HYPERMOTARD EVO | 1100 | 10- | DF773 | DF769 |
| | HYPERMOTARD EVO SP | 1100 | 10- | DF773 | DF769 |
| | HYPERMOTARD S | 1100 | 07-09 | DF773 | DF769 |

## DF 774 CWI-D

øext. 330 mm øint. 72 — 5,0 15,0 — OE

## DF 774 CRWI-D

øext. 330 mm øint. 72 — 5,0 15,0

| BRAND MARCA | MODEL MODELO | C.C. | YEAR | FRONT | REAR |
|---|---|---|---|---|---|
| **DUCATI** | | | | | |
| | 1098 | 1100 | 07-08 | DF774 | DF775 |
| | 1098 S | 1100 | 07-08 | DF774 | DF775 |
| | STREETFIGHTER | 1100 | 09- | DF774 | DF775 |
| | STREETFIGHTER S | 1100 | 09- | DF774 | DF775 |
| | 1198 | 1198 | 10- | DF774 | DF775 |
| | 1198 R SP | 1198 | 09- | DF774 | DF775 |
| | 1198 S | 1198 | 09- | DF774 | DF775 |
| | 1199 PANIGALE | 1199 | 12- | DF774 | DF839 |
| | 1199 PANIGALE RS13 | 1199 | 13- | DF774 | DF839 |
| | 1199 PANIGALE SUPERLEGGERA | 1199 | 14- | DF774 | DF839 |
| | MONSTER 1200 S | 1200 | 14- | DF774 | DF775 |
| | MULTISTRADA 1200 S | 1200 | 15- | DF774 | DF812 |
| | MULTISTRADA 1200 S D air | 1200 | 15- | DF774 | DF812 |
| | 1299 PANIGALE | 1299 | 15- | DF774 | DF839 |
| | 1299 PANIGALE R | 1299 | 15- | DF774 | DF839 |
| | 1299 PANIGALE S | 1299 | 15- | DF774 | DF839 |

## DF 775 W

øext. 245 mm øint. 83 — 5,0 — OE

| BRAND MARCA | MODEL MODELO | C.C. | YEAR | FRONT | REAR |
|---|---|---|---|---|---|
| **DUCATI** | | | | | |
| | 1098 | 1100 | 07-08 | DF774 | DF775 |
| | 1098 S | 1100 | 07-08 | DF774 | DF775 |
| | STREETFIGHTER | 1100 | 09- | DF774 | DF775 |
| | STREETFIGHTER S | 1100 | 09- | DF774 | DF775 |
| | 1198 | 1198 | 10- | DF774 | DF775 |
| | 1198 R SP | 1198 | 09- | DF774 | DF775 |
| | 1198 S | 1198 | 09- | DF774 | DF775 |
| | MONSTER 1200 | 1200 | 14- | DF807 | DF775 |
| | MONSTER 1200 S | 1200 | 14- | DF774 | DF775 |
| | MULTISTRADA 1200 | 1200 | 10-14 | DF807 | DF775 |
| | MULTISTRADA 1200 PIKES PEAK | 1200 | 13-14 | DF807 | DF775 |
| | MULTISTRADA 1200 S GRAN TURISMO | 1200 | 13-14 | DF807 | DF775 |
| | MULTISTRADA 1200 SS | 1200 | 10-14 | DF807 | DF775 |
| | MULTISTRADA 1200 ST | 1200 | 10-14 | DF807 | DF775 |

## DF 782 FLW

øext. 240 mm øint. 110 — 5,0 — OE

| BRAND MARCA | MODEL MODELO | C.C. | YEAR | FRONT | REAR |
|---|---|---|---|---|---|
| **KTM** | | | | | |
| | 690 SM | 690 | 07- | DF672 | DF782 |
| | 690 SMC | 690 | 08- | DF606 | DF782 |
| | 950 SUPERMOTO R | 950 | 07- | DF783 | DF782 |
| | 990 ADVENTURE R | 990 | 09- | DF672 | DF782 |
| | 990 ADVENTURE / S | 990 | 06- | DF770 | DF782 |
| | 990 ADVENTURE / S ABS | 990 | 06- | DF770 | DF782 |
| | 990 R SUPER ENDURO | 990 | 06- | DF770 | DF782 |

## DF 783 CWI-D

øext. 320 mm øint. 64 — 5,0 10,0 — OE

## DF 783 CRW

øext. 320 mm øint. 64 — 5,0 10,0

| BRAND MARCA | MODEL MODELO | C.C. | YEAR | FRONT | REAR |
|---|---|---|---|---|---|
| **KTM** | | | | | |
| | 690 DUKE | 690 | 08- | DF783 | DF798 |
| | 690 DUKE III R | 690 | 10- | DF783 | DF798 |
| | 690 DUKE | 690 | 12- | DF783 | DF798 |
| | 690 SMR | 690 | 07- | DF783 | DF798 |
| | 950 SUPERMOTO R | 950 | 07- | DF783 | DF782 |
| | SUPER DUKE | 950 | 05- | DF783 | |
| | 1050 ADVENTURE | 1050 | 15- | DF783 | DF793 |
| | 1190 ADVENTURE | 1190 | 13- | DF783 | DF793 |
| | 1190 ADVENTURE R | 1190 | 13- | DF783 | DF793 |
| | RC 8 | 1190 | 08- | DF783 | DF784 |
| | RC 8 R | 1190 | 09- | DF783 | DF784 |
| | 1290 SUPER ADVENTURE | 1290 | 15- | DF783 | DF793 |

## DF 784 W

øext. 220 mm øint. 88,7 — 5,0 — OE

## DF 784 FLW

øext. 220 mm øint. 88,7 — 5,0 — OE

| BRAND MARCA | MODEL MODELO | C.C. | YEAR | FRONT | REAR |
|---|---|---|---|---|---|
| **KTM** | | | | | |
| | RC 8 | 1190 | 08- | DF783 | DF784 |
| | RC 8 R | 1190 | 09- | DF783 | DF784 |

## DF 786 FLW

øext. 240 mm øint. 107 — 5,0 — OE

| BRAND MARCA | MODEL MODELO | C.C. | YEAR | FRONT | REAR |
|---|---|---|---|---|---|
| **KTM** | | | | | |
| | SUPERMOTO 950 | 950 | 05- | | DF786 |
| | 990 SM R | 990 | 09- | | DF786 |
| | 990 SM T | 990 | 09- | | DF786 |
| | 990 SM T ABS | 990 | 11- | | DF786 |
| | 990 SUPER DUKE | 990 | 06- | DF883 | DF786 |
| | 990 SUPERMOTO / R | 990 | 08-09 | | DF786 |
| | 990 SUPERMOTO / R | 990 | 10- | | DF786 |

## DF 787 CWI-D

øext. 320 mm øint. 52 — 5,0 — OE

| BRAND MARCA | MODEL MODELO | C.C. | YEAR | FRONT | REAR |
|---|---|---|---|---|---|
| **KTM** | | | | | |
| | 690 DUKE R | 690 | 13- | DF787 | DF798 |

## DF 788 W

øext. 240 mm øint. 86 — 5,0 — OE

| BRAND MARCA | MODEL MODELO | C.C. | YEAR | FRONT | REAR |
|---|---|---|---|---|---|
| **KTM** | | | | | |
| | 1290 SUPER DUKE R | 1290 | 13- | DF843 | DF788 |

## DF 789 CW

øext. 280 mm øint. 60 — 4,0 — OE

| BRAND MARCA | MODEL MODELO | C.C. | YEAR | FRONT | REAR |
|---|---|---|---|---|---|
| **KTM** | | | | | |
| | 200 DUKE | 200 | 12- | DF789 | DF790 |
| | RC 200 | 200 | 14- | DF789 | DF790 |
| | 390 DUKE | 390 | 13- | DF789 | DF790 |

## DF 790 W

øext. 230 mm øint. 104 — 4,0 — OE

| BRAND MARCA | MODEL MODELO | C.C. | YEAR | FRONT | REAR |
|---|---|---|---|---|---|
| KTM | | | | | |
| 200 DUKE | | 200 | 12- | DF789 | DF790 |
| 200 DUKE ABS | | 200 | 14- | DF800 | DF790 |
| RC 200 | | 200 | 14- | DF789 | DF790 |
| 390 DUKE | | 390 | 13- | DF789 | DF790 |
| 390 DUKE ABS | | 390 | 14- | DF800 | DF790 |
| RC 390 | | 390 | 14- | DF800 | DF790 |

## DF 793 FLW

øext. 267 mm øint. 110 — 5,0 — OE

| BRAND MARCA | MODEL MODELO | C.C. | YEAR | FRONT | REAR |
|---|---|---|---|---|---|
| KTM | | | | | |
| 1050 ADVENTURE | | 1050 | 15- | DF783 | DF793 |
| 1190 ADVENTURE | | 1190 | 13- | DF783 | DF793 |
| 1190 ADVENTURE R | | 1190 | 13- | DF783 | DF793 |
| 1290 SUPER ADVENTURE | | 1290 | 15- | DF783 | DF793 |

## DF 798 W

øext. 240 mm øint. 107 — 4,0 — OE

| BRAND MARCA | MODEL MODELO | C.C. | YEAR | FRONT | REAR |
|---|---|---|---|---|---|
| KTM | | | | | |
| 690 DUKE | | 690 | 08- | DF783 | DF798 |
| 690 DUKE III R | | 690 | 10- | DF783 | DF798 |
| 690 DUKE | | 690 | 12- | DF783 | DF798 |
| 690 DUKE R | | 690 | 13- | DF787 | DF798 |
| 690 SMR | | 690 | 07- | DF783 | DF798 |

## DF 800 CW

øext. 300 mm øint. 60 — 5,0 — OE

| BRAND MARCA | MODEL MODELO | C.C. | YEAR | FRONT | REAR |
|---|---|---|---|---|---|
| KTM | | | | | |
| 200 DUKE ABS | | 200 | 14- | DF800 | DF790 |
| 390 DUKE ABS | | 390 | 14- | DF800 | DF790 |
| RC 390 | | 390 | 14- | DF800 | DF790 |

## DF 807 CW

øext. 320 mm øint. 72 — 4,5 — 9,75 — OE

## DF 807 CRWI-D

øext. 320 mm øint. 72 — 4,5 — 9,75

| BRAND MARCA | MODEL MODELO | C.C. | YEAR | FRONT | REAR |
|---|---|---|---|---|---|
| DUCATI | | | | | |
| MONSTER 796 | | 796 | 10- | DF807 | DF769 |
| MONSTER 796 ABS | | 796 | 10- | DF807 | DF769 |
| MONSTER | | 1100 | 09- | DF807 | DF769 |
| MONSTER EVO | | 1100 | 11- | DF807 | DF769 |
| DIAVEL 1200 | | 1200 | 11- | DF807 | DF812 |
| DIAVEL STRADA 1200 | | 1200 | 13- | DF807 | DF812 |
| MONSTER 1200 | | 1200 | 14- | DF807 | DF775 |
| MULTISTRADA 1200 | | 1200 | 10-14 | DF807 | DF775 |
| MULTISTRADA 1200 | | 1200 | 15- | DF807 | DF812 |
| MULTISTRADA 1200 PIKES PEAK | | 1200 | 13-14 | DF807 | DF775 |
| MULTISTRADA 1200 S GRAN TURISMO | | 1200 | 13-14 | DF807 | DF775 |
| MULTISTRADA 1200 SS | | 1200 | 10-14 | DF807 | DF775 |
| MULTISTRADA 1200 ST | | 1200 | 10-14 | DF807 | DF775 |

## DF 812 W

øext. 265 mm øint. 83,5 — 6,0 — OE

| BRAND MARCA | MODEL MODELO | C.C. | YEAR | FRONT | REAR |
|---|---|---|---|---|---|
| DUCATI | | | | | |
| DIAVEL 1200 | | 1200 | 11- | DF807 | DF812 |
| DIAVEL STRADA 1200 | | 1200 | 13- | DF807 | DF812 |
| MULTISTRADA 1200 | | 1200 | 15- | DF807 | DF812 |
| MULTISTRADA 1200 S | | 1200 | 15- | DF774 | DF812 |
| MULTISTRADA 1200 S D air | | 1200 | 15- | DF774 | DF812 |

## DF 816 W

øext. 270 mm øint. 149,5 — 5,0 — OE

## DF 816 FLW

øext. 270 mm øint. 149,5 — 5,0 — OE

| BRAND MARCA | MODEL MODELO | C.C. | YEAR | FRONT | REAR |
|---|---|---|---|---|---|
| BMW | | | | | |
| C 600 SPORT | | 600 | 12- | DF816 | DF816 |
| C 650 GT | | 650 | 12- | DF816 | DF816 |

## DF 817 CWI-D

øext. 320 mm øint. 64 — 5,0 — OE

| BRAND MARCA | MODEL MODELO | C.C. | YEAR | FRONT | REAR |
|---|---|---|---|---|---|
| BMW | | | | | |
| HP 4 | | 1000 | 12- | DF817 | DF756 |

## DF 820 W

øext. 375 mm øint. 307,5 — 5,0 — OE

| BRAND MARCA | MODEL MODELO | C.C. | YEAR | FRONT | REAR |
|---|---|---|---|---|---|
| BUELL | | | | | |
| XB 9 R FIREBOLT F | | 984 | 02- | DF820 | |
| XB 9 S LIGHTNING F | | 984 | 03- | DF820 | |
| XB 9 SX CITYX | | 984 | 06- | DF820 | |
| XB 12 R FIREBOLT | | 1200 | 06- | DF820 | |
| XB 12 S LIGHTNING | | 1200 | 06- | DF820 | |
| XB 12 SS LIGHTNING LONG | | 1200 | 06- | DF820 | |
| XB 12 X ULYSSES | | 1200 | 06-08 | DF820 | |
| XB 12 XT ULYSSES | | 1200 | 09- | DF820 | |

## DF 821 PW

øext. 300 mm øint. 172 — 5,0 — OE

| BRAND MARCA | MODEL MODELO | C.C. | YEAR | FRONT | REAR |
|---|---|---|---|---|---|
| HARLEY DAVIDSON | | | | | |
| V-ROD (BREMBO CALIPER) | | 1185 | 06- | DF821 | DF822 |
| VRSCAW V-ROD | | 1185 | 07-07 | DF821 | DF822 |
| VRSCD NIGHT ROD | | 1185 | 05-08 | DF821 | DF822 |
| VRSCDX NIGHT ROD SPECIAL | | 1185 | 07- | DF821 | DF822 |
| VRSCF V-ROD MUSCLE | | 1185 | 08- | DF821 | DF822 |
| VRSCR STREET ROD | | 1185 | 05-07 | DF821 | DF822 |
| VRSCX V-ROD 10th ANNIVERSARY | | 1185 | 12- | DF821 | DF822 |

## DF 822 CW

øext. 300 mm øint. 101,5 — 5,6 — 6,3 — OE

| BRAND MARCA | MODEL MODELO | C.C. | YEAR | FRONT | REAR |
|---|---|---|---|---|---|
| HARLEY DAVIDSON | | | | | |
| V-ROD (BREMBO CALIPER) | | 1185 | 06- | DF821 | DF822 |
| VRSCAW V-ROD | | 1185 | 07-07 | DF821 | DF822 |
| VRSCD NIGHT ROD | | 1185 | 05-08 | DF821 | DF822 |
| VRSCDX NIGHT ROD SPECIAL | | 1185 | 07- | DF821 | DF822 |
| VRSCF V-ROD MUSCLE | | 1185 | 08- | DF821 | DF822 |
| VRSCR STREET ROD | | 1185 | 05-07 | DF821 | DF822 |
| VRSCX V-ROD | | 1185 | 07-07 | | DF822 |
| VRSCX V-ROD 10th ANNIVERSARY | | 1185 | 12- | DF821 | DF822 |

## DF 823 PW

øext. 292 mm øint. 172 — 5,0 — OE

| BRAND MARCA | MODEL MODELO | C.C. | YEAR | FRONT | REAR |
|---|---|---|---|---|---|
| HARLEY DAVIDSON | | | | | |
| V-ROD (HAYES CALIPER) | | 1185 | 02-05 | DF823 | |

## DF 826 CW

øext. 320 mm øint. 105 — 5,0 — 0,0 — SP — OE

## DF 826 CRWI-D

øext. 320 mm øint. 105 — 5,0 — 0,0 — SP

| BRAND MARCA | MODEL MODELO | C.C. | YEAR | FRONT | REAR |
|---|---|---|---|---|---|
| APRILIA | | | | | |
| SXV 550 | | 550 | 06- | DF826 | DF827 |

## DF 827 W

øext. 240 mm øint. 102 — 4,0 — OE

| BRAND MARCA | MODEL MODELO | C.C. | YEAR | FRONT | REAR |
|---|---|---|---|---|---|
| APRILIA | | | | | |
| SXV 550 | | 550 | 06- | DF826 | DF827 |



**OE:** Original equipment (original replacement disc) - **OE:** Equipo original (disco de remplazo del original) For other models years previous to 1990 visit **www.galferonline.es** - Para otros modelos anteriores al año 1990 visitar **www.galferonline.es**
For consult TÜV (ABE) type approvals visit **www.galfermoto.com --> DOWNLOAD --> TÜV CERTIFICATIONS** - Para consultar las homologaciones TÜV (ABE) visitar **www.galfermoto.com --> DESCARGAS --> CERTIFICACIONES TÜV**

## DF 828 W

øext. 270 mm øint. 70,5 — 3,0 — OE

## DF 828 FLW

øext. 270 mm øint. 70,5 — 3,0 — OE

| BRAND MARCA | MODEL MODELO | C.C. | YEAR | FRONT | REAR |
|---|---|---|---|---|---|
| TM | | | | | |
| SMX 660 F | | 660 | 04-14 | DF828 | DF829 |
| SMX 660 F | | 660 | 15 | DF828 | DF840 |

## DF 829 W

øext. 243 mm øint. 114 — 4,0

## DF 829 WLL

øext. 243 mm øint. 114 — 4,0

## DF 829 RW

øext. 243 mm øint. 114 — 4,0

| BRAND MARCA | MODEL MODELO | C.C. | YEAR | FRONT | REAR |
|---|---|---|---|---|---|
| TM | | | | | |
| SMM 530 F | | 530 | 14- | | DF829 |
| SMR 530 F | | 530 | 14- | | DF829 |
| SMX 530 F | | 530 | 10-14 | | DF829 |
| SMX 660 F | | 660 | 04-14 | DF828 | DF829 |

## DF 830 CW

øext. 320 mm øint. 80 — 5,0 — OE

| BRAND MARCA | MODEL MODELO | C.C. | YEAR | FRONT | REAR |
|---|---|---|---|---|---|
| MV AGUSTA | | | | | |
| BRUTALE 675 | | 675 | 12- | DF830 | DF831 |
| F3 675 | | 675 | 11- | DF830 | DF831 |
| BRUTALE 800 | | 800 | 13- | DF830 | DF831 |
| BRUTALE 800 RR | | 800 | 15- | DF830 | DF831 |
| DRAGSTER 800 RR | | 800 | 15- | DF830 | DF831 |
| RIVALE 800 | | 800 | 13- | DF830 | DF831 |

## DF 831 W

øext. 220 mm øint. 108 — 5,0 — OE

| BRAND MARCA | MODEL MODELO | C.C. | YEAR | FRONT | REAR |
|---|---|---|---|---|---|
| MV AGUSTA | | | | | |
| BRUTALE 675 | | 675 | 12- | DF830 | DF831 |
| F3 675 | | 675 | 11- | DF830 | DF831 |
| F3 675 SERIE ORO | | 675 | 12- | | DF831 |
| BRUTALE 800 | | 800 | 13- | DF830 | DF831 |
| BRUTALE 800 RR | | 800 | 15- | DF830 | DF831 |
| DRAGSTER 800 RR | | 800 | 15- | DF830 | DF831 |
| RIVALE 800 | | 800 | 13- | DF830 | DF831 |

## DF 835 CW

øext. 300 mm øint. 56 — 5,0 — OE

| BRAND MARCA | MODEL MODELO | C.C. | YEAR | FRONT | REAR |
|---|---|---|---|---|---|
| HARLEY DAVIDSON | | | | | |
| FXD SWITCHBACK | | 1450 | 12- | DF835 | |
| FLHTC/i ELECTRA GLIDE CLASSIC | | 1340 | 08- | DF835 | |
| FLHR ROAD KING | | 1450 | 08- | DF835 | |
| FLHRC ROAD KING CLASSIC | | 1450 | 08- | DF835 | |
| FLHT ELECTRA GLIDE STANDARD | | 1450 | 08- | DF835 | |
| FLHTC ELECTRA GLIDE CLASSIC | | 1450 | 08- | DF835 | |
| FLHTCU ULTRA CLASSIC ELECTRA GLIDE | | 1450 | 08-13 | DF835 | |
| FLHTK ELECTRA GLIDE ULTRA LTD | | 1450 | 10- | DF835 | |
| FLHX/i STREET GLIDE | | 1450 | 08-13 | DF835 | |
| FLTR ROAD GLIDE | | 1450 | 08- | DF835 | |
| FLTRU ROAD GLIDE ULTRA | | 1450 | 11- | DF835 | |
| FLTRX ROAD GLIDE CUSTOM | | 1450 | 10- | DF835 | |

## DF 838 W

øext. 300 mm øint. 138,5 — 5,0 — OE — INCLUDE PINS

| BRAND MARCA | MODEL MODELO | C.C. | YEAR | FRONT | REAR |
|---|---|---|---|---|---|
| HARLEY DAVIDSON | | | | | |
| FLHTCU ULTRA CLASSIC ELECTRA GLIDE | | 1450 | 14- | DF838 | |
| FLHTP ELECTRA GLIDE STD. POLICE | | 1450 | 14- | DF838 | |
| FLHX/i STREET GLIDE | | 1450 | 14- | DF838 | |

## DF 839 W

øext. 245 mm øint. 83 — 5,0 — OE

| BRAND MARCA | MODEL MODELO | C.C. | YEAR | FRONT | REAR |
|---|---|---|---|---|---|
| DUCATI | | | | | |
| 1199 PANIGALE | | 1199 | 12- | DF774 | DF839 |
| 1199 PANIGALE RS13 | | 1199 | 13- | DF774 | DF839 |
| 1199 PANIGALE SUPERLEGGERA | | 1199 | 14- | DF774 | DF839 |
| 1299 PANIGALE | | 1299 | 15- | DF774 | DF839 |
| 1299 PANIGALE R | | 1299 | 15- | DF774 | DF839 |
| 1299 PANIGALE S | | 1299 | 15- | DF774 | DF839 |

## DF 840 W

øext. 240 mm øint. 114 — 4,0 — OE

| BRAND MARCA | MODEL MODELO | C.C. | YEAR | FRONT | REAR |
|---|---|---|---|---|---|
| TM | | | | | |
| SMX 660 F | | 660 | 15 | DF828 | DF840 |

## DF 843 CWI-D

øext. 320 mm øint. 64 — 5,0 — OE

| BRAND MARCA | MODEL MODELO | C.C. | YEAR | FRONT | REAR |
|---|---|---|---|---|---|
| KTM | | | | | |
| 1290 SUPER DUKE R | | 1290 | 13- | DF843 | DF788 |

## DF 864 W

øext. 226 mm øint. 58 — 4,0 — OE

| BRAND MARCA | MODEL MODELO | C.C. | YEAR | FRONT | REAR |
|---|---|---|---|---|---|
| PEUGEOT | | | | | |
| ELYSEO 150 | | 150 | 01- | DF864 | DF864 |

## DF 870 CW

øext. 300 mm øint. 64 — 4,5 / 0,0 — OE

| BRAND MARCA | MODEL MODELO | C.C. | YEAR | FRONT | REAR |
|---|---|---|---|---|---|
| DUCATI | | | | | |
| MONSTER 620 / DARK | | 620 | 05- | DF870 | DF636 |
| MULTISTRADA MTS 620 | | 620 | 05- | DF870 | DF636 |
| MONSTER 695 | | 695 | 06- | DF870 | DF636 |
| MONSTER 800 S2R | | 800 | 05- | DF870 | DF769 |

## DF 874 CW

øext. 320 mm øint. 144 — 5,0 — OE

| BRAND MARCA | MODEL MODELO | C.C. | YEAR | FRONT | REAR |
|---|---|---|---|---|---|
| TRIUMPH | | | | | |
| THRUXTON 865 | | 865 | 04-07 | DF874 | DF915 |
| THRUXTON 865 EFI | | 865 | 08- | DF874 | DF915 |
| THRUXTON 865 ACE | | 865 | 15- | DF874 | DF915 |

## DF 875 W

øext. 256 mm øint. 115 — 5,0 — OE

| BRAND MARCA | MODEL MODELO | C.C. | YEAR | FRONT | REAR |
|---|---|---|---|---|---|
| TRIUMPH | | | | | |
| DAYTONA 750 SPORT | | 750 | 91- | DF651 | DF875 |
| TRIDENT 750 (right) | | 750 | 93- | DF652 | DF875 |
| DAYTONA 900 | | 900 | 93-96 | DF651 | DF875 |
| SPRINT 900 (right) | | 900 | 93- | DF651 | DF875 |
| TRIDENT 900 (right) | | 900 | 93- | DF652 | DF875 |
| TRIDENT 900 SPRINT | | 900 | 95- | | DF875 |
| TROPHY 900 (right) | | 900 | 92-93 | DF652 | DF875 |
| TROPHY 900 | | 900 | 94- | DF651 | DF875 |
| DAYTONA 1100 SPORT | | 1100 | 91- | DF651 | DF875 |
| 1200-3 (right) | | 1200 | 93- | DF651 | DF875 |
| 1200-4 (right) | | 1200 | 93- | DF651 | DF875 |
| TROPHY 1200 (right) | | 1200 | 91-93 | DF651 | DF875 |
| TROPHY 1200 | | 1200 | 94- | DF651 | DF875 |

## DF 876 CW

øext. 310 mm øint. 86 — 4,5 / 14,0 — OE

## DF 876 CRWI-D

øext. 310 mm øint. 86 — 5,0 / 14,0

| BRAND MARCA | MODEL MODELO | C.C. | YEAR | FRONT | REAR |
|---|---|---|---|---|---|
| TRIUMPH | | | | | |
| DAYTONA TRIPLE | | 675 | 06-08 | DF876 | DF013 |
| DAYTONA 675 | | 675 | 09- | DF876 | DF013 |

| | | | | |
|---|---|---|---|---|
| DAYTONA 675 SE | 675 | 09- | DF876 | DF013 |
| DAYTONA 675 R | 675 | 11-12 | DF876 | DF013 |
| STREET TRIPLE | 675 | 07- | DF876 | DF013 |
| STREET TRIPLE R | 675 | 09-12 | DF876 | DF013 |

**DF 877 CW** — øext. 310 mm, øint. 78 — 4,5 / 16,0 — OE

| BRAND MARCA | MODEL MODELO | C.C. | YEAR | FRONT | REAR |
|---|---|---|---|---|---|
| TRIUMPH | | | | | |
| DAYTONA 650 | | 650 | 03-05 | DF877 | DF013 |

**DF 878 W** — øext. 180 mm, øint. 58 — 4,0 — OE

| BRAND MARCA | MODEL MODELO | C.C. | YEAR | FRONT | REAR |
|---|---|---|---|---|---|
| KYMCO | | | | | |
| DINK 150 | | 150 | 97- | DF878 | DF878 |

**DF 880 CW** — øext. 320 mm, øint. 72 — 4,5 / 14,5 — OE

**DF 880 CRWi-D** — øext. 320 mm, øint. 72 — 5,0 / 15,0

| BRAND MARCA | MODEL MODELO | C.C. | YEAR | FRONT | REAR |
|---|---|---|---|---|---|
| DUCATI | | | | | |
| 749 | | 749 | 03- | DF880 | DF706 |
| 749 S/R | | 749 | 03- | DF880 | DF706 |
| MONSTER 821 | | 821 | 14- | DF880 | DF769 |
| 848 | | 848 | 08- | DF880 | DF769 |
| 848 EVO | | 848 | 10- | DF880 | DF769 |
| 848 EVO CORSE SE | | 848 | 12- | DF880 | DF769 |
| 848 S | | 848 | 08- | DF880 | DF769 |
| 848 STREETFIGHTER | | 848 | 12- | DF880 | DF769 |
| 848 STREETFIGHTER EVO SP | | 848 | 12- | DF880 | DF769 |
| DESMOSEDICI RR | | 989 | 07- | DF880 | DF706 |
| 999 R | | 999 | 03- | DF880 | DF706 |
| 999 S | | 999 | 03- | DF880 | DF706 |
| 1000 MONSTER S4Rs | | 1000 | 06- | DF880 | DF769 |
| MONSTER S | | 1100 | 09- | DF880 | DF769 |
| MONSTER S (OHLINS) | | 1100 | 09- | DF880 | DF769 |

**DF 881 FLW** — øext. 320 mm, øint. 64 — 4,5 / 14,5 — OE

**DF 881 CW** — øext. 320 mm, øint. 64 — 4,5 / 14,5 — OE

**DF 881 CRWi-D** — øext. 320 mm, øint. 64 — 4,5 / 14,5

| BRAND MARCA | MODEL MODELO | C.C. | YEAR | FRONT | REAR |
|---|---|---|---|---|---|
| BENELLI | | | | | |
| SPORT TORNADO NAKED TRE | | 1130 | 06- | DF881 | DF736 |
| TREK AMAZONAS | | 1130 | 07- | DF881 | DF736 |
| TORNADO TRE 1130 | | 1130 | 06- | DF881 | DF736 |
| DUCATI | | | | | |
| 998 | | 998 | 02- | DF881 | DF630 |

**DF 882 CW** — øext. 340 mm, øint. 60,5 — 5,0 / 11,0 — OE

| BRAND MARCA | MODEL MODELO | C.C. | YEAR | FRONT | REAR |
|---|---|---|---|---|---|
| BUELL | | | | | |
| M2 CYCLONE | | 1200 | 00- | DF882 | DF884 |
| S3 THUNDERBOLT | | 1200 | 00- | DF882 | DF884 |
| SPECIAL M2 CYCLONE | | 1200 | 00- | DF882 | DF884 |
| X1 LIGHTNING | | 1200 | 00- | DF882 | DF884 |

**DF 883 CW** — øext. 320 mm, øint. 64 — 4,5 / 9,5 — OE

| BRAND MARCA | MODEL MODELO | C.C. | YEAR | FRONT | REAR |
|---|---|---|---|---|---|
| APRILIA | | | | | |
| RSV4 FACTORY | | 1000 | 09- | DF883 | DF669 |
| RSV4 R | | 1000 | 09-14 | DF883 | DF669 |
| RSV4 RR | | 1000 | 15- | DF883 | DF669 |
| RSV MILLE | | 1000 | 01- | DF883 | DF669 |
| RSV MILLE R | | 1000 | 01- | DF883 | DF669 |
| RSV TUONO R | | 1000 | 02- | DF883 | DF669 |
| RSV TUONO V4 R | | 1000 | 11- | DF883 | DF669 |
| RSV R FACTORY | | 1000 | 04- | DF883 | DF669 |
| RSV TUONO V4 R | | 1100 | 15- | DF883 | DF669 |
| CAPONORD 1200 | | 1200 | 13- | DF883 | |
| DORSODURO 1200 | | 1200 | 11- | DF883 | |
| BIMOTA | | | | | |
| DB5 MILLE | | 992 | 05- | DF883 | |
| SB8 K SANTAMONICA | | 996 | 06- | DF883 | |
| BMW | | | | | |
| G 650 XMOTO | | 650 | 07- | DF883 | DF703 |
| DUCATI | | | | | |
| 998 S | | 998 | 02- | DF883 | DF630 |
| KTM | | | | | |
| 990 SUPER DUKE | | 990 | 06- | DF883 | DF786 |

**DF 884 W** — øext. 240 mm, øint. 105,5 — 4,5 — OE

| BRAND MARCA | MODEL MODELO | C.C. | YEAR | FRONT | REAR |
|---|---|---|---|---|---|
| BUELL | | | | | |
| M2 CYCLONE | | 1200 | 00- | DF882 | DF884 |
| S3 THUNDERBOLT | | 1200 | 00- | DF882 | DF884 |
| SPECIAL M2 CYCLONE | | 1200 | 00- | DF882 | DF884 |
| X1 LIGHTNING | | 1200 | 00- | DF882 | DF884 |

**DF 885 W** — øext. 220 mm, øint. 112 — 4,0 — OE

**DF 885 PW** — øext. 220 mm, øint. 126,7 — 4,0 — OE

| BRAND MARCA | MODEL MODELO | C.C. | YEAR | FRONT | REAR |
|---|---|---|---|---|---|
| HUSQVARNA | | | | | |
| 510 SM R | | 510 | 05-05 | DF645 | DF885 |
| 510 SM R | | 510 | 06- | DF645 | DF885 |
| 570 SM S | | 570 | 01- | DF645 | DF885 |
| 570 SM R | | 570 | 01- | DF645 | DF885 |
| NOX | | 600 | 01- | DF645 | DF885 |
| 610LT | | 610 | 00- | DF645 | DF885 |
| 610 SM S | | 610 | 00-04 | DF645 | DF885 |
| 610 SM R | | 610 | 00-04 | DF645 | DF885 |
| 610 SM R | | 610 | 05-05 | DF645 | DF885 |
| 610 SM R | | 610 | 06- | DF645 | DF885 |
| 610 SM ie | | 610 | 07- | DF645 | DF885 |
| 630 SMR | | 630 | 06- | DF645 | DF885 |
| STR 650 CRC | | 650 | 07- | DF645 | DF885 |

**DF 887 W** — øext. 220 mm, øint. 110 — 4,5 — OE

| BRAND MARCA | MODEL MODELO | C.C. | YEAR | FRONT | REAR |
|---|---|---|---|---|---|
| VOR | | | | | |
| RC 503 | | 503 | 01- | DF886 | DF887 |
| SM 503 | | 503 | 00- | DF886 | DF887 |

**DF 906 CW** — øext. 310 mm, øint. 83 — 5,0 — OE

**DF 906 CRWi-D** — øext. 310 mm, øint. 83 — 5,0

| BRAND MARCA | MODEL MODELO | C.C. | YEAR | FRONT | REAR |
|---|---|---|---|---|---|
| TRIUMPH | | | | | |
| DAYTONA 675 R | | 675 | 13- | DF906 | DF907 |
| STREET TRIPLE R | | 675 | 13- | DF906 | DF907 |
| STREET TRIPLE RX | | 675 | 15- | DF906 | DF907 |

**DF 907 W** — øext. 220 mm, øint. 82 — 5,0 — OE

| BRAND MARCA | MODEL MODELO | C.C. | YEAR | FRONT | REAR |
|---|---|---|---|---|---|
| TRIUMPH | | | | | |
| DAYTONA 675 R | | 675 | 13- | DF906 | DF907 |
| STREET TRIPLE R | | 675 | 13- | DF906 | DF907 |
| STREET TRIPLE RX | | 675 | 15- | DF906 | DF907 |

**DF 909 CW** — øext. 310 mm, øint. 94 — 5,0 / 21,5 — OE

| BRAND MARCA | MODEL MODELO | C.C. | YEAR | FRONT | REAR |
|---|---|---|---|---|---|
| HONDA | | | | | |
| ST 1300 PAN-EUROPEAN | | 1300 | 02-07 | DF909 | DF910 |
| ST 1300 PAN-EUROPEAN ABS | | 1300 | 08- | DF909 | DF910 |



**OE:** Original equipment (original replacement disc) · **OE:** Equipo original (disco de remplazo del original) For other models years previous to 1990 visit **www.galferonline.es** · Para otros modelos anteriores al año 1990 visitar **www.galferonline.es**
For consult TÜV (ABE) type approvals visit **www.galfermoto.com --> DOWNLOAD --> TÜV CERTIFICATIONS** · Para consultar las homologaciones TÜV (ABE) visitar **www.galfermoto.com --> DESCARGAS --> CERTIFICACIONES TÜV**

## DF 910 W

øext. 316 mm øint. 184 | 6,0 | OE

| BRAND MARCA | MODEL MODELO | C.C. | YEAR | FRONT | REAR |
|---|---|---|---|---|---|
| **HONDA** | | | | | |
| | ST 1300 PAN-EUROPEAN | 1300 | 02-07 | DF909 | DF910 |
| | ST 1300 PAN-EUROPEAN ABS | 1300 | 08- | DF909 | DF910 |

## DF 914 CW

øext. 310 mm øint. 144 | 5,5 | OE

| BRAND MARCA | MODEL MODELO | C.C. | YEAR | FRONT | REAR |
|---|---|---|---|---|---|
| **TRIUMPH** | | | | | |
| | BONNEVILLE /T100 | 800 | 04-05 | DF914 | DF915 |
| | BONNEVILLE /T100 | 850 | 05-07 | DF914 | DF915 |
| | BONNEVILLE EFI /T100 | 800 | 08- | DF914 | DF915 |
| | BONNEVILLE SE | 850 | 09- | DF914 | DF915 |
| | BONEVILLE ACE | 865 | 15- | DF914 | DF915 |
| | BONEVILLE NEW CHURCH | 865 | 15- | DF914 | DF915 |
| | BONEVILLE SPIRIT | 865 | 15- | DF914 | DF915 |
| | SCRAMBLER | 900 | 06-07 | DF914 | DF915 |
| | SCRAMBLER EFI | 900 | 08- | DF914 | DF915 |
| | THUNDERBIRD 900/SPORT | 900 | 95- | DF914 | DF916 |

## DF 915 W

øext. 255 mm øint. 105 | 5,5 | OE

| BRAND MARCA | MODEL MODELO | C.C. | YEAR | FRONT | REAR |
|---|---|---|---|---|---|
| **TRIUMPH** | | | | | |
| | BONNEVILLE /T100 | 800 | 04-05 | DF914 | DF915 |
| | TIGER 800 | 800 | 11- | | DF915 |
| | TIGER 800 XC | 800 | 11-14 | | DF915 |
| | TIGER 800 XCx | 800 | 15- | | DF915 |
| | TIGER 800 XRx | 800 | 15- | | DF915 |
| | BONNEVILLE /T100 | 850 | 05-07 | DF914 | DF915 |
| | BONNEVILLE EFI /T100 | 800 | 08- | DF914 | DF915 |
| | BONNEVILLE SE | 850 | 09- | DF914 | DF915 |
| | BONEVILLE ACE | 865 | 15- | DF914 | DF915 |
| | BONEVILLE NEW CHURCH | 865 | 15- | DF914 | DF915 |
| | BONEVILLE SPIRIT | 865 | 15- | DF914 | DF915 |
| | THRUXTON 865 | 865 | 04-07 | DF874 | DF915 |
| | THRUXTON 865 EFI | 865 | 08- | DF874 | DF915 |
| | THRUXTON 865 ACE | 865 | 15- | DF874 | DF915 |
| | SCRAMBLER | 900 | 06-07 | DF914 | DF915 |
| | SCRAMBLER EFI | 900 | 08- | DF914 | DF915 |
| | SPRINT RS | 955 | 00- | DF653 | DF915 |
| | SPRINT ST 955 | 955 | 99- | DF653 | DF915 |
| | SPEED TRIPLE 1050 | 1050 | 11-11 | | DF915 |
| | SPRINT ST 1050 | 1050 | 05-05 | | DF915 |
| | SPRINT ST 1050 | 1050 | 06- | DF655 | DF915 |
| | TIGER 1050 | 1050 | 07- | DF661 | DF915 |
| | TIGER 1050 ABS | 1050 | 07- | DF661 | DF915 |

## DF 916 W

øext. 285 mm øint. 144 | 5,0 | OE

| BRAND MARCA | MODEL MODELO | C.C. | YEAR | FRONT | REAR |
|---|---|---|---|---|---|
| **TRIUMPH** | | | | | |
| | THUNDERBIRD 900/SPORT | 900 | 95- | DF914 | DF916 |

## MF 005 — mm 130 x 30

| BRAND MARCA | MODEL MODELO | C.C. | YEAR | FRONT | REAR |
|---|---|---|---|---|---|
| **HONDA** | | | | | |
| | CMX REBEL 250 (NISSIN) | 250 | 96-97 | FD187 | MF005 |
| | CMX REBEL 250 (NISSIN) | 250 | 98- | FD187 | MF005 |
| | CMX REBEL 250 (GRIMECA) | 250 | 00-07 | FD195 | MF005 |

## MF 006 — mm 130 x 30

| BRAND MARCA | MODEL MODELO | C.C. | YEAR | FRONT | REAR |
|---|---|---|---|---|---|
| **HONDA** | | | | | |
| | CB 250 | 250 | 92- | FD266 | MF006 |
| | CB 250 TWO FIFTY | 250 | 92- | FD266 | MF006 |

## MF 009 — mm 130 x 25

| BRAND MARCA | MODEL MODELO | C.C. | YEAR | FRONT | REAR |
|---|---|---|---|---|---|
| **HONDA** | | | | | |
| | CN 250 HELIX | 250 | 90- | FD054 | MF009 |
| | CN 250 SPAZIO | 250 | 91- | FD054 | MF009 |

## MF 035 — mm 160 x 40

| BRAND MARCA | MODEL MODELO | C.C. | YEAR | FRONT | REAR |
|---|---|---|---|---|---|
| **HONDA** | | | | | |
| | CB 500 | 500 | 95-96 | FD266 | MF035 |
| | VT 600 SHADOW | 600 | 06- | FD266 | MF035 |
| | VT 600 CD SHADOW VLX | 600 | 94- | FD266 | MF035 |

## MF 037 — mm 130 x 25

| BRAND MARCA | MODEL MODELO | C.C. | YEAR | FRONT | REAR |
|---|---|---|---|---|---|
| **HONDA** | | | | | |
| | CN 250 | 250 | 93- | FD054 | MF037 |

## MF 044 — mm 160 x 30

| BRAND MARCA | MODEL MODELO | C.C. | YEAR | FRONT | REAR |
|---|---|---|---|---|---|
| **HONDA** | | | | | |
| | PANTHEON 150 | 150 | 98-02 | FD207 | MF044 |
| | FES 250 FORESIGHT | 250 | 97-01 | FD207 | MF044 |
| | PS 250 | 250 | 04- | FD207 | MF044 |
| **PEUGEOT** | | | | | |
| | SV 250 | 250 | 01-02 | FD207 | MF044 |

## MF 051 — mm 125 x 25

| BRAND MARCA | MODEL MODELO | C.C. | YEAR | FRONT | REAR |
|---|---|---|---|---|---|
| **HONDA** | | | | | |
| | @ 150 | 150 | 00- | FD284 | MF051 |
| | DYLAN 150 | 150 | 02- | FD284 | MF051 |
| | PCX 150 | 150 | 13- | FD439 | MF051 |
| | PS 150i | 150 | 06- | FD284 | MF051 |
| | SH 150 SCOOPY | 150 | 01-04 | FD284 | MF051 |
| | SH 150 i SCOOPY | 150 | 05- | FD284 | MF051 |
| | SH 150 i SCOOPY (TAMBOR TRAS) | 150 | 09- | FD284 | MF051 |
| | CBF 250 | 250 | 04- | FD145 | MF051 |
| | CBF 250 TWISTER | 250 | 04- | FD444 | MF051 |
| **HONDA BRAZIL** | | | | | |
| | CBF 250 | 250 | 04- | FD145 | MF051 |
| **HONDA INDONESIA** | | | | | |
| | PCX 150 | 150 | 13- | FD439 | MF051 |
| **HONDA MALASIA** | | | | | |
| | PCX 150 | 150 | 13- | FD439 | MF051 |

## MF 151 — mm 130 x 28

| BRAND MARCA | MODEL MODELO | C.C. | YEAR | FRONT | REAR |
|---|---|---|---|---|---|
| **SUZUKI** | | | | | |
| | GN 250 | 250 | 93- | FD046 | MF151 |
| | TU 250 X | 250 | 97-01 | FD209 | MF151 |
| | TU 250 X | 250 | 02- | FD174 | MF151 |

## MF 152 — mm 160 x 30

| BRAND MARCA | MODEL MODELO | C.C. | YEAR | FRONT | REAR |
|---|---|---|---|---|---|
| **KAWASAKI** | | | | | |
| | EL 250, E | 250 | 91- | FD062 | MF152 |
| | ER-5 | 500 | 97-00 | FD090 | MF152 |
| | ER-5 | 500 | 01- | FD174 | MF152 |
| | GPZ 500 S | 500 | 90-92 | FD075 | MF152 |

## MF 153 — mm 180 x 40

| BRAND MARCA | MODEL MODELO | C.C. | YEAR | FRONT | REAR |
|---|---|---|---|---|---|
| **KAWASAKI** | | | | | |
| | EN 500 | 500 | 90-93 | FD062 | MF153 |
| | EN 500 VULCAN | 500 | 94- | FD062 | MF153 |
| | VN 750 VULCAN | 750 | 93- | FD062 | MF153 |

## MF 301 — mm 120 x 35

| BRAND MARCA | MODEL MODELO | C.C. | YEAR | FRONT | REAR |
|---|---|---|---|---|---|
| **SUZUKI** | | | | | |
| | AN VECSTAR | 150 | 98- | FD177 | MF301 |

## MF 303 — mm 160 x 30

| BRAND MARCA | MODEL MODELO | C.C. | YEAR | FRONT | REAR |
|---|---|---|---|---|---|
| **SUZUKI** | | | | | |
| | LS 650 SAVAGE | 650 | 90-91 | FD209 | MF303 |
| | LS 650 P | 650 | 92-04 | FD209 | MF303 |
| | LS 650 (S40 BOULEVAR USA) | 650 | 05-08 | FD209 | MF303 |
| | LS 650 (S40 BOULEVAR USA) | 650 | 09- | FD209 | MF303 |

## MF 304 — mm 180 x 36

| BRAND MARCA | MODEL MODELO | C.C. | YEAR | FRONT | REAR |
|---|---|---|---|---|---|
| **SUZUKI** | | | | | |
| | VS 600 GL INTRUDER | 600 | 95- | FD066 | MF304 |
| | VS 800 GL | 800 | 93- | FD066 | MF304 |
| | VS 800 GL, INTRUDER | 800 | 91-92 | FD078 | MF304 |
| | VS 800 GL, N, INTRUDER | 800 | 93-99 | FD066 | MF304 |
| | VZ 800 MARAUDER | 800 | 97- | FD179 | MF304 |

## MF 451 — mm 130 x 28

| BRAND MARCA | MODEL MODELO | C.C. | YEAR | FRONT | REAR |
|---|---|---|---|---|---|
| **PIAGGIO** | | | | | |
| | HEXAGON GT 250 4-T (G) | 250 | 98-99 | FD162 | MF451 |
| | HEXAGON GT 250 4-T (H) | 250 | 98-99 | FD277 | MF451 |
| **YAMAHA** | | | | | |
| | SR 250, SP | 250 | 91- | FD056 | MF451 |
| | XV 250 VIRAGO | 250 | 91-92 | FD127 | MF451 |
| | XV 250 VIRAGO | 250 | 93-95 | FD056 | MF451 |
| | XV 250 VIRAGO | 250 | 96-00 | FD169 | MF451 |

## MF 453 — mm 110 x 25

| BRAND MARCA | MODEL MODELO | C.C. | YEAR | FRONT | REAR |
|---|---|---|---|---|---|
| **TGB** | | | | | |
| | 42 RACING 150 | 150 | 06- | FD252 | MF453 |
| | 101 | 150 | 05- | FD188 | MF453 |
| | 409 F | 150 | 06- | FD252 | MF453 |

## MF 457 — mm 160 x 30

| BRAND MARCA | MODEL MODELO | C.C. | YEAR | FRONT | REAR |
|---|---|---|---|---|---|
| **YAMAHA** | | | | | |
| | SP 250 MAGESTY | 250 | 96-97 | FD169 | MF457 |

## MF 459

mm 200 x 40

| BRAND MARCA | MODEL MODELO | C.C. | YEAR | FRONT | REAR |
|---|---|---|---|---|---|
| **YAMAHA** | | | | | |
| | XV 535 S VIRAGO | 535 | 95- | FD142 | MF459 |
| | XVS 650 DRAG STAR | 650 | 97- | FD142 | MF459 |
| | XVS 650 STAR CLASSIC | 650 | 97- | FD142 | MF459 |
| | XVS 650 STAR SILVERADO | 650 | 97- | FD142 | MF459 |
| | XV 1100 VIRAGO | 1100 | 93-94 | FD087 | MF459 |
| | XV 1100 VIRAGO | 1100 | 95-98 | FD142 | MF459 |

## MF 477

mm 180 x 40

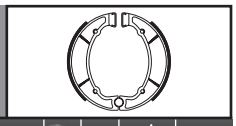

| BRAND MARCA | MODEL MODELO | C.C. | YEAR | FRONT | REAR |
|---|---|---|---|---|---|
| **YAMAHA** | | | | | |
| | XV 750 | 750 | 94-94 | FD127 | MF477 |
| | XV 750 | 750 | 95- | FD142 | MF477 |
| | XV 750 VIRAGO | 750 | 93- | FD087 | MF477 |

## MF 601

mm 150 x 24

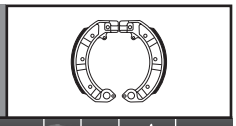

| BRAND MARCA | MODEL MODELO | C.C. | YEAR | FRONT | REAR |
|---|---|---|---|---|---|
| **LML** | | | | | |
| | STAR 2T (TODAS) | 150 | 10- | FD200 | MF601 |
| | STAR GT 2T | 150 | 10- | FD200 | MF601 |
| | STAR 4T (TODAS) | 151 | 10- | FD200 | MF601 |
| | STAR GT 4T | 151 | 10- | FD200 | MF601 |
| | STAR RS 4T | 151 | 10- | FD200 | MF601 |
| | STAR MAT SERIES 4T | 151 | 10- | FD200 | MF601 |
| | STAR BICOLOR VINTAGE 4T | 151 | 10- | FD200 | MF601 |
| | STAR CORSA 4T | 165 | 10- | FD200 | MF601 |
| | STAR 4T (TODAS) | 200 | 12- | FD200 | MF601 |
| | STAR ART (TODAS) | 200 | 12- | FD200 | MF601 |
| | STAR GT (TODAS) | 200 | 12- | FD200 | MF601 |
| | STAR URBAN (TODAS) | 200 | 12- | FD200 | MF601 |
| | STAR RS/SPORT | 200 | 12- | FD200 | MF601 |
| | STAR OFF ROAD | 200 | 12- | FD200 | MF601 |

## MF 610

mm 200 x 25

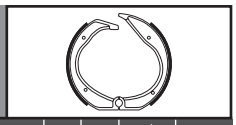

| BRAND MARCA | MODEL MODELO | C.C. | YEAR | FRONT | REAR |
|---|---|---|---|---|---|
| **BMW** | | | | | |
| | R 65 R | 650 | 93- | FD044 | MF610 |
| | R 80 GS | 800 | 93- | FD044 | MF610 |
| | R 100 GS, PD, RT | 1000 | 93-94 | FD044 | MF610 |

## MF 616

mm 200 x 27

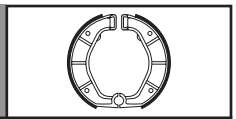

| BRAND MARCA | MODEL MODELO | C.C. | YEAR | FRONT | REAR |
|---|---|---|---|---|---|
| **BMW** | | | | | |
| | R 80 R | 800 | 94- | FD198 | MF616 |
| | R 100 R | 1000 | 92-94 | FD137 | MF616 |
| | R 100 ROADSTER | 1000 | 93- | FD198 | MF616 |

## MF 636

mm 110 x 25

| BRAND MARCA | MODEL MODELO | C.C. | YEAR | FRONT | REAR |
|---|---|---|---|---|---|
| **PIAGGIO** | | | | | |
| | HEXAGON | 150 | 94-99 | FD153 | MF636 |
| | SKIPPER | 150 | 93-97 | FD152 | MF636 |
| | VESPA ET4 | 150 | 01- | FD200 | MF636 |

## MF 640

mm 130 x 28

| BRAND MARCA | MODEL MODELO | C.C. | YEAR | FRONT | REAR |
|---|---|---|---|---|---|
| **MBK MOTOBEKANE** | | | | | |
| | DOODO | 150 | 01- | FD153 | MF640 |
| **YAMAHA** | | | | | |
| | FLY ONE | 150 | 92- | FD079 | MF640 |
| | TEO´S 150 | 150 | 01- | FD153 | MF640 |
| | TW 200 | 200 | 98- | FD214 | MF640 |
| | XVS 250 DRAG STAR | 250 | 01- | FD169 | MF640 |
| | YBR 250 | 250 | 07- | FD117 | MF640 |
| | YS 250 FAZER | 250 | 06-10 | FD117 | MF640 |

## MF 740

mm 130 x 25

| BRAND MARCA | MODEL MODELO | C.C. | YEAR | FRONT | REAR |
|---|---|---|---|---|---|
| **KYMCO** | | | | | |
| | MOVIE XL 150 | 150 | 01- | FD187 | MF740 |
| | PEOPLE | 150 | 99- | FD261 | MF740 |
| | PEOPLE | 200 | 05- | FD261 | MF740 |

## MF 765

mm 152 x 25

| BRAND MARCA | MODEL MODELO | C.C. | YEAR | FRONT | REAR |
|---|---|---|---|---|---|
| **LAMBRETTA** | | | | | |
| | 150 LI | 150 | 14- | MF765 | MF765 |
| | 175 LI | 175 | 14- | MF765 | MF765 |
| | 175 TV II | 175 | 14- | MF765 | MF765 |

## MF 766

mm 152 x 25

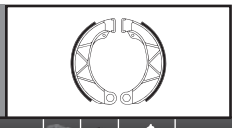

| BRAND MARCA | MODEL MODELO | C.C. | YEAR | FRONT | REAR |
|---|---|---|---|---|---|
| **LAMBRETTA** | | | | | |
| | 150 DL | 150 | 14- | MF766 | MF766 |
| | 200 DL | 200 | 14- | MF766 | MF766 |

GALFER
PERFORMANCE BRAKING SYSTEMS
1
MOTO3
WORLD CHAMPION
2014
ÁLEX MÁRQUEZ
HONDA MOTO3

GALFER MOTO

FD BRAKE PADS

DF DISC WAVE®

MF BRAKE SHOES

# Off-Road

## MOTOCROSS
## ENDURO
## TRIAL

*(from year 1990)*

FOR OFF-ROAD GALFER Kit SEE PAGES 390-393

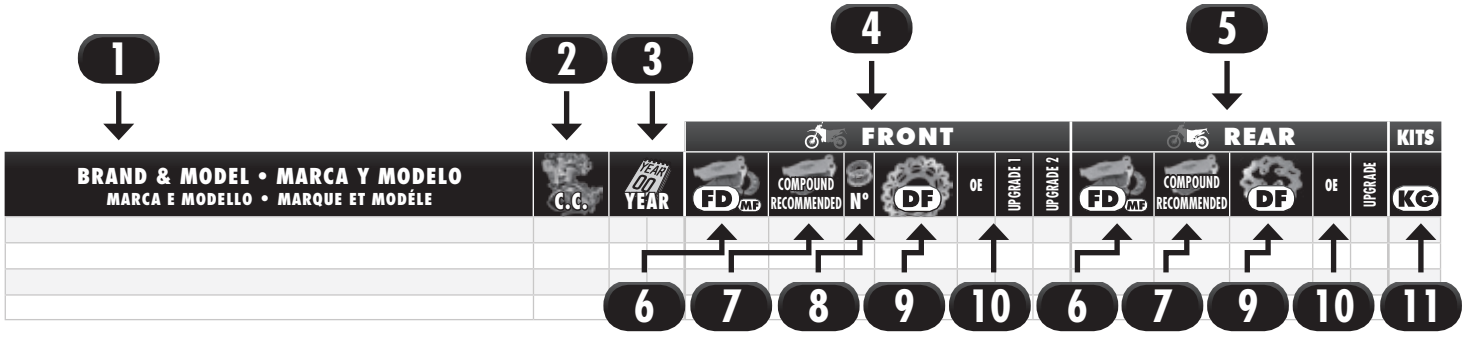


## DESCRIPTION • DESCRIPCIÓN • DESCRIZIONE • DESCRIPTION

**1**
**Brand and model of the motocycle**
**Marca y modelo de la moto**
Marca e modello del motociclo
Marque et modéle de la moto

**2**
**Cylinder capacity of the motocycle**
**Cilindrada de la moto**
Cilindrata del motociclo
Cylindrée de la moto

**3**
**Fabrication year of the motocycle**
**Año de fabricación de la moto**
Anno di produzione del motociclo
Année de fabrication de la moto

**4**
**Front zone of the motorcycle**
**Zona delantera de la moto**
Area anteriore del motociclo
Zone avant de la moto

**5**
**Rear zone of the motorcycle**
**Zona trasera de la moto**
Area posteriore del motociclo
Zone arrière de la moto

**6**
**Brake pads or shoes reference**
**Referencia de las pastillas o mordazas de freno**
Riferimento pastiglie o ganasce freno
Référence plaquettes ou mâchoires de frein

**7**
**Brake pads or shoes compound recommended for the motorcycle model**
**Compuesto recomendado de las pastillas o mordazas de freno para el modelo de moto**
Composti consigliata pastiglie o ganasce freno per il modello del motociclo
Composé recommandée plaquettes ou mâchoires de frein pour le modèle de moto

**8**
**Number of front brake discs**
**Número de discos de freno delanteros**
Numero di dischi freno anteriori
Nombre de disques de frein avant

**9**
**Brake disc reference**
**Referencia del disco de freno**
Riferimento disco freno
Référence disque de frein

**10**
**Brake disc options (OE: original equipment / Upgrade: more performance)**
**Opciones del disco de freno (OE: equipo original / Upgrade: más prestaciones)**
Opzioni disco freno (OE: attrezzatura originale / Upgrade: maggiori prestazioni)
Options disque de frein (OE: équipement original / Upgrade: plus de performance)

**11**
**Brake kit reference**
**Referencia del kit de freno**
Riferimento kit freno
Référence kit de frein

| BRAND & MODEL • MARCA Y MODELO<br>MARCA E MODELLO • MARQUE ET MODÉLE | C.C. | YEAR | | FRONT FD MF | FRONT COMPOUND RECOMMENDED | FRONT N° | FRONT DF | FRONT OE | FRONT UPGRADE 1 | FRONT UPGRADE 2 | REAR FD MF | REAR COMPOUND RECOMMENDED | REAR DF | REAR OE | REAR UPGRADE | KITS KG |
|---|---|---|---|---|---|---|---|---|---|---|---|---|---|---|---|---|
| **AJP** | | | | | | | | | | | | | | | | |
| PR 4 125 ENDURO | 125 | 05 | 09 | FD133 | G1054 | 1 | DF677 | W | FLW | FLS | FD223 | G1805 | DF678 | WLL | WS | |
| PR 4 125 ENDURO / PRO | 125 | 10 | | FD162 | G1054 | 1 | DF677 | W | FLW | FLS | FD252 | G1054 | DF678 | WLL | WS | |
| PR 4 125 SM | 125 | 05 | 09 | FD133 | G1054 | 1 | DF677 | W | FLW | FLS | FD223 | G1054 | DF678 | WLL | WS | |
| PR 4 125 SM / PRO | 125 | 10 | | FD162 | G1054 | 1 | DF677 | W | FLW | FLS | FD252 | G1054 | DF678 | WLL | WS | |
| MX 200 | 200 | 09 | | FD162 | G1054 | 1 | | | | | FD065 | G1054 | | | | |
| PR 4 200 ENDURO / PRO | 200 | 10 | | FD162 | G1054 | 1 | DF677 | W | FLW | FLS | FD252 | G1054 | DF678 | WLL | WS | |
| PR 4 200 SM / PRO | 200 | 10 | | FD162 | G1054 | 1 | DF677 | W | FLW | FLS | FD252 | G1054 | DF678 | WLL | WS | |
| ENDURO 250 | 250 | 05 | | FD133 | G1054 | 1 | DF677 | W | FLW | FLS | FD223 | G1805 | DF678 | WLL | WS | |
| PR 5 ENDURO 250 | 250 | 09 | 10 | FD164 | G1396 | 1 | | | | | FD093 | G1396 | | | | |
| PR 5 ENDURO 250 | 250 | 11 | | FD409 | G1396 | 1 | | | | | FD093 | G1396 | | | | |
| PR 5 SUPERMOTO 250 | 250 | 09 | 10 | FD164 | G1054 | 1 | | | | | FD093 | G1054 | | | | |
| PR 5 SUPERMOTO 250 | 250 | 11 | | FD409 | G1054 | 1 | | | | | FD093 | G1396 | | | | |
| **ALFER** | | | | | | | | | | | | | | | | |
| 125 VR 4T | 125 | 03 | | FD138 | G1396 | 1 | DF606 | W | FLW | | FD165 | G1396 | DF607 | W | WLL | |
| 125 VR 4T NO LIMITS | 125 | 03 | | FD138 | G1396 | 1 | DF606 | W | FLW | | FD165 | G1396 | DF607 | W | WLL | |
| 250 AR | 250 | 92 | 92 | FD089 | G1054 | 1 | | | | | FD075 | G1396 | | | | |
| 250 AR | 250 | 93 | | FD138 | G1054 | 1 | | | | | FD075 | G1396 | | | | |
| 250 VR | 250 | 94 | 94 | FD138 | G1054 | 1 | | | | | FD075 | G1396 | | | | |
| 250 VR ENDURO | 250 | 95 | | FD138 | G1054 | 1 | DF606 | W | FLW | | FD165 | G1396 | DF607 | W | WLL | |
| 250 VR MOTOCROSS | 250 | 95 | | FD138 | G1054 | 1 | DF606 | W | FLW | | FD165 | G1396 | DF607 | W | WLL | |
| NO LIMITS | 250 | 95 | | FD138 | G1054 | 1 | DF606 | W | FLW | | FD165 | G1396 | DF607 | W | WLL | |
| 300 TX | 300 | 90 | | FD065 | G1054 | 1 | | | | | FD012 | G1054 | | | | |
| **APRILIA** | | | | | | | | | | | | | | | | |
| MX 125 | 125 | 04 | | FD138 | G1054 | 1 | DF660 | CW | CRW | | FD135 | G1054 | | | | |
| SX 125 | 125 | 08 | | FD138 | G1054 | 1 | | | | | FD135 | G1054 | | | | |
| CLIMBER 250 | 250 | 90 | 91 | FD065 | G1805 | 1 | | | | | FD048 | G1805 | | | | |
| CLIMBER 250 R | 250 | 92 | | FD065 | G1805 | 1 | | | | | FD048 | G1805 | | | | |
| CLIMBER 280 R | 280 | 93 | | FD065 | G1805 | 1 | | | | | FD048 | G1805 | | | | |
| MXV 450 | 450 | 07 | | FD164 | G1396 | 1 | | | | | FD286 | G1396 | | | | |
| RXV 450 | 450 | 06 | | FD164 | G1396 | 1 | | | | | FD286 | G1396 | | | | |
| SXV 450 | 450 | 06 | | | | 1 | DF826 | CW | CRW | | FD286 | G1396 | DF827 | W | | |
| RXV 550 | 550 | 07 | | FD164 | G1396 | 1 | | | | | FD286 | G1396 | | | | |
| **ATK** | | | | | | | | | | | | | | | | |
| TODOS MODELOS | | 92 | 93 | FD085 | G1054 | 1 | | | | | FD012 | G1054 | | | | |
| TODOS MODELOS | | 93 | 96 | FD086 | G1054 | 1 | | | | | FD086 | G1396 | | | | |
| TODOS MODELOS | | 97 | | FD138 | G1054 | 1 | | | | | FD165 | G1396 | | | | |
| **BENELLI** | | | | | | | | | | | | | | | | |
| BX 449 | 449 | 07 | | FD138 | G1396 | 1 | DF862 | FLW | | | FD291 | G1396 | DF632 | W | | |
| 510 ENDURO | 510 | 08 | | FD138 | G1396 | 1 | DF862 | FLW | | | FD165 | G1396 | DF632 | W | | |
| **BETA** | | | | | | | | | | | | | | | | |
| EVO 80 JUNIOR | 80 | 09 | | FD223 | G1805 | 1 | DF804 | W | | | FD335 | G1805 | | | | |
| REV 3 | 80 | 00 | 07 | FD065 | G1805 | 1 | | | | | FD065 | G1805 | | | | |
| REV 3 | 80 | 08 | | FD223 | G1805 | 1 | | | | | FD335 | G1805 | | | | |
| EVO 125 | 125 | 09 | 11 | FD223 | G1805 | 1 | DF804 | W | | | FD428 | G1805 | | | | |
| EVO 125 MY12 | 125 | 12 | | FD223 | G1805 | 1 | DF804 | W | | | FD428 | G1805 | | | | |
| REV 3 | 125 | 00 | 04 | FD223 | G1805 | 1 | | | | | FD223 | G1805 | | | | |
| REV 3 | 125 | 05 | 05 | FD223 | G1805 | 1 | | | | | FD223 | G1805 | | | | |
| REV 3 | 125 | 06 | | FD223 | G1805 | 1 | | | | | FD335 | G1805 | | | | |
| RR 125 4T SM | 125 | 06 | | FD162 | G1054 | 1 | | | | | FD456 | G1054 | | | | |
| RR MOTARD | 125 | 08 | | FD162 | G1054 | 1 | | | | | FD456 | G1054 | | | | |
| SYNT 125 | 125 | 94 | | FD065 | G1805 | 1 | | | | | FD151 | G1805 | DF643 | | | |
| TR 35 125 | 125 | 91 | | FD065 | G1805 | 1 | | | | | FD102 | G1805 | | | | |
| ZERO 125 | 125 | 92 | | FD065 | G1805 | 1 | | | | | FD102 | G1805 | | | | |
| 200 ALP | 200 | 00 | 07 | FD065 | G1054 | 1 | | | | | FD065 | G1054 | | | | |
| 200 ALP | 200 | 08 | | FD162 | G1054 | 1 | | | | | FD456 | G1054 | | | | |
| EVO 200 | 200 | 09 | 11 | FD223 | G1805 | 1 | | | | | FD428 | G1805 | | | | |
| EVO 200 MY12 | 200 | 12 | | FD223 | G1805 | 1 | DF804 | W | | | FD428 | G1805 | | | | |
| REV 3 | 200 | 06 | | FD223 | G1805 | 1 | | | | | FD335 | G1805 | | | | |
| 240 ST | 240 | 92 | | FD065 | G1805 | 1 | DF804 | W | | | FD102 | G1805 | | | | |
| 250 RR 2T ENDURO | 250 | 12 | | FD164 | G1396 | 1 | DF814 | W | | | FD456 | G1054 | DF815 | W | WLL | |
| 250 RR 4T | 250 | 05 | | FD164 | G1396 | 1 | DF635 | FLW | FLS | FRS | FD456 | G1054 | DF670 | W | PW | |
| EVO 250 2T | 250 | 09 | 11 | FD223 | G1805 | 1 | DF804 | W | | | FD428 | G1805 | | | | |
| EVO 250 2T MY12 | 250 | 12 | | FD223 | G1805 | 1 | DF804 | W | | | FD428 | G1805 | | | | |
| EVO 250 4T | 250 | 09 | 11 | FD223 | G1805 | 1 | DF804 | W | | | FD428 | G1805 | | | | |
| EVO 250 4T MY12 | 250 | 12 | | FD223 | G1805 | 1 | DF804 | W | | | FD428 | G1805 | | | | |
| REV 3 | 250 | 00 | 04 | FD223 | G1805 | 1 | | | | | FD223 | G1805 | | | | |
| REV 3 | 250 | 05 | 05 | FD223 | G1805 | 1 | | | | | FD224 | G1805 | | | | |
| REV 3 | 250 | 06 | | FD223 | G1805 | 1 | | | | | FD335 | G1805 | | | | |
| REV 4T | 250 | 07 | | FD223 | G1805 | 1 | | | | | FD335 | G1805 | | | | |
| TECHNO 250 | 250 | 94 | | FD065 | G1805 | 1 | DF804 | W | | | FD151 | G1805 | DF643 | | | |
| SYNT 260 | 260 | 92 | 93 | FD065 | G1805 | 1 | DF804 | W | | | FD102 | G1805 | | | | |
| SYNT 260 | 260 | 94 | | FD065 | G1805 | 1 | DF804 | W | | | FD151 | G1805 | DF643 | | | |

OE discs → W FLW CW Special discs → WLL WS RW RWS FLS FRS CRW

| BRAND & MODEL • MARCA Y MODELO<br>MARCA E MODELLO • MARQUE ET MODÉLE | C.C. | YEAR | | FRONT FD MF | FRONT COMPOUND RECOMMENDED | FRONT N° | FRONT DF | FRONT OE | FRONT UPGRADE 1 | FRONT UPGRADE 2 | REAR FD MF | REAR COMPOUND RECOMMENDED | REAR DF | REAR OE | REAR UPGRADE | KITS KG |
|---|---|---|---|---|---|---|---|---|---|---|---|---|---|---|---|---|
| ZERO | 260 | 98 | | FD065 | G1805 | 1 | DF804 | W | | | FD065 | G1805 | | | | |
| ZERO 93 GARA | 260 | 93 | 97 | FD065 | G1805 | 1 | DF804 | W | | | FD159 | G1805 | DF619 | | | |
| REV 3 | 270 | 05 | | FD223 | G1805 | 1 | | | | | FD335 | G1805 | | | | |
| EVO 290 2T | 290 | 09 | | FD223 | G1805 | 1 | | | | | FD428 | G1805 | | | | |
| 300 RR 2T ENDURO | 300 | 13 | | FD164 | G1396 | 1 | DF814 | W | | | FD456 | G1054 | DF815 | W | WLL | |
| EVO 300 2T MY12 | 300 | 12 | | FD223 | G1805 | 1 | | | | | FD428 | G1805 | | | | |
| EVO 300 4T | 300 | 09 | | FD223 | G1805 | 1 | | | | | FD428 | G1805 | | | | |
| EVO 300 4T MY12 | 300 | 12 | | FD223 | G1805 | 1 | | | | | FD428 | G1805 | | | | |
| XTRAINER | 300 | 15 | | FD164 | G1396 | 1 | DF814 | W | | | FD456 | G1054 | DF815 | W | WLL | |
| 350 RR 4T | 350 | 11 | 12 | FD164 | G1396 | 1 | DF635 | FLW | FLS | FRS | FD456 | G1054 | DF670 | W | PW | |
| 350 RR 4T ENDURO | 350 | 13 | | FD164 | G1396 | 1 | DF814 | W | | | FD456 | G1054 | DF815 | W | WLL | |
| 350 RR efi | 350 | 15 | | FD164 | G1396 | 1 | DF814 | W | | | FD456 | G1054 | DF815 | W | WLL | |
| M 4 | 350 | 06 | | FD337 | G1054 | 1 | | | | | FD093 | G1054 | | | | |
| MOTARD 4.0 | 350 | 05 | 06 | FD337 | G1054 | 1 | | | | | FD075 | G1054 | | | | |
| MOTARD 4.0 | 350 | 07 | | FD337 | G1054 | 1 | | | | | FD456 | G1054 | | | | |
| 390 RR 4T | 390 | 15 | | FD164 | G1396 | 1 | DF814 | W | | | FD456 | G1054 | DF815 | W | WLL | |
| 400 RR 4T | 400 | 05 | 12 | FD164 | G1396 | 1 | DF635 | FLW | FLS | FRS | FD456 | G1054 | DF670 | W | PW | |
| 400 RR 4T ENDURO | 400 | 13 | | FD164 | G1396 | 1 | DF814 | W | | | FD456 | G1054 | DF815 | W | WLL | |
| 430 RR 4T | 430 | 15 | | FD164 | G1396 | 1 | DF814 | W | | | FD456 | G1054 | DF815 | W | WLL | |
| 450 RR 4T | 450 | 05 | 12 | FD164 | G1396 | 1 | DF635 | FLW | FLS | FRS | FD456 | G1054 | DF670 | W | PW | |
| 450 RR 4T ENDURO | 450 | 13 | | FD164 | G1396 | 1 | DF814 | W | | | FD456 | G1054 | DF815 | W | WLL | |
| 480 RR 4T | 480 | 15 | | FD164 | G1396 | 1 | DF814 | W | | | FD456 | G1054 | DF815 | W | WLL | |
| 498 RR 4T | 498 | 12 | 12 | FD164 | G1396 | 1 | DF635 | FLW | FLS | FRS | FD456 | G1054 | DF670 | W | PW | |
| 498 RR 4T ENDURO | 498 | 13 | | FD164 | G1396 | 1 | DF814 | W | | | FD456 | G1054 | DF815 | W | WLL | |
| 525 RR 4T | 525 | 05 | | FD164 | G1396 | 1 | DF635 | FLW | FLS | FRS | FD456 | G1054 | DF670 | W | PW | |
| **BLATA** | | | | | | | | | | | | | | | | |
| MOTARD 125 | 125 | 07 | | FD341 | G1054 | 1 | | | | | FD065 | G1054 | | | | |
| **BMW** | | | | | | | | | | | | | | | | |
| G 450 X | 450 | 08 | | FD138 | G1396 | 1 | DF710 | FLW | FLS | FRS | FD291 | G1396 | DF711 | W | WLL | |
| SPORT ENDURO 450 | 450 | 08 | | FD138 | G1396 | 1 | DF710 | FLW | FLS | FRS | FD291 | G1396 | DF711 | W | WLL | |
| **BREMBO OFF ROAD** | | | | | | | | | | | | | | | | |
| 122A99021 | | | | FD138 | G1396 | | | | | | | | | | | |
| XQ21361 | | | | FD138 | G1396 | | | | | | | | | | | |
| XQ21390 | | | | | | | | | | | FD291 | G1396 | | | | |
| **BULTACO** | | | | | | | | | | | | | | | | |
| SHERCO 125 | 125 | 00 | | FD065 | G1805 | 1 | | | | | FD065 | G1805 | | | | |
| SHERCO 200 | 200 | 00 | | FD065 | G1805 | 1 | | | | | FD065 | G1805 | | | | |
| SHERCO 2.5 | 250 | 99 | | FD065 | G1805 | 1 | | | | | FD065 | G1805 | | | | |
| SHERCO 290 | 290 | 00 | | FD065 | G1805 | 1 | | | | | FD065 | G1805 | | | | |
| **CAGIVA** | | | | | | | | | | | | | | | | |
| W8 125 | 125 | 92 | | FD089 | G1054 | 1 | | | | | FD012 | G1054 | | | | |
| W8 PRO ACTION | 125 | 91 | | FD089 | G1054 | 1 | | | | | FD048 | G1054 | | | | |
| WMX 125 | 125 | 90 | | FD089 | G1054 | 1 | | | | | FD075 | G1396 | | | | |
| W12 350 | 350 | 93 | | FD089 | G1054 | 1 | | | | | FD135 | G1054 | | | | |
| **CANNONDALE** | | | | | | | | | | | | | | | | |
| XC 400 | 400 | 01 | | FD164 | G1054 | 1 | DF338 | W | | | FD114 | G1396 | DF718 | W | | |
| E 440 | 440 | 01 | | FD164 | G1054 | 1 | DF338 | W | | | FD114 | G1396 | DF718 | W | | |
| X 440 | 440 | 01 | | FD164 | G1054 | 1 | DF338 | W | | | FD114 | G1396 | DF718 | W | | |
| X 440 S | 440 | 01 | | FD164 | G1054 | 1 | DF338 | W | | | FD114 | G1396 | DF718 | W | | |
| **CCM** | | | | | | | | | | | | | | | | |
| C-XR 125 M | 125 | 08 | | FD073 | G1054 | 1 | | | | | FD095 | G1396 | | | | |
| C-XR 125 S | 125 | 08 | | FD073 | G1054 | 1 | | | | | FD095 | G1054 | | | | |
| SM 125 | 125 | 08 | | FD187 | G1054 | 1 | | | | | FD145 | G1054 | | | | |
| C-XR 230 E | 230 | 07 | | FD073 | G1054 | 1 | | | | | FD095 | G1054 | | | | |
| C-XR 230 M | 230 | 07 | | FD073 | G1054 | 1 | | | | | FD095 | G1396 | | | | |
| C-XR 230 S | 230 | 07 | | FD073 | G1054 | 1 | | | | | FD095 | G1054 | | | | |
| 404 DS SUPER MOTARD | 404 | 03 | | FD138 | G1054 | 1 | DF677 | W | FLW | FLS | FD165 | G1054 | DF678 | WLL | WS | |
| **CH RACING** | | | | | | | | | | | | | | | | |
| WSM 125 MOTARD | 125 | 05 | | FD133 | G1054 | 1 | | | | | FD065 | G1054 | | | | |
| **CLIPIC** | | | | | | | | | | | | | | | | |
| MINJ 125 | 125 | 06 | | FD065 | G1805 | 1 | | | | | FD065 | G1805 | | | | |
| MINJ 200 | 200 | 06 | | FD065 | G1805 | 1 | | | | | FD065 | G1805 | | | | |
| **CPI** | | | | | | | | | | | | | | | | |
| SUPERMOTO 125 | 125 | 07 | | FD065 | G1054 | 1 | | | | | FD065 | G1054 | | | | |
| **DERBI** | | | | | | | | | | | | | | | | |
| FREEXTER 125 | 125 | 06 | | FD341 | G1054 | 1 | | | | | FD270 | G1054 | | | | |
| SENDA DRD 125 SM 4T 4V | 125 | 09 | | FD220 | G1054 | 1 | | | | | FD252 | G1054 | DF675 | W | | |
| **FACTORY** | | | | | | | | | | | | | | | | |
| YR 125 CB | 125 | 04 | | FD162 | G1054 | 1 | | | | | FD075 | G1396 | | | | |
| YR 250 | 250 | 98 | | FD138 | G1054 | 1 | | | | | FD165 | G1396 | | | | |
| **FANTIC** | | | | | | | | | | | | | | | | |
| 80 K-ROO | 80 | 92 | | FD065 | G1805 | 1 | | | | | FD065 | G1805 | | | | |
| 80 TRIAL | 80 | 92 | | FD065 | G1805 | 1 | | | | | FD065 | G1805 | | | | |



**OE:** Original equipment (original replacement disc) • **OE:** Equipo original (disco de remplazo del original) For other models years previous to 1990 visit **www.galferonline.es** • Para otros modelos anteriores al año 1990 visitar **www.galferonline.es**
For consult TÜV (ABE) type approvals visit **www.galfermoto.com --> DOWNALOAD --> TÜV CERTIFICATIONS** • Para consultar las homologaciones TÜV (ABE) visitar **www.galfermoto.com --> DESCARGAS --> CERTIFICACIONES TÜV**

| BRAND & MODEL • MARCA Y MODELO / MARCA E MODELLO • MARQUE ET MODÉLE | C.C. | YEAR | | FRONT FD MF | FRONT COMPOUND RECOMMENDED | FRONT N° | FRONT DF | FRONT OE | FRONT UPGRADE 1 | FRONT UPGRADE 2 | REAR FD MF | REAR COMPOUND RECOMMENDED | REAR DF | REAR OE | REAR UPGRADE | KITS KG |
|---|---|---|---|---|---|---|---|---|---|---|---|---|---|---|---|---|
| 125 K-ROO | 125 | 92 | | FD065 | G1805 | 1 | | | | | FD065 | G1805 | | | | |
| 125.7 TRIAL | 125 | 90 | | FD065 | G1805 | 1 | | | | | FD065 | G1805 | | | | |
| 125.9 TRIAL | 125 | 90 | | FD065 | G1805 | 1 | | | | | FD065 | G1805 | | | | |
| CABALLERO | 125 | 97 | | FD128 | G1805 | 1 | | | | | FD135 | G1054 | | | | |
| CABALLERO RC 125 | 125 | 94 | 96 | FD074 | G1805 | 1 | | | | | FD048 | G1805 | | | | |
| SUPERSEI MOTARD | 125 | 07 | | FD162 | G1054 | 1 | | | | | FD075 | G1054 | | | | |
| 247 TRIAL | 247 | 90 | | FD065 | G1805 | 1 | | | | | FD065 | G1805 | | | | |
| 249 SECTION | 250 | 95 | | FD065 | G1805 | 1 | DF620 | | | | FD065 | G1805 | DF641 | | | |
| 250 COACH | 250 | 92 | 93 | FD065 | G1805 | 1 | | | | | MF712 | G2165 | - | | | |
| 250 COACH | 250 | 95 | | FD065 | G1805 | 1 | | | | | FD065 | G1805 | | | | |
| 309 TRIAL | 309 | 91 | | FD065 | G1805 | 1 | | | | | FD065 | G1805 | | | | |
| **GARELLI** | | | | | | | | | | | | | | | | |
| 125 TRIAL SECTION | 125 | 95 | | FD065 | G1805 | 1 | | | | | FD065 | G1805 | | | | |
| 249 TRIAL SECTION | 249 | 95 | | FD065 | G1805 | 1 | | | | | FD065 | G1805 | | | | |
| **GAS GAS** | | | | | | | | | | | | | | | | |
| MC 65 | 65 | 06 | | FD224 | G1054 | 1 | | | | | FD224 | G1054 | | | | |
| EC ENDUCROSS BOY | 70 | 99 | | FD225 | G1054 | 1 | | | | | FD225 | G1054 | | | | |
| TXT BOY | 70 | 99 | | FD225 | G1805 | 1 | | | | | FD225 | G1805 | | | | |
| ENDUCROSS 80 | 80 | 94 | | FD138 | G1054 | 1 | | | | | FD074 | G1054 | | | | |
| TXT CADET | 80 | 06 | | FD224 | G1805 | 1 | | | | | FD224 | G1805 | | | | |
| TXT PRO 80 RACING | 80 | 15 | | FD225 | G1805 | 1 | | | | | FD224 | G1805 | | | | |
| TXT ROOKIE | 80 | 03 | 05 | FD225 | G1805 | 1 | | | | | FD225 | G1805 | | | | |
| TXT ROOKIE | 80 | 06 | | FD225 | G1805 | 1 | | | | | FD224 | G1805 | | | | |
| EC 125 | 125 | 94 | 00 | FD138 | G1054 | 1 | DF677 | W | FLW | FLS | FD074 | G1054 | DF678 | WLL | WS | |
| EC 125 | 125 | 01 | 14 | FD164 | G1054 | 1 | DF677 | W | FLW | FLS | FD093 | G1396 | DF678 | WLL | WS | KG677 |
| EC 125 | 125 | 15 | | FD164 | G1396 | 1 | DF677 | W | FLW | FLS | FD286 | G1396 | DF678 | WLL | WS | KG677 |
| EC 125 SIX DAYS | 125 | 11 | | FD164 | G1396 | 1 | DF677 | W | FLW | FLS | FD286 | G1396 | DF678 | WLL | WS | KG677 |
| ENDUCAMP 125 4T | 125 | 05 | | FD162 | G1054 | 1 | DF677 | W | FLW | FLS | FD093 | G1396 | DF678 | WLL | WS | |
| ENDURO TT 125 | 125 | 93 | | FD138 | G1054 | 1 | DF677 | W | FLW | FLS | FD075 | G1396 | DF678 | WLL | WS | |
| HALLEY 125 SM | 125 | 09 | | FD068 | G1054 | 1 | | | | | FD093 | G1054 | | | | |
| JT 12 125 | 125 | 95 | | FD065 | G1805 | 1 | | | | | FD065 | G1805 | | | | |
| MC 125 | 125 | 94 | 00 | FD138 | G1054 | 1 | DF677 | W | FLW | FLS | FD074 | G1054 | DF678 | WLL | WS | |
| MC 125 | 125 | 01 | | FD164 | G1054 | 1 | DF677 | W | FLW | FLS | FD093 | G1396 | DF678 | WLL | WS | KG677 |
| SM 125 | 125 | 01 | 04 | FD107 | G1054 | 1 | | | | | FD093 | G1054 | | | | |
| SM 125 | 125 | 05 | | FD068 | G1054 | 1 | | | | | FD093 | G1054 | | | | |
| TRIAL 125 4T | 125 | 11 | | FD223 | G1805 | 1 | | | | | MF | | - | | | |
| TT 125 | 125 | 95 | | FD138 | G1054 | 1 | DF677 | W | FLW | FLS | FD165 | G1396 | DF678 | WLL | WS | |
| TXT 125 | 125 | 99 | 03 | FD225 | G1805 | 1 | | | | | FD225 | G1805 | | | | |
| TXT 125 | 125 | 04 | | FD223 | G1805 | 1 | | | | | FD224 | G1805 | | | | |
| TXT PRO RACING 125 | 125 | 12 | 13 | FD446 | G1805 | 1 | DF808 | W | | | FD224 | G1805 | DF809 | W | | |
| TXT PRO RACING 125 | 125 | 14 | | FD460 | G1805 | 1 | DF808 | W | | | FD224 | G1805 | DF809 | W | | |
| JTR 140 CONTACT | 140 | 96 | | FD065 | G1805 | 1 | | | | | FD065 | G1805 | | | | |
| JT 16 150 | 150 | 95 | | FD065 | G1805 | 1 | | | | | FD065 | G1805 | | | | |
| JT 160 | 160 | 95 | | FD065 | G1805 | 1 | | | | | FD065 | G1805 | | | | |
| 200 PAMPERA | 200 | 99 | | FD065 | G1054 | 1 | | | | | FD065 | G1054 | | | | |
| EC 200 | 200 | 99 | 00 | FD138 | G1054 | 1 | DF677 | W | FLW | FLS | FD165 | G1396 | DF678 | WLL | WS | |
| EC 200 | 200 | 01 | | FD164 | G1054 | 1 | DF677 | W | FLW | FLS | FD093 | G1396 | DF678 | WLL | WS | KG677 |
| EC 200 SIX DAYS | 200 | 11 | | FD164 | G1396 | 1 | DF677 | W | FLW | FLS | FD286 | G1396 | DF678 | WLL | WS | KG677 |
| TXT 200 | 200 | 99 | | FD225 | G1805 | 1 | | | | | FD225 | G1805 | | | | |
| CONTAC JT 250 | 250 | 94 | | FD065 | G1805 | 1 | | | | | FD065 | G1805 | DF615 | | | |
| CONTAC T25 | 250 | 93 | 93 | FD065 | G1805 | 1 | | | | | FD065 | G1805 | DF615 | | | |
| EC 250 | 250 | 95 | 98 | FD138 | G1054 | 1 | DF677 | W | FLW | FLS | FD075 | G1396 | DF678 | WLL | WS | |
| EC 250 | 250 | 99 | 00 | FD138 | G1054 | 1 | DF677 | W | FLW | FLS | FD165 | G1396 | DF678 | WLL | WS | |
| EC 250 | 250 | 01 | | FD164 | G1054 | 1 | DF677 | W | FLW | FLS | FD093 | G1396 | DF678 | WLL | WS | KG677 |
| EC 250 E | 250 | 11 | | FD164 | G1396 | 1 | DF677 | W | FLW | FLS | FD286 | G1396 | DF678 | WLL | WS | KG677 |
| EC 250 F | 250 | 10 | | FD164 | G1396 | 1 | DF677 | W | FLW | FLS | FD286 | G1396 | DF678 | WLL | WS | KG677 |
| EC 250 FSE | 250 | 01 | | FD164 | G1054 | 1 | DF677 | W | FLW | FLS | FD093 | G1396 | DF678 | WLL | WS | KG677 |
| EC 250 RACING | 250 | 09 | | FD164 | G1396 | 1 | DF677 | W | FLW | FLS | FD093 | G1396 | DF678 | WLL | WS | KG677 |
| EC 250 SIX DAYS | 250 | 11 | | FD164 | G1396 | 1 | DF677 | W | FLW | FLS | FD286 | G1396 | DF678 | WLL | WS | KG677 |
| EC 250 YR | 250 | 12 | | FD164 | G1396 | 1 | DF677 | W | FLW | FLS | FD286 | G1396 | DF678 | WLL | WS | KG677 |
| FSE 250 4T | 250 | 99 | | FD138 | G1054 | 1 | DF677 | W | FLW | FLS | FD165 | G1396 | DF678 | WLL | WS | |
| JT 25 | 250 | 91 | | FD065 | G1805 | 1 | | | | | FD065 | G1805 | DF615 | | | |
| JTR 250 CONTACT | 250 | 96 | | FD065 | G1805 | 1 | | | | | FD065 | G1805 | DF615 | | | |
| MC 250 | 250 | 95 | 98 | FD138 | G1054 | 1 | DF677 | W | FLW | FLS | FD075 | G1396 | DF678 | WLL | WS | |
| MC 250 | 250 | 99 | 00 | FD138 | G1054 | 1 | DF677 | W | FLW | FLS | FD165 | G1396 | DF678 | WLL | WS | |
| MC 250 | 250 | 01 | | FD164 | G1054 | 1 | DF677 | W | FLW | FLS | FD093 | G1396 | DF678 | WLL | WS | KG677 |
| SM 250 | 250 | 01 | | FD107 | G1054 | 1 | | | | | FD093 | G1054 | | | | |
| TT 250 | 250 | 95 | | FD138 | G1054 | 1 | DF677 | W | FLW | FLS | FD165 | G1396 | DF678 | WLL | WS | |
| TXT 250 | 250 | 99 | 02 | FD225 | G1805 | 1 | | | | | FD225 | G1805 | | | | |
| TXT 250 | 250 | 03 | 03 | FD223 | G1805 | 1 | | | | | FD224 | G1805 | | | | |
| TXT 250 | 250 | 04 | | FD223 | G1805 | 1 | DF740 | W | | | FD224 | G1805 | DF741 | W | | |
| TXT PRO RACING 250 | 250 | 12 | 13 | FD446 | G1805 | 1 | DF808 | W | | | FD224 | G1805 | DF809 | W | | |
| TXT PRO RACING 250 | 250 | 14 | | FD460 | G1805 | 1 | DF808 | W | | | FD224 | G1805 | DF809 | W | | |

| BRAND & MODEL • MARCA Y MODELO<br>MARCA E MODELLO • MARQUE ET MODÉLE | C.C. | YEAR | | FRONT FD MF | FRONT COMPOUND RECOMMENDED | FRONT N° | FRONT DF | FRONT OE | FRONT UPGRADE 1 | FRONT UPGRADE 2 | REAR FD MF | REAR COMPOUND RECOMMENDED | REAR DF | REAR OE | REAR UPGRADE | KITS KG |
|---|---|---|---|---|---|---|---|---|---|---|---|---|---|---|---|---|
| JTR 270 CONTACT | 270 | 96 | 97 | FD065 | G1805 | 1 | | | | | FD065 | G1805 | DF615 | | | |
| TXT 270 | 270 | 98 | 98 | FD065 | G1805 | 1 | | | | | FD065 | G1805 | | | | |
| TXT 270 | 270 | 99 | 01 | FD225 | G1805 | 1 | | | | | FD225 | G1805 | | | | |
| TXT 280 | 280 | 00 | 02 | FD225 | G1805 | 1 | | | | | FD225 | G1805 | | | | |
| TXT 280 | 280 | 03 | 03 | FD223 | G1805 | 1 | | | | | FD224 | G1805 | | | | |
| TXT 280 | 280 | 04 | | FD223 | G1805 | 1 | DF740 | W | | | FD224 | G1805 | DF741 | W | | |
| TXT PRO RACING 280 | 280 | 12 | 13 | FD446 | G1805 | 1 | DF808 | W | | | FD224 | G1805 | DF809 | W | | |
| TXT PRO RACING 280 | 280 | 14 | | FD460 | G1805 | 1 | DF808 | W | | | FD224 | G1805 | DF809 | W | | |
| EC 300 | 300 | 99 | 00 | FD138 | G1054 | 1 | DF677 | W | FLW | FLS | FD165 | G1396 | DF678 | WLL | WS | |
| EC 300 | 300 | 01 | | FD164 | G1054 | 1 | DF677 | W | FLW | FLS | FD093 | G1396 | DF678 | WLL | WS | KG677 |
| EC 300 E | 300 | 11 | | FD164 | G1396 | 1 | DF677 | W | FLW | FLS | FD286 | G1396 | DF678 | WLL | WS | KG677 |
| EC 300 F | 300 | 15 | | FD164 | G1396 | 1 | DF677 | W | FLW | FLS | FD286 | G1396 | DF678 | WLL | WS | KG677 |
| EC 300 RACING | 300 | 09 | | FD164 | G1396 | 1 | DF677 | W | FLW | FLS | FD286 | G1396 | DF678 | WLL | WS | KG677 |
| EC 300 SIX DAYS | 300 | 11 | | FD164 | G1396 | 1 | DF677 | W | FLW | FLS | FD286 | G1396 | DF678 | WLL | WS | KG677 |
| TXT 300 | 300 | 04 | | FD223 | G1805 | 1 | DF740 | W | | | FD224 | G1805 | DF741 | W | | |
| TXT PRO RACING 300 | 300 | 14 | | FD460 | G1805 | 1 | DF808 | W | | | FD224 | G1805 | DF809 | W | | |
| JT 32 | 320 | 91 | | FD065 | G1805 | 1 | | | | | FD065 | G1805 | | | | |
| TXT 321 | 321 | 99 | | FD225 | G1805 | 1 | | | | | FD225 | G1805 | | | | |
| JT 350 | 350 | 95 | | FD065 | G1805 | 1 | | | | | FD065 | G1805 | | | | |
| JTR 370 CONTACT | 370 | 96 | | FD065 | G1805 | 1 | | | | | FD065 | G1805 | DF615 | | | |
| EC 400 FSE | 400 | 99 | 00 | FD138 | G1054 | 1 | DF677 | W | FLW | FLS | FD165 | G1396 | DF678 | WLL | WS | |
| EC 400 FSE | 400 | 01 | | FD164 | G1054 | 1 | DF677 | W | FLW | FLS | FD093 | G1396 | DF607 | W | WLL | KG677 |
| ENDUCAMP 400 4T | 400 | 05 | | FD162 | G1054 | 1 | DF677 | W | FLW | FLS | FD093 | G1396 | DF678 | WLL | WS | |
| PAMPERA 400 | 400 | 06 | | FD164 | G1396 | 1 | DF677 | W | FLW | FLS | FD093 | G1396 | DF678 | WLL | WS | KG677 |
| SM 400 | 400 | 01 | | FD107 | G1054 | 1 | | | | | FD093 | G1054 | | | | |
| EC 450 F | 450 | 15 | | FD164 | G1396 | 1 | DF677 | W | FLW | FLS | FD286 | G1396 | DF678 | WLL | WS | KG677 |
| EC 450 FSE | 450 | 03 | | FD164 | G1396 | 1 | DF677 | W | FLW | FLS | FD093 | G1396 | DF678 | WLL | WS | KG677 |
| EC 450 RAID | 450 | 15 | | FD164 | G1396 | 1 | DF677 | CW | | | FD286 | G1396 | DF678 | WLL | WS | |
| FSR 450 | 450 | 07 | | FD068 | G1054 | 1 | | | | | FD093 | G1054 | DF678 | WLL | WS | |
| HALLEY 450 SM | 450 | 09 | | FD409 | G1054 | 1 | DF677 | W | FLW | FLS | FD093 | G1054 | DF678 | WLL | WS | |
| SM 450 | 450 | 05 | | FD068 | G1054 | 1 | | | | | FD093 | G1054 | DF678 | WLL | WS | |
| **HM** | | | | | | | | | | | | | | | | |
| DERAPAGE RR | 50 | 09 | | FD162 | G1054 | 1 | DF699 | W | FLW | | FD278 | G1054 | DF889 | W | | |
| CR 125 MOTARD | 125 | 03 | 06 | FD164 | G1054 | 1 | | | | | FD278 | G1054 | DF069 | W | WLL | |
| CRE 125 R | 125 | 03 | | FD164 | G1396 | 1 | DF014 | W | FLW | FLS | FD278 | G1396 | DF069 | W | WLL | KG014 |
| CRM 125 R | 125 | 07 | | FD304 | G1054 | 1 | DF014 | W | FLW | | FD278 | G1054 | DF069 | W | WLL | |
| CRM F 125 X | 125 | 08 | | FD162 | G1054 | 1 | | | | | FD278 | G1054 | DF010 | W | | |
| DERAPAGE 2T | 125 | 11 | | FD409 | G1054 | 1 | DF751 | W | FLW | | FD286 | G1054 | | | | |
| DERAPAGE 2T COMPETICION | 125 | 11 | | FD304 | G1054 | 1 | DF751 | W | FLW | | FD286 | G1054 | | | | |
| DERAPAGE 4T | 125 | 11 | | FD087 | G1054 | 1 | DF699 | W | FLW | | FD252 | G1054 | DF889 | W | | |
| CRF 150 R / R2 | 150 | 08 | | FD076 | G1396 | 1 | DF050 | W | | | FD278 | G1396 | DF047 | W | | |
| EASY 230 F ENDURO | 230 | 04 | | FD164 | G1396 | 1 | | | | | FD278 | G1396 | DF069 | W | WLL | |
| EASY 230 F MOTARD | 230 | 04 | | FD164 | G1054 | 1 | | | | | FD278 | G1054 | DF069 | W | WLL | |
| EASY 230 F TRAIL | 230 | 04 | | FD164 | G1054 | 1 | | | | | MF | | - | | | |
| EASY 230 F TRAIL ID | 230 | 04 | | FD164 | G1054 | 1 | | | | | FD278 | G1054 | DF069 | W | WLL | |
| CR 250 MOTARD | 250 | 03 | | FD164 | G1054 | 1 | | | | | FD278 | G1054 | DF069 | W | WLL | |
| CRE 250 F | 250 | 03 | | FD164 | G1396 | 1 | DF014 | W | FLW | FLS | FD278 | G1396 | DF069 | W | WLL | KG014 |
| CRE 250 R | 250 | 03 | | FD164 | G1396 | 1 | DF014 | W | FLW | FLS | FD278 | G1396 | DF069 | W | WLL | KG014 |
| CRE 250 X | 250 | 09 | | FD164 | G1396 | 1 | DF014 | W | FLW | FLS | FD278 | G1396 | DF069 | W | WLL | KG014 |
| CRF 250 MOTARD | 250 | 03 | 06 | FD164 | G1054 | 1 | | | | | FD278 | G1054 | DF069 | W | WLL | |
| CRF 250 R | 250 | 09 | | FD164 | G1396 | 1 | DF014 | W | FLW | FLS | FD278 | G1396 | DF069 | W | WLL | KG014 |
| CRM 250 X | 250 | 07 | | FD304 | G1054 | 1 | DF014 | W | FLW | | FD278 | G1396 | DF069 | W | WLL | |
| CRE 300 X | 300 | 09 | | FD164 | G1396 | 1 | DF014 | W | FLW | FLS | FD278 | G1396 | DF069 | W | WLL | KG014 |
| CRE 450 F | 450 | 03 | | FD164 | G1396 | 1 | DF014 | W | FLW | FLS | FD278 | G1396 | DF069 | W | WLL | KG014 |
| CRE 450 R | 450 | 09 | | FD164 | G1396 | 1 | DF014 | W | FLW | FLS | FD278 | G1396 | DF069 | W | WLL | KG014 |
| CRE 450 X | 450 | 09 | | FD164 | G1396 | 1 | DF014 | W | FLW | FLS | FD278 | G1396 | DF069 | W | WLL | KG014 |
| CRF 450 MOTARD | 450 | 03 | | FD164 | G1054 | 1 | | | | | FD278 | G1396 | DF069 | W | WLL | |
| CRF 450 R | 450 | 09 | | FD164 | G1396 | 1 | DF014 | W | FLW | FLS | FD278 | G1396 | DF069 | W | WLL | KG014 |
| CRM F 450 R | 450 | 09 | | FD304 | G1054 | 1 | DF014 | W | FLW | | FD278 | G1054 | DF069 | W | WLL | |
| CRM F 450 X | 450 | 09 | | FD304 | G1054 | 1 | DF014 | W | FLW | | FD278 | G1054 | DF069 | W | WLL | |
| CRE F 490 X | 490 | 07 | | FD164 | G1396 | 1 | DF014 | W | FLW | FLS | FD278 | G1396 | DF069 | W | WLL | KG014 |
| CRM F 490 X | 490 | 07 | | FD304 | G1054 | 1 | DF014 | W | FLW | | FD278 | G1054 | DF069 | W | WLL | |
| CRE 500 X | 500 | 09 | | FD164 | G1396 | 1 | DF014 | W | FLW | FLS | FD278 | G1396 | DF069 | W | WLL | KG014 |
| **HONDA** | | | | | | | | | | | | | | | | |
| CRF 50 F | 50 | 04 | | MF010 | G2165 | | - | | | | MF010 | G2165 | - | | | |
| CRF 70 F | 70 | 04 | | MF001 | G2165 | | - | | | | MF001 | G2165 | - | | | |
| CR 80 R | 80 | 90 | 96 | FD095 | G1054 | 1 | | | | | FD093 | G1396 | DF047 | W | | |
| CR 80 R | 80 | 97 | 02 | FD076 | G1054 | 1 | DF050 | W | | | FD093 | G1396 | DF047 | W | | |
| CRF 80 F | 80 | 04 | | MF001 | G2165 | | - | | | | MF001 | G2165 | - | | | |
| CR 85 R | 85 | 03 | 05 | FD076 | G1396 | 1 | DF050 | W | | | FD093 | G1396 | DF047 | W | | |
| CR 85 R | 85 | 06 | | FD076 | G1396 | 1 | DF050 | W | | | FD093 | G1396 | DF047 | W | | |
| CRF 100 F | 100 | 04 | | MF001 | G2165 | | - | | | | MF001 | G2165 | - | | | |
| CR 125 ENDURO | 125 | 91 | | FD092 | G1054 | 1 | DF001 | | | | FD093 | G1396 | DF003 | W | | |



**OE:** Original equipment (original replacement disc) • **OE:** Equipo original (disco de remplazo del original) For other models years previous to 1990 visit **www.galferonline.es** • Para otros modelos anteriores al año 1990 visitar **www.galferonline.es**
For consult TÜV (ABE) type approvals visit **www.galfermoto.com --> DOWNALOAD --> TÜV CERTIFICATIONS** • Para consultar las homologaciones TÜV (ABE) visitar **www.galfermoto.com --> DESCARGAS --> CERTIFICACIONES TÜV**

| BRAND & MODEL • MARCA Y MODELO / MARCA E MODELLO • MARQUE ET MODÉLE | C.C. | YEAR | | FRONT FD MF | FRONT COMPOUND RECOMMENDED | FRONT N° | FRONT DF | FRONT OE | FRONT UPGRADE 1 | FRONT UPGRADE 2 | REAR FD MF | REAR COMPOUND RECOMMENDED | REAR DF | REAR OE | REAR UPGRADE | KITS KG |
|---|---|---|---|---|---|---|---|---|---|---|---|---|---|---|---|---|
| CR 125 R | 125 | 92 | 93 | FD092 | G1054 | 1 | DF017 | W | | | FD093 | G1396 | DF011 | W | | |
| CR 125 R | 125 | 94 | 94 | FD164 | G1054 | 1 | DF017 | W | | | FD093 | G1396 | DF003 | W | | |
| CR 125 R | 125 | 95 | 97 | FD164 | G1054 | 1 | DF014 | W | FLW | FLS | FD093 | G1396 | DF003 | W | | KG014 |
| CR 125 R | 125 | 98 | 01 | FD164 | G1054 | 1 | DF014 | W | FLW | FLS | FD093 | G1396 | DF039 | W | | KG014 |
| CR 125 R | 125 | 02 | 04 | FD164 | G1054 | 1 | DF014 | W | FLW | FLS | FD278 | G1396 | DF069 | W | WLL | KG014 |
| CR 125 R | 125 | 05 | 07 | FD164 | G1396 | 1 | DF014 | W | FLW | FLS | FD278 | G1396 | DF069 | W | WLL | KG014 |
| CRF 150 F | 150 | 03 | 06 | FD164 | G1396 | 1 | DF017 | W | | | MF003 | G2165 | - | | | |
| CRF 150 R | 150 | 07 | | FD076 | G1396 | 1 | DF050 | W | | | FD278 | G1396 | DF047 | W | | |
| FTR 223 | 223 | 00 | 02 | FD284 | G1054 | 1 | | | | | MF | | - | | | |
| CRF 230 F | 230 | 04 | | FD164 | G1396 | 1 | DF017 | W | | | MF003 | G2165 | - | | | |
| CRF 230 L | 230 | 08 | | FD164 | G1396 | 1 | DF017 | W | | | FD278 | G1396 | DF048 | W | | |
| CRF 230 M | 230 | 09 | | FD164 | G1054 | 1 | DF017 | W | | | FD278 | G1054 | DF048 | W | | |
| CR 250 ENDURO | 250 | 91 | | FD092 | G1054 | 1 | DF017 | W | | | FD093 | G1396 | DF048 | W | | |
| CR 250 R | 250 | 90 | 91 | FD092 | G1054 | 1 | DF001 | | | | FD093 | G1396 | DF003 | W | | |
| CR 250 R | 250 | 92 | 94 | FD164 | G1054 | 1 | DF017 | W | | | FD093 | G1396 | DF003 | W | | |
| CR 250 R | 250 | 95 | 96 | FD164 | G1054 | 1 | DF014 | W | FLW | FLS | FD093 | G1396 | DF003 | W | | KG014 |
| CR 250 R | 250 | 97 | 01 | FD164 | G1054 | 1 | DF014 | W | FLW | FLS | FD093 | G1396 | DF039 | W | | KG014 |
| CR 250 R | 250 | 02 | 04 | FD164 | G1054 | 1 | DF014 | W | FLW | FLS | FD278 | G1396 | DF069 | W | WLL | KG014 |
| CR 250 R | 250 | 05 | 07 | FD164 | G1396 | 1 | DF014 | W | FLW | FLS | FD278 | G1396 | DF069 | W | WLL | KG014 |
| CRE 250 | 250 | 90 | | FD092 | G1054 | 1 | | | | | FD093 | G1396 | | | | |
| CRF 250 M | 250 | 14 | | FD409 | G1054 | 1 | | | | | | | | | | |
| CRF 250 R | 250 | 04 | 07 | FD164 | G1396 | 1 | DF014 | W | FLW | FLS | FD278 | G1396 | DF069 | W | WLL | KG014 |
| CRF 250 R | 250 | 08 | 14 | FD164 | G1396 | 1 | DF014 | W | FLW | FLS | FD278 | G1396 | DF069 | W | WLL | KG014 |
| CRF 250 R | 250 | 15 | | FD164 | G1396 | 1 | DF082 | W | FLW | FLS | FD278 | G1396 | DF069 | W | WLL | KG082 |
| CRF 250 X | 250 | 04 | | FD164 | G1396 | 1 | DF014 | W | FLW | FLS | FD278 | G1396 | DF069 | W | WLL | KG014 |
| CRF 250 XR LD | 250 | 13 | | FD164 | G1396 | 1 | DF014 | W | FLW | FLS | FD278 | G1396 | DF069 | W | WLL | KG014 |
| CRM 250 R | 250 | 92 | | FD092 | G1054 | 1 | DF017 | W | | | FD093 | G1396 | | | | |
| XR 250 L, R | 250 | 91 | 93 | FD164 | G1054 | 1 | DF017 | W | | | FD093 | G1396 | DF048 | W | | |
| XR 250 MOTARD | 250 | 03 | | FD164 | G1054 | 1 | | | | | FD093 | G1054 | DF048 | W | | |
| XR 250 R | 250 | 94 | 02 | FD164 | G1054 | 1 | DF017 | W | | | FD093 | G1396 | DF048 | W | | |
| XR 250 R | 250 | 03 | | FD164 | G1396 | 1 | DF017 | W | | | FD278 | G1396 | DF048 | W | | |
| XR 400 MOTARD (DF017SM) | 400 | 05 | | FD266 | G1054 | 1 | DF017 | W | | | FD093 | G1054 | DF048 | W | | |
| XR 400 R | 400 | 96 | | FD164 | G1054 | 1 | DF017 | W | | | FD093 | G1396 | DF048 | W | | |
| CRF 450 F/R | 450 | 01 | 03 | FD164 | G1054 | 1 | DF014 | W | FLW | FLS | FD278 | G1396 | DF039 | W | | KG014 |
| CRF 450 F/R | 450 | 04 | 07 | FD164 | G1396 | 1 | DF014 | W | FLW | FLS | FD278 | G1396 | DF069 | W | WLL | KG014 |
| CRF 450 F/R | 450 | 08 | 14 | FD164 | G1396 | 1 | DF014 | W | FLW | FLS | FD278 | G1396 | DF069 | W | WLL | KG014 |
| CRF 450 R | 450 | 15 | | FD164 | G1396 | 1 | DF082 | W | FLW | FLS | FD278 | G1396 | DF069 | W | WLL | KG082 |
| CRF 450 RALLY | 450 | 13 | | FD164 | G1396 | 1 | | | | | FD278 | G1396 | | | | |
| CRF 450 X | 450 | 04 | | FD164 | G1396 | 1 | DF014 | W | FLW | FLS | FD278 | G1396 | DF069 | W | WLL | KG014 |
| CRF 450 XR LD | 450 | 13 | | FD164 | G1396 | 1 | DF014 | W | FLW | FLS | FD278 | G1396 | DF069 | W | WLL | KG014 |
| CR 500 ENDURO | 500 | 91 | | FD092 | G1054 | 1 | DF001 | | | | FD093 | G1396 | DF003 | W | | |
| CR 500 R | 500 | 90 | 92 | FD092 | G1054 | 1 | DF001 | | | | FD093 | G1396 | DF003 | W | | |
| CR 500 R | 500 | 92 | 94 | FD164 | G1054 | 1 | DF017 | W | | | FD093 | G1396 | DF003 | W | | |
| CR 500 R | 500 | 95 | 00 | FD164 | G1054 | 1 | DF014 | W | FLW | FLS | FD093 | G1396 | DF003 | W | | KG014 |
| XR 600 R | 600 | 91 | 92 | FD092 | G1054 | 1 | DF017 | W | | | FD093 | G1396 | DF048 | W | | |
| XR 600 R | 600 | 93 | | FD164 | G1054 | 1 | DF017 | W | | | FD093 | G1396 | DF048 | W | | |
| XR 650 R | 650 | 00 | | FD164 | G1054 | 1 | DF017 | W | | | FD093 | G1396 | DF060 | W | | |
| **HUSABERG** | | | | | | | | | | | | | | | | |
| 125 TE | 125 | 11 | | FD138 | G1396 | 1 | DF606 | W | FLW | FLS | FD291 | G1396 | DF607 | W | WLL | KG606 |
| 250 FE | 250 | 13 | | FD138 | G1396 | 1 | DF606 | W | FLW | FLS | FD291 | G1396 | DF607 | W | WLL | KG606 |
| 250 TE | 250 | 11 | | FD138 | G1396 | 1 | DF606 | W | FLW | FLS | FD291 | G1396 | DF607 | W | WLL | KG606 |
| 300 TE | 300 | 11 | | FD138 | G1396 | 1 | DF606 | W | FLW | FLS | FD291 | G1396 | DF607 | W | WLL | KG606 |
| 350 FC | 350 | 95 | 99 | FD138 | G1054 | 1 | DF626 | FLW | | | FD165 | G1396 | | | | |
| 350 FE | 350 | 95 | 99 | FD138 | G1054 | 1 | DF626 | FLW | | | FD165 | G1396 | | | | |
| 350 FE | 350 | 13 | | FD138 | G1396 | 1 | DF606 | W | FLW | FLS | FD291 | G1396 | DF607 | W | WLL | KG606 |
| 350 MC | 350 | 91 | 92 | FD089 | G1054 | 1 | | | | | FD075 | G1396 | | | | |
| 350 MC | 350 | 94 | | FD089 | G1054 | 1 | | | | | FD165 | G1396 | | | | |
| 390 FE | 390 | 10 | | FD138 | G1396 | 1 | DF606 | W | FLW | FLS | FD291 | G1396 | DF607 | W | WLL | KG606 |
| 400 FE | 400 | 00 | | FD138 | G1054 | 1 | DF606 | W | FLW | FLS | FD165 | G1396 | DF607 | W | WLL | |
| 450 FC/FE | 450 | 04 | | FD138 | G1396 | 1 | DF606 | W | FLW | FLS | FD165 | G1396 | DF607 | W | WLL | |
| 450 FE | 450 | 12 | | FD138 | G1396 | 1 | DF606 | W | FLW | FLS | FD291 | G1396 | DF607 | W | WLL | KG606 |
| 450 FS | 450 | 04 | 04 | FD068 | G1054 | 1 | | | | | FD165 | G1054 | DF607 | W | WLL | |
| 450 FSE | 450 | 05 | | | | 1 | | | | | FD165 | G1396 | DF607 | W | WLL | |
| 450 FX | 450 | 10 | | FD138 | G1396 | 1 | DF606 | W | FLW | FLS | FD291 | G1396 | DF607 | W | WLL | KG606 |
| 500 CROSS | 500 | 93 | 93 | FD138 | G1054 | 1 | | | | | FD075 | G1396 | | | | |
| 500 MC | 500 | 91 | 92 | FD089 | G1054 | 1 | | | | | FD075 | G1396 | | | | |
| 501 FC | 501 | 95 | 99 | FD138 | G1054 | 1 | DF626 | FLW | | | FD165 | G1396 | | | | |
| 501 FE | 501 | 95 | 99 | FD138 | G1054 | 1 | DF626 | FLW | | | FD165 | G1396 | | | | |
| 501 FE | 501 | 13 | | FD138 | G1396 | 1 | DF606 | W | FLW | FLS | FD291 | G1396 | DF607 | W | WLL | KG606 |
| 501 MC | 501 | 94 | 99 | FD089 | G1054 | 1 | | | | | FD165 | G1396 | | | | |
| 501 MC ENDURO | 501 | 91 | 92 | FD089 | G1054 | 1 | | | | | FD075 | G1396 | | | | |
| 550 FC/FE | 550 | 04 | | FD138 | G1396 | 1 | DF606 | W | FLW | FLS | FD165 | G1396 | DF607 | W | WLL | |
| 570 FE | 570 | 09 | | FD138 | G1396 | 1 | DF606 | W | FLW | FLS | FD291 | G1396 | DF607 | W | WLL | KG606 |

| BRAND & MODEL • MARCA Y MODELO<br>MARCA E MODELLO • MARQUE ET MODÉLE | C.C. | YEAR | | FRONT FD MF | FRONT COMPOUND RECOMMENDED | FRONT N° | FRONT DF | FRONT OE | FRONT UPGRADE 1 | FRONT UPGRADE 2 | REAR FD MF | REAR COMPOUND RECOMMENDED | REAR DF | REAR OE | REAR UPGRADE | KITS KG |
|---|---|---|---|---|---|---|---|---|---|---|---|---|---|---|---|---|
| 600 FC | 600 | 95 | 99 | FD138 | G1054 | 1 | DF626 | FLW | | | FD165 | G1396 | | | | |
| 600 FE | 600 | 95 | 99 | FD138 | G1054 | 1 | DF626 | FLW | | | FD165 | G1396 | | | | |
| 650 FC/FE | 650 | 04 | | FD138 | G1396 | 1 | DF606 | W | FLW | FLS | FD165 | G1396 | DF607 | W | WLL | |
| **HUSQVARNA** | | | | | | | | | | | | | | | | |
| 50 CR SENIOR PRO | 50 | 05 | | FD224 | G1054 | 1 | | | | | FD230 | G1396 | | | | |
| CR 50 | 50 | 11 | | FD230 | G1396 | 1 | | | | | FD230 | G1396 | | | | |
| SM 50 | 50 | 11 | | FD230 | G1054 | 1 | | | | | FD230 | G1054 | | | | |
| 65 CR | 65 | 11 | | FD265 | G1396 | 1 | DF872 | W | | | FD441 | G1396 | DF873 | W | | |
| 85 TC 17/14 | 85 | 14 | | FD458 | G1396 | 1 | DF777 | W | | | FD441 | G1396 | DF797 | W | | |
| 85 TC 19/16 | 85 | 14 | | FD458 | G1396 | 1 | DF794 | W | | | FD441 | G1396 | DF797 | W | | |
| 100 TE | 100 | 05 | | FD224 | G1054 | 1 | | | | | FD230 | G1396 | | | | |
| 125 CR | 125 | 91 | 91 | FD089 | G1054 | 1 | | | | | FD075 | G1396 | DF638 | W | | |
| 125 CR | 125 | 94 | 99 | FD138 | G1054 | 1 | DF626 | FLW | | | FD165 | G1396 | DF638 | W | | |
| 125 CR | 125 | 93 | 99 | FD086 | G1054 | 1 | DF626 | FLW | | | FD075 | G1396 | DF638 | W | | |
| 125 CR | 125 | 00 | 03 | FD138 | G1054 | 1 | DF635 | FLW | FLS | FRS | FD165 | G1396 | DF885 | W | PW | |
| 125 CR | 125 | 04 | 04 | FD138 | G1396 | 1 | DF635 | FLW | FLS | FRS | FD291 | G1396 | DF885 | W | PW | |
| 125 CR | 125 | 05 | | FD138 | G1396 | 1 | DF635 | FLW | FLS | FRS | FD291 | G1396 | DF670 | W | PW | |
| 125 CR, WR | 125 | 93 | 99 | FD086 | G1054 | 1 | DF626 | FLW | | | FD075 | G1396 | DF638 | W | | |
| 125 SM S | 125 | 00 | | FD138 | G1054 | 1 | DF635 | FLW | FLS | FRS | FD165 | G1396 | DF885 | W | PW | |
| 125 SM S 4T | 125 | 11 | | FD138 | G1396 | 1 | DF635 | FLW | FLS | FRS | FD165 | G1396 | DF885 | W | PW | |
| 125 TC | 125 | 14 | | FD138 | G1396 | 1 | DF606 | W | FLW | FLS | FD291 | G1396 | DF607 | W | WLL | KG606 |
| 125 TE | 125 | 14 | | FD138 | G1396 | 1 | DF606 | W | FLW | FLS | FD291 | G1396 | DF607 | W | WLL | KG606 |
| 125 TE 4T | 125 | 11 | 13 | FD138 | G1396 | 1 | DF635 | FLW | FLS | FRS | FD165 | G1396 | DF885 | W | PW | |
| 125 WR | 125 | 91 | | FD089 | G1054 | 1 | | | | | FD075 | G1396 | DF638 | W | | |
| 125 WR | 125 | 94 | 99 | FD138 | G1054 | 1 | DF626 | FLW | | | FD165 | G1396 | DF638 | W | | |
| 125 WR | 125 | 93 | 99 | FD086 | G1054 | 1 | DF626 | FLW | | | FD075 | G1396 | DF638 | W | | |
| 125 WR | 125 | 00 | 05 | FD138 | G1054 | 1 | DF635 | FLW | FLS | FRS | FD165 | G1396 | DF885 | W | PW | |
| 125 WR | 125 | 06 | | FD138 | G1396 | 1 | DF635 | FLW | FLS | FRS | FD291 | G1396 | DF670 | W | PW | |
| 125 WRE | 125 | 94 | 99 | FD138 | G1054 | 1 | DF626 | FLW | | | FD165 | G1396 | DF638 | W | | |
| 125 WRE | 125 | 00 | | FD138 | G1054 | 1 | DF635 | FLW | FLS | FRS | FD165 | G1396 | DF885 | W | PW | |
| 125 WXE | 125 | 07 | | FD133 | G1054 | 1 | DF635 | FLW | FLS | FRS | FD093 | G1396 | | | | |
| 250 CR | 250 | 91 | | FD089 | G1054 | 1 | | | | | FD075 | G1396 | DF638 | W | | |
| 250 CR | 250 | 94 | 99 | FD138 | G1054 | 1 | DF626 | FLW | | | FD165 | G1396 | DF638 | W | | |
| 250 CR | 250 | 00 | 03 | FD138 | G1054 | 1 | DF635 | FLW | FLS | FRS | FD165 | G1396 | DF885 | W | PW | |
| 250 CR | 250 | 04 | 04 | FD138 | G1396 | 1 | DF635 | FLW | FLS | FRS | FD291 | G1396 | DF885 | W | PW | |
| 250 CR | 250 | 05 | | FD138 | G1396 | 1 | DF635 | FLW | FLS | FRS | FD291 | G1396 | DF670 | W | PW | |
| 250 CR, WR | 250 | 93 | 99 | FD086 | G1054 | 1 | DF626 | FLW | | | FD075 | G1396 | DF638 | W | | |
| 250 FC | 250 | 14 | | FD138 | G1396 | 1 | DF606 | W | FLW | FLS | FD291 | G1396 | DF607 | W | WLL | KG606 |
| 250 FE | 250 | 14 | | FD138 | G1396 | 1 | DF606 | W | FLW | FLS | FD291 | G1396 | DF607 | W | WLL | KG606 |
| 250 TC | 250 | 04 | 04 | FD138 | G1396 | 1 | DF635 | FLW | FLS | FRS | FD291 | G1396 | DF885 | W | PW | |
| 250 TC | 250 | 05 | 13 | FD138 | G1396 | 1 | DF635 | FLW | FLS | FRS | FD291 | G1396 | DF670 | W | PW | |
| 250 TC | 250 | 14 | | FD138 | G1396 | 1 | DF606 | W | FLW | FLS | FD291 | G1396 | DF607 | W | WLL | KG606 |
| 250 TE | 250 | 05 | | FD138 | G1396 | 1 | DF635 | FLW | FLS | FRS | FD291 | G1396 | DF885 | W | PW | |
| 250 TE | 250 | 14 | | FD138 | G1396 | 1 | DF606 | W | FLW | FLS | FD291 | G1396 | DF607 | W | WLL | KG606 |
| 250 TE R | 250 | 13 | 13 | FD138 | G1396 | 1 | DF635 | FLW | FLS | FRS | FD291 | G1396 | DF885 | W | PW | |
| 250 WR | 250 | 91 | | FD089 | G1054 | 1 | | | | | FD075 | G1396 | DF638 | W | | |
| 250 WR | 250 | 94 | 99 | FD138 | G1054 | 1 | DF626 | FLW | | | FD165 | G1396 | DF638 | W | | |
| 250 WR | 250 | 00 | | FD138 | G1054 | 1 | DF635 | FLW | FLS | FRS | FD165 | G1396 | DF885 | W | PW | |
| 260 WR | 260 | 91 | | FD089 | G1054 | 1 | | | | | FD075 | G1396 | DF638 | W | | |
| 300 TE | 300 | 14 | | FD138 | G1396 | 1 | DF606 | W | FLW | FLS | FD291 | G1396 | DF607 | W | WLL | KG606 |
| 300 WR | 300 | 09 | | FD138 | G1396 | 1 | DF635 | FLW | FLS | FRS | FD291 | G1396 | DF885 | W | PW | |
| 310 TE | 310 | 09 | | FD138 | G1396 | 1 | DF635 | FLW | FLS | FRS | FD291 | G1396 | DF670 | W | PW | |
| 310 TE R | 310 | 13 | | FD138 | G1396 | 1 | DF635 | FLW | FLS | FRS | FD291 | G1396 | DF670 | W | PW | |
| 350 FC | 350 | 14 | | FD138 | G1396 | 1 | DF606 | W | FLW | FLS | FD291 | G1396 | DF607 | W | WLL | KG606 |
| 350 FE | 350 | 14 | | FD138 | G1396 | 1 | DF606 | W | FLW | FLS | FD291 | G1396 | DF607 | W | WLL | KG606 |
| 350 TE | 350 | 94 | 99 | FD138 | G1054 | 1 | DF626 | FLW | | | FD165 | G1396 | DF638 | W | | |
| 350 TE 4T | 350 | 91 | 94 | FD089 | G1054 | 1 | DF626 | FLW | | | FD075 | G1396 | DF638 | W | | |
| 360 CR | 360 | 92 | 94 | FD089 | G1054 | 1 | DF626 | FLW | | | FD075 | G1396 | DF638 | W | | |
| 360 CR | 360 | 94 | 99 | FD138 | G1054 | 1 | DF626 | FLW | | | FD165 | G1396 | DF638 | W | | |
| 360 WR | 360 | 92 | 94 | FD086 | G1054 | 1 | DF626 | FLW | | | FD076 | G1396 | DF638 | W | | |
| 360 WR | 360 | 94 | 99 | FD138 | G1054 | 1 | DF626 | FLW | | | FD165 | G1396 | DF638 | W | | |
| 360 WR | 360 | 00 | | FD138 | G1054 | 1 | DF635 | FLW | FLS | FRS | FD165 | G1396 | DF885 | W | PW | |
| 401 SVARTPILEN | 390 | 15 | | FD450 | G1054 | 1 | | | | | | | | | | |
| TE 410 | 410 | 94 | 99 | FD138 | G1054 | 1 | DF626 | FLW | | | FD165 | G1396 | DF638 | W | | |
| TE 410/E | 410 | 00 | | FD138 | G1054 | 1 | DF635 | FLW | FLS | FRS | FD165 | G1396 | DF885 | W | PW | |
| 449 TE | 449 | 11 | | FD138 | G1396 | 1 | DF635 | FLW | FLS | FRS | FD291 | G1396 | DF670 | W | PW | |
| 450 FC | 450 | 14 | | FD138 | G1396 | 1 | DF606 | W | FLW | FLS | FD291 | G1396 | DF607 | W | WLL | KG606 |
| 450 FE | 450 | 14 | | FD138 | G1396 | 1 | DF606 | W | FLW | FLS | FD291 | G1396 | DF607 | W | WLL | KG606 |
| 450 SM / RR | 450 | 06 | | FD262 | G1054 | 1 | DF645 | CW | | | FD291 | G1054 | DF885 | W | PW | |
| 450 SM R | 450 | 01 | 04 | FD068 | G1054 | 1 | DF645 | CW | | | FD165 | G1054 | DF885 | W | PW | |
| 450 SM R | 450 | 05 | 05 | FD262 | G1054 | 1 | DF645 | CW | | | FD165 | G1054 | DF885 | W | PW | |
| 450 SM S | 450 | 01 | 04 | FD176 | G1054 | 1 | DF645 | CW | | | FD165 | G1054 | DF885 | W | PW | |
| 450 TC | 450 | 05 | | FD138 | G1396 | 1 | DF635 | FLW | FLS | FRS | FD291 | G1396 | DF670 | W | PW | |



**OE:** Original equipment (original replacement disc) • **OE:** Equipo original (disco de remplazo del original) For other models years previous to 1990 visit **www.galferonline.es** • Para otros modelos anteriores al año 1990 visitar **www.galferonline.es**
For consult TÜV (ABE) type approvals visit **www.galfermoto.com --> DOWNALOAD --> TÜV CERTIFICATIONS** • Para consultar las homologaciones TÜV (ABE) visitar **www.galfermoto.com --> DESCARGAS --> CERTIFICACIONES TÜV**

| BRAND & MODEL • MARCA Y MODELO<br>MARCA E MODELLO • MARQUE ET MODÉLE | C.C. | YEAR | | FRONT FD MF | FRONT COMPOUND RECOMMENDED | FRONT N° | FRONT DF | FRONT OE | FRONT UPGRADE 1 | FRONT UPGRADE 2 | REAR FD MF | REAR COMPOUND RECOMMENDED | REAR DF | REAR OE | REAR UPGRADE | KITS KG |
|---|---|---|---|---|---|---|---|---|---|---|---|---|---|---|---|---|
| 450 TE | 450 | 05 | | FD138 | G1396 | 1 | DF635 | FLW | FLS | FRS | FD291 | G1396 | DF670 | W | PW | |
| SMR 449 | 450 | 11 | | FD262 | G1054 | 1 | | | | | FD291 | G1054 | | | | |
| TC 449 | 450 | 11 | | FD138 | G1396 | 1 | DF635 | FLW | FLS | FRS | FD291 | G1396 | DF885 | W | PW | |
| TE 449 | 450 | 11 | | FD138 | G1396 | 1 | DF635 | FLW | FLS | FRS | FD291 | G1396 | DF885 | W | PW | |
| 501 FE | 501 | 14 | | FD138 | G1396 | 1 | DF606 | W | FLW | FLS | FD291 | G1396 | DF607 | W | WLL | KG606 |
| 510 TC | 510 | 04 | 04 | FD138 | G1396 | 1 | DF635 | FLW | FLS | FRS | FD291 | G1396 | DF885 | W | PW | |
| 510 TC | 510 | 05 | | FD138 | G1396 | 1 | DF635 | FLW | FLS | FRS | FD291 | G1396 | DF670 | W | PW | |
| 510 TE | 510 | 90 | 94 | FD089 | G1054 | 1 | DF626 | FLW | | | FD075 | G1396 | DF638 | W | | |
| 510 TE | 510 | 95 | 99 | FD138 | G1054 | 1 | DF626 | FLW | | | FD165 | G1396 | DF638 | W | | |
| 510 TE | 510 | 00 | 04 | FD138 | G1054 | 1 | DF635 | FLW | FLS | FRS | FD165 | G1396 | DF885 | W | PW | |
| 510 TE | 510 | 05 | | FD138 | G1396 | 1 | DF635 | FLW | FLS | FRS | FD291 | G1396 | DF670 | W | PW | |
| TE 511 | 511 | 11 | | FD138 | G1396 | 1 | DF635 | FLW | FLS | FRS | FD291 | G1396 | DF885 | W | PW | |
| 570 TE | 570 | 00 | | FD138 | G1054 | 1 | DF635 | FLW | FLS | FRS | FD165 | G1396 | DF885 | W | PW | |
| 610 TC | 610 | 94 | 99 | FD138 | G1054 | 1 | DF626 | FLW | | | FD165 | G1396 | DF638 | W | | |
| 610 TC | 610 | 00 | | FD138 | G1054 | 1 | DF635 | FLW | FLS | FRS | FD165 | G1396 | DF885 | W | PW | |
| 610 TC, TE 4T | 610 | 91 | 94 | FD089 | G1054 | 1 | DF626 | FLW | | | FD075 | G1396 | DF638 | W | | |
| 610 TE | 610 | 92 | 94 | FD086 | G1054 | 1 | DF626 | FLW | | | FD095 | G1396 | DF638 | W | | |
| 610 TE | 610 | 94 | 99 | FD138 | G1054 | 1 | DF626 | FLW | | | FD165 | G1396 | DF638 | W | | |
| 610 TE | 610 | 00 | | FD138 | G1054 | 1 | DF635 | FLW | FLS | FRS | FD165 | G1396 | DF885 | W | PW | |
| 630 TE | 630 | 10 | | FD138 | G1396 | 1 | DF635 | FLW | FLS | FRS | FD165 | G1396 | DF885 | W | PW | |
| **JINCHENG** | | | | | | | | | | | | | | | | |
| JC 70 Y | 70 | 05 | | FD136 | G1054 | 1 | | | | | MF | | - | | | |
| JC 150 Y | 150 | 05 | | FD097 | G1054 | 1 | | | | | MF | | - | | | |
| **JOTAGAS** | | | | | | | | | | | | | | | | |
| JTG 300 JT | 300 | 12 | | FD446 | G1805 | 1 | | | | | FD224 | G1805 | | | | |
| **KAWASAKI** | | | | | | | | | | | | | | | | |
| KX 60 | 60 | 94 | | FD086 | G1054 | 1 | | | | | MF | | - | | | |
| KX 65 | 65 | 00 | 04 | FD254 | G1054 | 1 | DF195 | W | | | FD095 | G1396 | DF195 | W | | |
| KX 65 | 65 | 05 | | FD254 | G1396 | 1 | DF195 | W | | | FD095 | G1396 | DF195 | W | | |
| KX 80 | 80 | 91 | 92 | FD094 | G1054 | 1 | DF171 | W | | | FD076 | G1396 | | | | |
| KX 80 | 80 | 93 | 96 | FD091 | G1054 | 1 | DF171 | W | | | FD114 | G1396 | DF165 | W | | |
| KX 80 R7 KX 80-II | 80 | 97 | 99 | FD204 | G1054 | 1 | DF171 | W | | | FD076 | G1396 | DF165 | W | | |
| KX 85 | 85 | 00 | 03 | FD204 | G1054 | 1 | DF171 | W | | | FD076 | G1396 | DF165 | W | | |
| KX 85 | 85 | 03 | | FD204 | G1396 | 1 | DF171 | W | | | FD076 | G1396 | DF165 | W | | |
| KX 100 | 100 | 97 | | FD204 | G1054 | 1 | DF171 | W | | | FD076 | G1396 | DF165 | W | | |
| KL 125 ENDURO | 125 | 03 | | FD164 | G1396 | 1 | DF150 | FLW | FLS | FRS | FD286 | G1396 | DF179 | W | WLL | |
| KLX 125 | 125 | 10 | | FD086 | G1054 | 1 | | | | | FD095 | G1054 | | | | |
| KX 125 | 125 | 95 | 02 | FD164 | G1054 | 1 | DF150 | FLW | FLS | FRS | FD093 | G1396 | DF151 | W | | |
| KX 125 | 125 | 03 | 03 | FD164 | G1396 | 1 | DF182 | FLW | FLS | FRS | FD093 | G1396 | DF179 | W | WLL | |
| KX 125 | 125 | 04 | 05 | FD164 | G1396 | 1 | DF182 | FLW | FLS | FRS | FD093 | G1396 | DF179 | W | WLL | |
| KX 125 | 125 | 06 | | FD164 | G1396 | 1 | DF200 | FLW | FLS | FRS | FD093 | | DF179 | W | WLL | KG200 |
| KLX 140 L | 140 | 08 | | FD086 | G1396 | 1 | | | | | FD095 | G1396 | | | | |
| KDX 200 SR | 200 | 90 | | FD086 | G1054 | 1 | | | | | FD114 | G1396 | | | | |
| KDX 220 | 220 | 99 | | FD164 | G1054 | 1 | DF164 | | | | FD114 | G1396 | DF152 | W | | |
| D 250 TRACKER | 250 | 03 | | FD164 | G1054 | 1 | DF150 | FLW | | | FD093 | G1054 | DF152 | W | | |
| KDX 250 R | 250 | 92 | | FD086 | G1054 | 1 | DF150 | FLW | FLS | FRS | FD114 | G1396 | DF152 | W | | |
| KLX 250 | 250 | 09 | | FD086 | G1396 | 1 | | | | | FD093 | G1396 | | | | |
| KLX 250 D TRACKER | 250 | 00 | | FD164 | G1054 | 1 | | | | | FD093 | G1054 | DF152 | W | | |
| KLX 250 R | 250 | 92 | | FD086 | G1054 | 1 | DF150 | FLW | FLS | FRS | FD114 | G1396 | | | | |
| KLX 250 S | 250 | 05 | 07 | FD164 | G1396 | 1 | DF150 | FLW | FLS | FRS | FD093 | G1396 | DF152 | W | | |
| KLX 250 S | 250 | 08 | | FD164 | G1396 | 1 | DF201 | W | | | FD286 | G1396 | DF202 | W | | |
| KLX 250 SF | 250 | 09 | | FD086 | G1396 | 1 | | | | | FD093 | G1396 | | | | |
| KX 250 | 250 | 94 | 94 | FD164 | G1054 | 1 | DF150 | FLW | FLS | FRS | FD114 | G1396 | DF151 | W | | |
| KX 250 | 250 | 95 | 02 | FD164 | G1054 | 1 | DF150 | FLW | FLS | FRS | FD093 | G1396 | DF151 | W | | |
| KX 250 | 250 | 03 | 03 | FD164 | G1396 | 1 | DF182 | FLW | FLS | FRS | FD093 | G1396 | DF179 | W | WLL | |
| KX 250 | 250 | 04 | 05 | FD164 | G1396 | 1 | DF182 | FLW | FLS | FRS | FD286 | G1396 | DF179 | W | WLL | |
| KX 250 | 250 | 06 | | FD164 | G1396 | 1 | DF200 | FLW | FLS | FRS | FD286 | G1396 | DF179 | W | WLL | KG200 |
| KX 250 F | 250 | 04 | 05 | FD164 | G1396 | 1 | DF182 | FLW | FLS | FRS | FD286 | G1396 | DF179 | W | WLL | |
| KX 250 F | 250 | 06 | 10 | FD164 | G1396 | 1 | DF200 | FLW | FLS | FRS | FD286 | G1396 | DF179 | W | WLL | KG200 |
| KX 250 F | 250 | 11 | 14 | FD164 | G1396 | 1 | DF200 | FLW | FLS | FRS | FD286 | G1396 | DF179 | W | WLL | KG200 |
| KX 250 F | 250 | 15 | | FD164 | G1396 | 1 | DF208 | FLW | FLS | FRS | FD286 | G1396 | DF179 | W | WLL | |
| KXE 250 F | 250 | 03 | | FD164 | G1396 | 1 | DF150 | FLW | FLS | FRS | FD286 | G1396 | | | | |
| KLX 300 R | 300 | 96 | | FD164 | G1054 | 1 | DF150 | FLW | FLS | FRS | FD093 | G1396 | DF152 | W | | |
| KLX 400 R | 400 | 03 | | FD164 | G1396 | 1 | DF150 | FLW | FLS | FRS | FD093 | G1396 | DF151 | W | | |
| KLX 450 R | 450 | 07 | | FD164 | G1396 | 1 | DF200 | FLW | FLS | FRS | FD286 | G1396 | DF179 | W | WLL | KG200 |
| KX 450 F | 450 | 06 | 10 | FD164 | G1396 | 1 | DF200 | FLW | FLS | FRS | FD286 | G1396 | DF179 | W | WLL | KG200 |
| KX 450 F | 450 | 11 | 14 | FD164 | G1396 | 1 | DF200 | FLW | FLS | FRS | FD286 | G1396 | DF179 | W | WLL | KG200 |
| KX 450 F | 450 | 15 | | FD164 | G1396 | 1 | DF208 | FLW | FLS | FRS | FD286 | G1396 | DF179 | W | WLL | |
| KXE 450 F | 450 | 06 | | FD164 | G1396 | 1 | DF200 | FLW | FLS | FRS | FD286 | G1396 | DF179 | W | WLL | KG200 |
| KX 500 | 500 | 94 | 94 | FD164 | G1054 | 1 | DF150 | FLW | FLS | FRS | FD114 | G1396 | DF151 | W | | |
| KX 500 | 500 | 95 | | FD164 | G1054 | 1 | DF150 | FLW | FLS | FRS | FD093 | G1396 | DF151 | W | | |
| KLX 650 R | 650 | 93 | | FD164 | G1054 | 1 | DF150 | FLW | FLS | FRS | FD114 | G1396 | | | | |
| KLX 650 S | 650 | 93 | | FD164 | G1054 | 1 | DF170 | | | | FD114 | G1396 | | | | |

| BRAND & MODEL • MARCA Y MODELO<br>MARCA E MODELLO • MARQUE ET MODÉLE | C.C. | YEAR | | FRONT FD MF | FRONT COMPOUND RECOMMENDED | FRONT N° | FRONT DF | FRONT OE | FRONT UPGRADE 1 | FRONT UPGRADE 2 | REAR FD MF | REAR COMPOUND RECOMMENDED | REAR DF | REAR OE | REAR UPGRADE | KITS KG |
|---|---|---|---|---|---|---|---|---|---|---|---|---|---|---|---|---|
| **KREIDLER** | | | | | | | | | | | | | | | | |
| SUPERMOTO 250 DD | 250 | 08 | | FD086 | G1054 | 1 | | | | | FD095 | G1396 | | | | |
| **KTM** | | | | | | | | | | | | | | | | |
| 50 CHRONO | 50 | 95 | | FD170 | G1054 | 1 | | | | | MF630 | G2165 | - | | | |
| 50 GO | 50 | 95 | | FD084 | G1054 | 1 | | | | | MF630 | G2165 | - | | | |
| 50 LC PRO SENIOR | 50 | 04 | | FD230 | G1396 | 1 | | | | | FD230 | G1396 | | | | |
| 50 SX | 50 | 06 | | FD230 | G1396 | 1 | DF779 | W | | | FD230 | G1396 | DF780 | W | | |
| EXC 50 | 50 | 99 | | FD133 | G1054 | 1 | DF658 | W | | | FD065 | G1054 | | | | |
| 60 SX | 60 | 99 | | FD065 | G1054 | 1 | DF637 | W | | | MF | | - | | | |
| 65 SX | 65 | 00 | 01 | FD065 | G1054 | 1 | DF637 | W | | | FD048 | G1054 | DF639 | W | | |
| 65 SX | 65 | 02 | 03 | FD265 | G1054 | 1 | DF688 | W | | | FD048 | G1054 | DF639 | W | | |
| 65 SX | 65 | 04 | 08 | FD265 | G1396 | 1 | DF688 | W | | | FD230 | G1396 | DF689 | W | | |
| 65 SX | 65 | 09 | | FD265 | G1396 | 1 | DF688 | W | | | FD265 | G1396 | DF689 | W | | |
| 65 XC | 65 | 08 | | FD265 | G1396 | 1 | DF688 | W | | | FD230 | G1396 | DF689 | W | | |
| 80 MX | 80 | 92 | 01 | FD012 | G1054 | 1 | | | | | MF | | - | | | |
| 85 SX | 85 | 03 | 06 | FD265 | G1396 | 1 | DF685 | W | | | FD265 | G1396 | DF686 | W | | |
| 85 SX | 85 | 07 | 10 | FD265 | G1396 | 1 | DF777 | W | | | FD265 | G1396 | DF778 | W | | |
| 85 SX | 85 | 11 | 11 | FD265 | G1396 | 1 | DF777 | W | | | FD441 | G1396 | DF797 | W | | |
| 85 SX 17/14 | 85 | 12 | | FD458 | G1396 | 1 | DF777 | W | | | FD441 | G1396 | DF797 | W | | |
| 85 SX 19/16 | 85 | 13 | | FD458 | G1396 | 1 | DF794 | W | | | FD441 | G1396 | DF797 | W | | |
| 105 SX (USA) | 105 | 04 | 06 | FD265 | G1396 | 1 | DF685 | W | | | FD265 | G1396 | DF686 | W | | |
| 105 XC | 105 | 07 | | FD265 | G1396 | 1 | DF777 | W | | | FD265 | G1396 | DF778 | W | | |
| 125 ENDURO | 125 | 92 | 92 | FD128 | G1054 | 1 | | | | | FD075 | G1396 | DF607 | W | WLL | |
| 125 ENDURO | 125 | 93 | | FD138 | G1054 | 1 | DF606 | W | FLW | FLS | FD075 | G1396 | DF607 | W | WLL | |
| 125 EXC | 125 | 04 | | FD138 | G1396 | 1 | DF606 | W | FLW | FLS | FD291 | G1396 | DF607 | W | WLL | |
| 125 EXC/EGS/SX | 125 | 95 | 03 | FD138 | G1054 | 1 | DF606 | W | FLW | FLS | FD165 | G1396 | DF607 | W | WLL | |
| 125 GS | 125 | 91 | 92 | FD128 | G1054 | 1 | | | | | FD075 | G1396 | DF607 | W | WLL | |
| 125 GS | 125 | 93 | 93 | FD138 | G1054 | 1 | DF606 | W | FLW | FLS | FD075 | G1396 | DF607 | W | WLL | |
| 125 GS | 125 | 94 | 94 | FD138 | G1054 | 1 | DF606 | W | FLW | FLS | FD165 | G1396 | DF607 | W | WLL | |
| 125 MX | 125 | 92 | 95 | FD138 | G1054 | 1 | DF606 | W | FLW | FLS | FD075 | G1396 | DF607 | W | WLL | |
| 125 SX | 125 | 93 | 93 | FD138 | G1054 | 1 | DF606 | W | FLW | FLS | FD075 | G1396 | DF607 | W | WLL | |
| 125 SX | 125 | 94 | 03 | FD138 | G1054 | 1 | DF606 | W | FLW | FLS | FD165 | G1396 | DF607 | W | WLL | |
| 125 SX | 125 | 04 | | FD138 | G1396 | 1 | DF606 | W | FLW | FLS | FD291 | G1396 | DF607 | W | WLL | |
| 144 SX | 144 | 08 | | FD138 | G1396 | 1 | DF606 | W | FLW | FLS | FD291 | G1396 | DF607 | W | WLL | KG606 |
| 150 SX 17/14 | 150 | 15 | | FD458 | G1396 | 1 | DF777 | W | | | FD441 | G1396 | DF797 | W | | |
| 150 SX 19/16 | 150 | 15 | | FD458 | G1396 | 1 | DF794 | W | | | FD441 | G1396 | DF797 | W | | |
| 150 XC | 150 | 10 | | FD138 | G1396 | 1 | DF606 | W | FLW | FLS | FD291 | G1396 | DF607 | W | WLL | KG606 |
| 200 EGS | 200 | 99 | 02 | FD138 | G1054 | 1 | DF606 | W | FLW | FLS | FD165 | G1396 | DF607 | W | WLL | |
| 200 EXC | 200 | 98 | 03 | FD138 | G1054 | 1 | DF606 | W | FLW | FLS | FD165 | G1396 | DF607 | W | WLL | |
| 200 EXC | 200 | 04 | | FD138 | G1396 | 1 | DF606 | W | FLW | FLS | FD291 | G1396 | DF607 | W | WLL | |
| 200 SX | 200 | 03 | 03 | FD138 | G1396 | 1 | DF606 | W | FLW | FLS | FD165 | G1396 | DF607 | W | WLL | |
| 200 SX | 200 | 04 | | FD138 | G1396 | 1 | DF606 | W | FLW | FLS | FD291 | G1396 | DF607 | W | WLL | |
| 250 F | 250 | 06 | | FD138 | G1396 | 1 | DF606 | W | FLW | FLS | FD291 | G1396 | DF607 | W | WLL | |
| 250 EGS | 250 | 99 | | FD138 | G1054 | 1 | DF606 | W | FLW | FLS | FD165 | G1396 | DF607 | W | WLL | |
| 250 ENDURO | 250 | 92 | 92 | FD128 | G1054 | 1 | DF606 | W | FLW | FLS | FD075 | G1396 | DF607 | W | WLL | |
| 250 ENDURO | 250 | 93 | | FD138 | G1054 | 1 | DF606 | W | FLW | FLS | FD075 | G1396 | DF607 | W | WLL | |
| 250 EXC / 4T | 250 | 03 | 03 | FD138 | G1396 | 1 | DF606 | W | FLW | FLS | FD165 | G1396 | DF607 | W | WLL | |
| 250 EXC / 4T | 250 | 04 | | FD138 | G1396 | 1 | DF606 | W | FLW | FLS | FD291 | G1396 | DF607 | W | WLL | |
| 250 EXC F | 250 | 15 | | FD138 | G1396 | 1 | DF606 | W | FLW | FLS | FD291 | G1396 | DF607 | W | WLL | KG606 |
| 250 EXC/EGS/SX | 250 | 94 | 02 | FD138 | G1054 | 1 | DF606 | W | FLW | FLS | FD165 | G1396 | DF607 | W | WLL | |
| 250 FREERIDE | 250 | 13 | | FD458 | G1396 | 1 | DF796 | W | | | FD441 | G1396 | DF797 | W | | |
| 250 GS | 250 | 91 | 92 | FD128 | G1054 | 1 | | | | | FD075 | G1396 | DF607 | W | WLL | |
| 250 GS | 250 | 93 | 93 | FD138 | G1054 | 1 | DF606 | W | FLW | FLS | FD075 | G1396 | DF607 | W | WLL | |
| 250 GS | 250 | 94 | | FD138 | G1054 | 1 | DF606 | W | FLW | FLS | FD165 | G1396 | DF607 | W | WLL | |
| 250 MX | 250 | 92 | 92 | FD138 | G1054 | 1 | | | | | FD075 | G1396 | DF607 | W | WLL | |
| 250 MX | 250 | 03 | | FD138 | G1396 | 1 | DF606 | W | FLW | FLS | FD165 | G1396 | DF607 | W | WLL | |
| 250 SX | 250 | 94 | 02 | FD138 | G1054 | 1 | DF606 | W | FLW | FLS | FD165 | G1396 | DF607 | W | WLL | |
| 250 SX | 250 | 03 | | FD138 | G1396 | 1 | DF606 | W | FLW | FLS | FD291 | G1396 | DF607 | W | WLL | |
| 250 SX F | 250 | 15 | | FD138 | G1396 | 1 | DF606 | W | FLW | FLS | FD291 | G1396 | DF607 | W | WLL | KG606 |
| 250 SX, EGS, EXC | 250 | 93 | 93 | FD138 | G1054 | 1 | DF606 | W | FLW | FLS | FD075 | G1396 | DF607 | W | WLL | |
| 250 XC / F / W | 250 | 06 | | FD138 | G1396 | 1 | DF606 | W | FLW | FLS | FD291 | G1396 | DF607 | W | WLL | |
| 300 ENDURO | 300 | 92 | 92 | FD128 | G1054 | 1 | DF606 | W | FLW | FLS | FD075 | G1396 | DF607 | W | WLL | |
| 300 ENDURO | 300 | 93 | | FD138 | G1054 | 1 | DF606 | W | FLW | FLS | FD075 | G1396 | DF607 | W | WLL | |
| 300 EXC | 300 | 03 | 03 | FD138 | G1396 | 1 | DF606 | W | FLW | FLS | FD165 | G1396 | DF607 | W | WLL | |
| 300 EXC | 300 | 04 | | FD138 | G1396 | 1 | DF606 | W | FLW | FLS | FD291 | G1396 | DF607 | W | WLL | |
| 300 EXC - E | 300 | 08 | | FD138 | G1396 | 1 | DF606 | W | FLW | FLS | FD291 | G1396 | DF607 | W | WLL | KG606 |
| 300 GS | 300 | 91 | | FD128 | G1054 | 1 | | | | | FD075 | G1396 | DF607 | W | WLL | |
| 300 MXC | 300 | 04 | | FD138 | G1396 | 1 | DF606 | W | FLW | FLS | FD291 | G1396 | DF607 | W | WLL | |
| 300 SX, EGS, EXC | 300 | 93 | 03 | FD138 | G1054 | 1 | DF606 | W | FLW | FLS | FD075 | G1396 | DF607 | W | WLL | |
| 300 XC / W | 300 | 06 | | FD138 | G1396 | 1 | DF606 | W | FLW | FLS | FD291 | G1396 | DF607 | W | WLL | |
| 350 ECX F | 350 | 12 | | FD138 | G1396 | 1 | DF606 | W | FLW | FLS | FD291 | G1396 | DF607 | W | WLL | KG606 |
| 350 FREERIDE | 350 | 12 | | FD458 | G1396 | 1 | DF796 | W | | | FD441 | G1396 | DF797 | W | | |
| 350 LC4 EXC | 350 | 94 | | FD138 | G1054 | 1 | DF606 | W | FLW | FLS | FD165 | G1396 | DF607 | W | WLL | |



**OE:** Original equipment (original replacement disc) - **OE:** Equipo original (disco de remplazo del original) For other models years previous to 1990 visit **www.galferonline.es** - Para otros modelos anteriores al año 1990 visitar **www.galferonline.es**
For consult TÜV (ABE) type approvals visit **www.galfermoto.com --> DOWNALOAD --> TÜV CERTIFICATIONS** - Para consultar las homologaciones TÜV (ABE) visitar **www.galfermoto.com --> DESCARGAS --> CERTIFICACIONES TÜV**

| BRAND & MODEL • MARCA Y MODELO<br>MARCA E MODELLO • MARQUE ET MODÉLE | C.C. | YEAR | YEAR 00 | FRONT FD MF | FRONT COMPOUND RECOMMENDED | FRONT N° | FRONT DF | FRONT OE | FRONT UPGRADE 1 | FRONT UPGRADE 2 | REAR FD MF | REAR COMPOUND RECOMMENDED | REAR DF | REAR OE | REAR UPGRADE | KITS KG |
|---|---|---|---|---|---|---|---|---|---|---|---|---|---|---|---|---|
| 350 MX | 350 | 91 | 91 | FD075 | G1054 | 1 | | | | | FD075 | G1396 | DF607 | W | WLL | |
| 350 MX | 350 | 92 | | FD138 | G1054 | 1 | DF606 | W | FLW | FLS | FD075 | G1396 | DF607 | W | WLL | |
| 350 SX F | 350 | 11 | | FD138 | G1396 | 1 | DF606 | W | FLW | FLS | FD291 | G1396 | DF607 | W | WLL | KG606 |
| 350 SX FACTORY | 350 | 10 | | FD138 | G1396 | 1 | DF606 | W | FLW | FLS | FD291 | G1396 | DF607 | W | WLL | KG606 |
| 350 XC F | 350 | 11 | | FD138 | G1396 | 1 | DF606 | W | FLW | FLS | FD291 | G1396 | DF607 | W | WLL | KG606 |
| 400 EXC | 400 | 04 | | FD138 | G1396 | 1 | DF606 | W | FLW | FLS | FD291 | G1396 | DF607 | W | WLL | |
| 400 LC4 EGS | 400 | 96 | | FD138 | G1054 | 1 | DF672 | FLW | | | FD165 | G1396 | | | | |
| 400 LC4 EGS | 400 | 94 | 95 | FD138 | G1054 | 1 | DF606 | W | FLW | FLS | FD165 | G1396 | DF607 | W | WLL | |
| 440 SX | 440 | 94 | | FD138 | G1054 | 1 | DF606 | W | FLW | FLS | FD165 | G1396 | DF607 | W | WLL | |
| 450 EXC | 450 | 03 | 03 | FD138 | G1396 | 1 | DF606 | W | FLW | FLS | FD165 | G1396 | DF607 | W | WLL | |
| 450 EXC | 450 | 04 | | FD138 | G1396 | 1 | DF606 | W | FLW | FLS | FD291 | G1396 | DF607 | W | WLL | |
| 450 EXC - R | 450 | 08 | | FD138 | G1396 | 1 | DF606 | W | FLW | FLS | FD291 | G1396 | DF607 | W | WLL | KG606 |
| 450 MXC | 450 | 04 | | FD138 | G1396 | 1 | DF606 | W | FLW | FLS | FD291 | G1396 | DF607 | W | WLL | |
| 450 RALLY | 450 | 11 | | FD138 | G1396 | 1 | DF672 | FLW | | | FD291 | G1396 | | | | |
| 450 SMR | 450 | 07 | | FD304 | G1054 | 1 | DF672 | FLW | | | FD291 | G1054 | DF607 | W | WLL | |
| 450 SX | 450 | 03 | | FD138 | G1396 | 1 | DF606 | W | FLW | FLS | FD291 | G1396 | DF607 | W | WLL | |
| 450 SXF | 450 | 07 | | FD138 | G1396 | 1 | DF606 | W | FLW | FLS | FD291 | G1396 | DF607 | W | WLL | |
| 450 XC | 450 | 06 | | FD138 | G1396 | 1 | DF606 | W | FLW | FLS | FD291 | G1396 | DF607 | W | WLL | |
| 450 XC SIX DAYS | 450 | 10 | | FD138 | G1396 | 1 | DF606 | W | FLW | FLS | FD291 | G1396 | DF607 | W | WLL | KG606 |
| 500 EXC | 500 | 14 | | FD138 | G1396 | 1 | DF606 | W | FLW | FLS | FD291 | G1396 | DF607 | W | WLL | KG606 |
| 500 MX | 500 | 92 | | FD138 | G1054 | 1 | DF606 | W | FLW | FLS | FD075 | G1396 | DF607 | W | WLL | |
| 500 SX | 500 | 93 | | FD138 | G1054 | 1 | DF606 | W | FLW | FLS | FD075 | G1396 | DF607 | W | WLL | |
| 505 SX | 505 | 07 | | FD138 | G1396 | 1 | DF606 | W | FLW | FLS | FD291 | G1396 | DF607 | W | WLL | |
| 525 EXC | 525 | 03 | 03 | FD138 | G1396 | 1 | DF606 | W | FLW | FLS | FD165 | G1396 | DF607 | W | WLL | |
| 525 EXC | 525 | 04 | | FD138 | G1396 | 1 | DF606 | W | FLW | FLS | FD291 | G1396 | DF607 | W | WLL | |
| 525 MXC | 525 | 04 | | FD138 | G1396 | 1 | DF606 | W | FLW | FLS | FD291 | G1396 | DF607 | W | WLL | |
| 525 SX | 525 | 03 | 03 | FD138 | G1396 | 1 | DF606 | W | FLW | FLS | FD165 | G1396 | DF607 | W | WLL | |
| 525 SX | 525 | 04 | | FD138 | G1396 | 1 | DF606 | W | FLW | FLS | FD291 | G1396 | DF607 | W | WLL | |
| 530 EXC - R | 530 | 08 | | FD138 | G1396 | 1 | DF606 | W | FLW | FLS | FD291 | G1396 | DF607 | W | WLL | KG606 |
| 530 XC / W | 530 | 08 | | FD138 | G1396 | 1 | DF606 | W | FLW | FLS | FD291 | G1396 | DF607 | W | WLL | KG606 |
| 530 XC SIX DAYS | 530 | 10 | | FD138 | G1396 | 1 | DF606 | W | FLW | FLS | FD291 | G1396 | DF607 | W | WLL | KG606 |
| 540 SXC | 540 | 99 | | FD138 | G1054 | 1 | DF606 | W | FLW | FLS | FD165 | G1396 | DF607 | W | WLL | |
| 550 MG,XC | 550 | 94 | | FD138 | G1054 | 1 | DF606 | W | FLW | FLS | FD165 | G1396 | DF607 | W | WLL | |
| 600 4T GARA | 600 | 91 | 92 | FD128 | G1054 | 1 | DF606 | W | FLW | FLS | FD075 | G1396 | DF607 | W | WLL | |
| 600 4T GS | 600 | 93 | 93 | FD138 | G1054 | 1 | DF606 | W | FLW | FLS | FD075 | G1396 | DF607 | W | WLL | |
| 600 4T GS | 600 | 94 | | FD138 | G1054 | 1 | DF606 | W | FLW | FLS | FD165 | G1396 | DF607 | W | WLL | |
| 600 MX LC4 | 600 | 90 | | FD075 | G1054 | 1 | DF606 | W | FLW | FLS | FD075 | G1396 | DF607 | W | WLL | |
| 620 LC4 EXC, EGS, SX | 620 | 94 | | FD138 | G1054 | 1 | DF672 | FLW | | | FD165 | G1396 | DF607 | W | WLL | |
| 625 EXC | 625 | 03 | | FD138 | G1396 | 1 | DF606 | W | FLW | FLS | FD165 | G1396 | DF607 | W | WLL | |
| 640 LC4 ENDURO | 640 | 99 | | FD138 | G1054 | 1 | DF672 | FLW | | | FD165 | G1396 | DF607 | W | WLL | |
| 690 ENDURO | 690 | 08 | | FD172 | G1054 | 1 | DF770 | W | FLW | | FD165 | G1054 | DF771 | W | | |
| 690 ENDURO R | 690 | 09 | | FD172 | G1054 | 1 | DF770 | W | FLW | | FD165 | G1054 | DF771 | W | | |
| **METRAKIT** | | | | | | | | | | | | | | | | |
| SRM 110 4T | 110 | 07 | | FD265 | G1396 | 1 | DF688 | W | | | FD230 | G1396 | DF689 | W | | |
| **MONKEY BIKE** | | | | | | | | | | | | | | | | |
| MB 200 SM | 200 | 06 | | FD162 | G1054 | 1 | | | | | FD065 | G1054 | | | | |
| MB 200 TR | 200 | 06 | | FD162 | G1054 | 1 | | | | | FD065 | G1054 | | | | |
| **MONTESA** | | | | | | | | | | | | | | | | |
| COTA 4 RT | 250 | 05 | 11 | FD223 | G1805 | 1 | DF740 | W | | | FD224 | G1805 | DF741 | W | | |
| COTA 4 RT | 250 | 12 | | FD446 | G1805 | 1 | DF808 | W | | | FD224 | G1805 | DF809 | W | | |
| COTA 260 4RT | 260 | 15 | | FD223 | G1805 | 1 | | | | | FD224 | G1805 | | | | |
| COTA 260 4RT RACE REPLICA | 260 | 15 | | FD460 | G1805 | 1 | | | | | FD224 | G1805 | | | | |
| COTA 310 | 310 | 90 | | FD122 | G1805 | 1 | | | | | FD123 | G1805 | | | | |
| COTA 311 EVASION | 311 | 91 | | FD122 | G1805 | 1 | | | | | FD123 | G1805 | DF641 | | | |
| COTA 314 R | 314 | 94 | | FD122 | G1805 | 1 | | | | | FD123 | G1805 | | | | |
| COTA 315 R | 315 | 99 | | FD122 | G1805 | 1 | | | | | FD123 | G1805 | | | | |
| COTA 315 R | 315 | 01 | | FD238 | G1805 | 1 | | | | | FD239 | G1805 | | | | |
| **MOTORHISPANIA** | | | | | | | | | | | | | | | | |
| DUNA DUAL SPORT | 125 | 09 | | FD162 | G1054 | 1 | | | | | FD065 | G1054 | | | | |
| MH 10 PRO 125 LC | 125 | 12 | | FD162 | G1054 | 1 | DF888 | W | | | FD075 | G1054 | DF889 | W | | |
| MH 10 PRO 125 LC SM | 125 | 12 | | FD341 | G1054 | 1 | DF860 | W | | | FD075 | G1054 | DF861 | W | | |
| **OSSA** | | | | | | | | | | | | | | | | |
| TR 125i | 125 | 15 | | FD223 | G1805 | 1 | | | | | FD224 | G1805 | | | | |
| TR 250i | 250 | 15 | | FD223 | G1805 | 1 | | | | | FD224 | G1805 | | | | |
| EXPLORER 280i | 280 | 12 | | FD223 | G1805 | 1 | | | | | FD224 | G1805 | | | | |
| TR 280i | 280 | 10 | | FD223 | G1805 | 1 | | | | | FD224 | G1805 | | | | |
| ENDURO 300i | 300 | 12 | | FD138 | G1396 | 1 | DF635 | FLW | FLS | FRS | FD291 | G1396 | | | | |
| TR 300i | 300 | 15 | | FD223 | G1805 | 1 | | | | | FD224 | G1805 | | | | |
| TR 300i FACTORY R | 300 | 15 | | FD460 | G1805 | 1 | | | | | FD224 | G1805 | | | | |
| **POLINI** | | | | | | | | | | | | | | | | |
| XP 65 R MINICROSS | 65 | 08 | | FD224 | G1054 | 1 | | | | | FD224 | G1054 | | | | |
| XP 4T CROSS | 100 | 08 | | FD224 | G1054 | 1 | | | | | FD224 | G1054 | | | | |
| XP 4T RACING CROSS | 100 | 08 | | FD224 | G1054 | 1 | | | | | FD224 | G1054 | | | | |

OE discs → W FLW CW Special discs → WLL WS RW RWS FLS FRS CRW

| BRAND & MODEL • MARCA Y MODELO<br>MARCA E MODELLO • MARQUE ET MODÉLE | C.C. | YEAR | | FRONT FD MF | FRONT COMPOUND RECOMMENDED | FRONT N° | FRONT DF | FRONT OE | FRONT UPGRADE 1 | FRONT UPGRADE 2 | REAR FD MF | REAR COMPOUND RECOMMENDED | REAR DF | REAR OE | REAR UPGRADE | KITS KG |
|---|---|---|---|---|---|---|---|---|---|---|---|---|---|---|---|---|
| XP 4 OFF ROAD | 125 | 08 | | FD224 | G1054 | 1 | | | | | FD224 | G1805 | | | | |
| **RIEJU** | | | | | | | | | | | | | | | | |
| MARATHON PRO 125 | 125 | 09 | | FD220 | G1054 | 1 | | | | | FD252 | G1054 | | | | |
| MARATHON 250 | 250 | 09 | | FD138 | G1396 | 1 | DF301 | FLW | FLS | FRS | FD291 | G1396 | DF479 | W | | |
| MRX 250 | 250 | 06 | | FD164 | G1396 | 1 | DF301 | FLW | FLS | FRS | FD093 | G1396 | DF479 | W | | |
| TANGO OFF ROAD 250 | 250 | 09 | | FD220 | G1054 | 1 | DF677 | W | FLW | FLS | FD065 | G1054 | DF675 | W | | |
| TANGO ROAD 250 | 250 | 09 | | FD220 | G1054 | 1 | DF677 | W | FLW | FLS | FD065 | G1054 | DF675 | W | | |
| MARATHON 450 | 450 | 09 | | FD138 | G1396 | 1 | DF301 | FLW | FLS | FRS | FD291 | G1396 | DF479 | W | | |
| MRX 450 | 450 | 05 | | FD164 | G1396 | 1 | DF301 | FLW | FLS | FRS | FD093 | G1396 | DF479 | W | | |
| **SCORPA** | | | | | | | | | | | | | | | | |
| SY 125 F | 125 | 05 | | FD223 | G1805 | 1 | | | | | FD224 | G1805 | | | | |
| T-RIDE 125 F | 125 | 10 | | FD409 | G1396 | 1 | | | | | FD270 | G1054 | | | | |
| TWENTY 125 | 125 | 15 | | FD223 | G1805 | 1 | | | | | FD224 | G1805 | | | | |
| TY S 125 F | 125 | 05 | | FD065 | G1805 | 1 | | | | | FD224 | G1805 | | | | |
| SY 500 | 163 | 08 | | FD223 | G1805 | 1 | | | | | FD224 | G1805 | | | | |
| SY 175 F | 175 | 05 | | FD223 | G1805 | 1 | | | | | FD224 | G1805 | | | | |
| TY S 175 F | 175 | 06 | | FD065 | G1805 | 1 | | | | | FD224 | G1805 | | | | |
| 2S5 WORKS | 250 | 95 | | FD065 | G1805 | 1 | | | | | FD065 | G1805 | | | | |
| ENDURO 2.5i | 250 | 06 | | FD164 | G1396 | 1 | | | | | FD093 | G1396 | | | | |
| SY 250 | 250 | 00 | 04 | FD238 | G1805 | 1 | | | | | FD239 | G1805 | | | | |
| SY 250 | 250 | 05 | 05 | FD223 | G1805 | 1 | | | | | FD224 | G1805 | | | | |
| SY 250 F | 250 | 06 | | FD223 | G1805 | 1 | | | | | FD224 | G1805 | | | | |
| SY 250 FR | 250 | 10 | | FD223 | G1805 | 1 | | | | | FD224 | G1805 | | | | |
| TWENTY 250 | 250 | 15 | | FD223 | G1805 | 1 | | | | | FD224 | G1805 | | | | |
| EASY RACE 280 | 280 | 99 | | FD065 | G1805 | 1 | | | | | FD065 | G1805 | | | | |
| TWENTY 300 | 300 | 15 | | FD223 | G1805 | 1 | | | | | FD224 | G1805 | | | | |
| ENDURO 4.5i | 450 | 06 | | FD164 | G1396 | 1 | | | | | FD093 | G1396 | | | | |
| ENDURO 5.1i | 510 | 06 | | FD164 | G1396 | 1 | | | | | FD093 | G1396 | | | | |
| **SHERCO** | | | | | | | | | | | | | | | | |
| 0.8 | 80 | 03 | 12 | FD223 | G1805 | 1 | DF740 | W | | | FD224 | G1805 | DF741 | W | | |
| 80 ST | 80 | 15 | | FD223 | G1805 | 1 | DF740 | W | | | FD224 | G1805 | DF741 | W | | |
| ST 8.0 | 80 | 13 | 14 | FD446 | G1805 | 1 | | | | | FD224 | G1805 | | | | |
| 1.25 | 125 | 99 | 01 | FD133 | G1805 | 1 | | | | | FD065 | G1805 | | | | |
| 1.25 | 125 | 02 | 05 | FD223 | G1805 | 1 | DF740 | W | | | FD224 | G1805 | DF741 | W | | |
| 125 ST | 125 | 15 | | FD223 | G1805 | 1 | DF740 | W | | | FD224 | G1805 | DF741 | W | | |
| SE 1.25 F | 125 | 10 | | FD162 | G1054 | 1 | | | | | FD270 | G1054 | | | | |
| ST 1.25 | 125 | 06 | 12 | FD223 | G1805 | 1 | DF740 | W | | | FD224 | G1805 | DF741 | W | | |
| ST 1.25 | 125 | 13 | 14 | FD446 | G1805 | 1 | | | | | FD224 | G1805 | | | | |
| 2.0 | 200 | 99 | 05 | FD065 | G1805 | 1 | | | | | FD065 | G1805 | | | | |
| ST 2.0 | 200 | 06 | | FD223 | G1805 | 1 | DF740 | W | | | FD224 | G1805 | DF741 | W | | |
| 2.5 | 250 | 99 | 01 | FD065 | G1805 | 1 | | | | | FD065 | G1805 | | | | |
| 2.5 02 Series | 250 | 02 | 05 | FD223 | G1805 | 1 | DF740 | W | | | FD224 | G1805 | DF741 | W | | |
| 2.5 if | 250 | 09 | | FD138 | G1396 | 1 | DF772 | FLW | | | FD093 | G1396 | DF670 | W | PW | |
| 250 SE | 250 | 15 | | FD138 | G1396 | 1 | DF772 | FLW | | | FD286 | G1396 | DF885 | W | PW | |
| 250 SE-R | 250 | 15 | | FD138 | G1396 | 1 | DF635 | FLW | FLS | FRS | FD286 | G1396 | DF885 | W | PW | |
| 250 SEF | 250 | 15 | | FD138 | G1396 | 1 | DF772 | FLW | | | FD286 | G1396 | DF885 | W | PW | |
| 250 SEF-R | 250 | 15 | | FD138 | G1396 | 1 | DF635 | FLW | FLS | FRS | FD286 | G1396 | DF885 | W | PW | |
| 250 ST | 250 | 15 | | FD223 | G1805 | 1 | DF740 | W | | | FD224 | G1805 | DF741 | W | | |
| SE 2.5i | 250 | 12 | | FD138 | G1396 | 1 | DF772 | FLW | | | FD291 | G1396 | DF670 | W | PW | |
| ST 2.5 | 250 | 06 | 12 | FD223 | G1805 | 1 | DF740 | W | | | FD224 | G1805 | DF741 | W | | |
| ST 2.5 | 250 | 13 | 14 | FD446 | G1805 | 1 | DF808 | W | | | FD224 | G1805 | DF809 | W | | |
| SX 2.5 F | 250 | 10 | | FD138 | G1396 | 1 | DF772 | FLW | | | FD286 | G1396 | DF670 | W | PW | |
| 2.9 | 290 | 99 | 00 | FD065 | G1805 | 1 | | | | | FD065 | G1805 | | | | |
| 2.9 | 290 | 01 | 05 | FD223 | G1805 | 1 | DF740 | W | | | FD224 | G1805 | DF741 | W | | |
| 290 ST | 290 | 15 | | FD223 | G1805 | 1 | DF740 | W | | | FD224 | G1805 | DF741 | W | | |
| ST 2.9 | 290 | 06 | 11 | FD223 | G1805 | 1 | DF740 | W | | | FD224 | G1805 | DF741 | W | | |
| ST 2.9 | 290 | 12 | 14 | FD446 | G1805 | 1 | DF808 | W | | | FD224 | G1805 | DF809 | W | | |
| 300 SE | 300 | 15 | | FD138 | G1396 | 1 | DF772 | FLW | | | FD286 | G1396 | DF885 | W | PW | |
| 300 SE-R | 300 | 15 | | FD138 | G1396 | 1 | DF635 | FLW | FLS | FRS | FD286 | G1396 | DF885 | W | PW | |
| 300 SEF | 300 | 15 | | FD138 | G1396 | 1 | DF772 | FLW | | | FD286 | G1396 | DF885 | W | PW | |
| 300 SEF-R | 300 | 15 | | FD138 | G1396 | 1 | DF772 | FLW | | | FD286 | G1396 | DF885 | W | PW | |
| SE 3.0 | 300 | 10 | 11 | FD138 | G1396 | 1 | DF772 | FLW | | | FD286 | G1396 | DF670 | W | PW | |
| SE 3.0i | 300 | 12 | | FD138 | G1396 | 1 | DF772 | FLW | | | FD291 | G1396 | DF670 | W | PW | |
| ST 3.0 | 300 | 13 | | FD446 | G1805 | 1 | | | | | FD224 | G1805 | | | | |
| 305 ST | 305 | 15 | | FD223 | G1805 | 1 | DF740 | W | | | FD224 | G1805 | DF741 | W | | |
| 3.2 4T | 320 | 05 | | FD223 | G1805 | 1 | DF740 | W | | | FD224 | G1805 | DF741 | W | | |
| 4.5 4T | 450 | 04 | 08 | FD138 | G1396 | 1 | DF772 | FLW | | | FD286 | G1396 | DF670 | W | PW | |
| 4.5 4T SM | 450 | 05 | 08 | FD068 | G1054 | 1 | | | | | FD286 | G1054 | DF670 | W | PW | |
| 4.5 4T SM if | 450 | 09 | | FD262 | G1054 | 1 | | | | | FD093 | G1054 | DF670 | W | PW | |
| 4.5 if | 450 | 09 | | FD138 | G1396 | 1 | DF772 | FLW | | | FD093 | G1396 | DF670 | W | PW | |
| 450 SEF | 450 | 15 | | FD138 | G1396 | 1 | DF772 | FLW | | | FD286 | G1396 | DF885 | W | PW | |
| 450 SEF-R | 450 | 15 | | FD138 | G1396 | 1 | DF635 | FLW | FLS | FRS | FD286 | G1396 | DF885 | W | PW | |
| SE 4.5i | 450 | 12 | | FD138 | G1396 | 1 | DF772 | FLW | | | FD291 | G1396 | DF670 | W | PW | |



**OE:** Original equipment (original replacement disc) • **OE:** Equipo original (disco de remplazo del original) For other models years previous to 1990 visit **www.galferonline.es** • Para otros modelos anteriores al año 1990 visitar **www.galferonline.es**
For consult TÜV (ABE) type approvals visit **www.galfermoto.com --> DOWNALOAD --> TÜV CERTIFICATIONS** • Para consultar las homologaciones TÜV (ABE) visitar **www.galfermoto.com --> DESCARGAS --> CERTIFICACIONES TÜV**

| BRAND & MODEL • MARCA Y MODELO / MARCA E MODELLO • MARQUE ET MODÉLE | C.C. | YEAR | | FRONT FD MF | FRONT COMPOUND RECOMMENDED | FRONT N° | FRONT DF | FRONT OE | FRONT UPGRADE 1 | FRONT UPGRADE 2 | REAR FD MF | REAR COMPOUND RECOMMENDED | REAR DF | REAR OE | REAR UPGRADE | KITS KG |
|---|---|---|---|---|---|---|---|---|---|---|---|---|---|---|---|---|
| 5.1 4T | 510 | 06 | 08 | FD138 | G1396 | 1 | DF772 | FLW | | | FD286 | G1396 | DF670 | W | PW | |
| 5.1 if | 510 | 09 | | FD138 | G1396 | 1 | DF772 | FLW | | | FD093 | G1396 | DF670 | W | PW | |
| SE 5.1i | 510 | 12 | | FD138 | G1396 | 1 | DF772 | FLW | | | FD291 | G1396 | DF670 | W | PW | |
| **SUMCO** | | | | | | | | | | | | | | | | |
| JUNIOR CROSS 90 | 90 | 06 | | FD065 | G1054 | 1 | | | | | MF | | - | | | |
| **SUZUKI** | | | | | | | | | | | | | | | | |
| RM 65 | 65 | 03 | | FD254 | G1396 | 1 | DF195 | W | | | FD095 | G1396 | DF195 | W | | |
| RM 80 | 80 | 90 | 95 | FD094 | G1054 | 1 | | | | | FD094 | G1396 | DF165 | W | | |
| RM 80 | 80 | 96 | 02 | FD177 | G1054 | 1 | DF353 | W | | | FD094 | G1396 | DF165 | W | | |
| RM 85 / L | 85 | 03 | 04 | FD177 | G1054 | 1 | DF353 | W | | | FD094 | G1396 | DF165 | W | | |
| RM 85 / L | 85 | 05 | | FD204 | G1396 | 1 | DF489 | W | | | FD362 | G1396 | DF329 | W | | |
| DR 125 S | 125 | 98 | | FD095 | G1054 | 1 | | | | | MF151 | G2165 | - | | | |
| RM 125 | 125 | 96 | 98 | FD164 | G1054 | 1 | DF301 | FLW | FLS | FRS | FD093 | G1396 | DF302 | W | | KG301 |
| RM 125 | 125 | 99 | 03 | FD164 | G1054 | 1 | DF301 | FLW | FLS | FRS | FD093 | G1396 | DF338 | W | | KG301 |
| RM 125 | 125 | 04 | 05 | FD164 | G1396 | 1 | DF301 | FLW | FLS | FRS | FD286 | G1396 | DF338 | W | | KG301 |
| RM 125 | 125 | 06 | | FD164 | G1396 | 1 | DF301 | FLW | FLS | FRS | FD286 | G1396 | DF354 | W | | KG301 |
| DR 250 S | 250 | 90 | 00 | FD086 | G1054 | 1 | DF306 | W | | | FD114 | G1396 | | | | |
| DR 250 SB | 250 | 03 | | FD164 | G1054 | 1 | DF150 | FLW | | | FD093 | G1054 | DF152 | W | | |
| DR-Z 250 E | 250 | 01 | | FD164 | G1054 | 1 | DF301 | FLW | | | FD093 | G1396 | | | | |
| RM 250 | 250 | 93 | 95 | FD086 | G1054 | 1 | DF301 | FLW | FLS | FRS | FD114 | G1396 | DF302 | W | | |
| RM 250 | 250 | 96 | 98 | FD164 | G1054 | 1 | DF301 | FLW | FLS | FRS | FD093 | G1396 | DF302 | W | | KG301 |
| RM 250 | 250 | 99 | 03 | FD164 | G1054 | 1 | DF301 | FLW | FLS | FRS | FD093 | G1396 | DF338 | W | | KG301 |
| RM 250 | 250 | 04 | 05 | FD164 | G1396 | 1 | DF301 | FLW | FLS | FRS | FD093 | G1396 | DF338 | W | | KG301 |
| RM 250 | 250 | 06 | | FD164 | G1396 | 1 | DF301 | FLW | FLS | FRS | FD093 | G1396 | DF354 | W | | KG301 |
| RM 250 Z | 250 | 04 | 06 | FD164 | G1396 | 1 | DF182 | FLW | FLS | FRS | FD286 | G1396 | DF179 | W | WLL | |
| RM 250 Z | 250 | 07 | 12 | FD164 | G1396 | 1 | DF349 | FLW | FLS | FRS | FD286 | G1396 | DF350 | W | WLL | KG349 |
| RM 250 Z | 250 | 13 | | FD164 | G1396 | 1 | DF349 | FLW | FLS | FRS | FD286 | G1396 | DF350 | W | WLL | KG349 |
| RMX 250 | 250 | 95 | | FD086 | G1054 | 1 | DF301 | FLW | FLS | FRS | FD114 | G1396 | DF302 | W | | |
| RMX S | 250 | 92 | 94 | FD086 | G1054 | 1 | DF301 | FLW | FLS | FRS | FD114 | G1396 | DF302 | W | | |
| DR 350 S | 350 | 90 | 92 | FD086 | G1054 | 1 | DF306 | W | | | FD114 | G1396 | | | | |
| DR 350 S, SH | 350 | 93 | 93 | FD086 | G1054 | 1 | DF306 | W | | | FD114 | G1396 | | | | |
| DR 350 SE | 350 | 94 | | FD086 | G1054 | 1 | DF306 | W | | | FD114 | G1396 | | | | |
| DR-Z 400 E | 400 | 00 | | FD164 | G1054 | 1 | DF301 | FLW | | | FD093 | G1396 | DF302 | W | | |
| DR-Z 400 S | 400 | 00 | | FD164 | G1054 | 1 | DF301 | FLW | | | FD093 | G1396 | DF302 | W | | |
| DR-Z 400 S SUPER MOTARD | 400 | 05 | | FD164 | G1054 | 1 | | | | | FD093 | G1054 | DF338 | W | | |
| RM 450 Z | 450 | 05 | | FD164 | G1396 | 1 | DF349 | FLW | FLS | FRS | FD286 | G1396 | DF350 | W | WLL | KG349 |
| RMX 450 Z | 450 | 10 | | FD164 | G1396 | 1 | DF349 | FLW | FLS | FRS | FD286 | G1396 | DF350 | W | WLL | KG349 |
| DR 650 | 650 | 96 | | FD164 | G1054 | 1 | DF327 | FLW | | | FD114 | G1396 | DF328 | W | | |
| **TM** | | | | | | | | | | | | | | | | |
| 80 GS, MC | 80 | 90 | 92 | FD089 | G1054 | 1 | | | | | FD075 | G1396 | | | | |
| 80 GS, MC | 80 | 93 | | FD138 | G1054 | 1 | | | | | FD165 | G1396 | | | | |
| JUNIOR 80 | 80 | 05 | | FD138 | G1396 | 1 | | | | | FD093 | G1396 | | | | |
| JUNIOR 85 | 85 | 05 | | FD138 | G1396 | 1 | | | | | FD093 | G1396 | | | | |
| MX 85 | 85 | 01 | 04 | FD138 | G1054 | 1 | | | | | FD165 | G1396 | | | | |
| MX 85 | 85 | 05 | | FD138 | G1396 | 1 | DF828 | W | FLW | | FD286 | G1396 | | | | |
| JUNIOR 100 | 100 | 05 | | FD138 | G1396 | 1 | | | | | FD093 | G1396 | | | | |
| 125 CROSS | 125 | 00 | | FD138 | G1054 | 1 | DF828 | W | FLW | | FD165 | G1396 | | | | |
| 125 ENDURO/MX | 125 | 00 | | FD138 | G1054 | 1 | DF828 | W | FLW | | FD165 | G1396 | | | | |
| 125 GS, MC | 125 | 90 | 92 | FD089 | G1054 | 1 | | | | | FD075 | G1396 | | | | |
| 125 GS, MC | 125 | 93 | | FD138 | G1054 | 1 | | | | | FD165 | G1396 | | | | |
| EN 125 | 125 | 04 | 14 | FD138 | G1396 | 1 | DF828 | W | FLW | | FD286 | G1396 | DF829 | W | WLL | |
| MX 125 | 125 | 05 | 14 | FD138 | G1396 | 1 | DF828 | W | FLW | | FD286 | G1396 | DF829 | W | WLL | |
| EN144 | 144 | 14 | | FD138 | G1396 | | DF828 | W | FLW | | FD286 | G1396 | DF829 | W | WLL | |
| MX 144 | 144 | 15 | | FD138 | G1396 | 1 | DF828 | W | FLW | | FD286 | G1396 | DF829 | W | WLL | |
| 250 ENDURO 4T | 250 | 00 | | FD138 | G1054 | 1 | DF828 | W | FLW | | FD165 | G1396 | | | | |
| EN 250 | 250 | 04 | 14 | FD138 | G1396 | 1 | DF828 | W | FLW | | FD286 | G1396 | DF829 | W | WLL | |
| EN 250 F | 250 | 04 | 14 | FD138 | G1396 | 1 | DF828 | W | FLW | | FD286 | G1396 | DF829 | W | WLL | |
| MX 250 | 250 | 05 | 14 | FD138 | G1396 | 1 | DF828 | W | FLW | | FD286 | G1396 | DF829 | W | WLL | |
| MX 250 F | 250 | 05 | 14 | FD138 | G1396 | 1 | DF828 | W | FLW | | FD286 | G1396 | DF829 | W | WLL | |
| 300 ENDURO 4T | 300 | 01 | | FD138 | G1054 | 1 | DF828 | W | FLW | | FD165 | G1396 | | | | |
| EN 300 | 300 | 14 | | FD138 | G1396 | 1 | DF828 | W | FLW | | FD286 | G1396 | DF829 | W | WLL | |
| MX 300 | 300 | 14 | | FD138 | G1396 | 1 | DF828 | W | FLW | | FD286 | G1396 | DF829 | W | WLL | |
| 400 4T E/CROSS | 400 | 00 | 02 | FD138 | G1054 | 1 | DF828 | W | FLW | | FD165 | G1396 | | | | |
| 400 4T E/CROSS | 400 | 03 | | FD138 | G1396 | 1 | DF828 | W | FLW | | FD093 | G1396 | | | | |
| EN 450 F | 450 | 04 | 14 | FD138 | G1396 | 1 | DF828 | W | FLW | | FD286 | G1396 | DF829 | W | WLL | |
| MX 450 F | 450 | 05 | 14 | FD138 | G1396 | 1 | DF828 | W | FLW | | FD286 | G1396 | DF829 | W | WLL | |
| SMR 450 F | 450 | 14 | | FD262 | G1054 | 1 | | | | | FD286 | G1054 | DF829 | W | WLL | |
| SMX 450 F | 450 | 04 | 14 | FD262 | G1054 | 1 | DF828 | W | FLW | | FD286 | G1054 | DF829 | W | WLL | |
| 530 4T E/CROSS | 530 | 03 | | FD138 | G1396 | 1 | DF828 | W | FLW | | FD093 | G1396 | | | | |
| EN 530 F | 530 | 04 | 14 | FD138 | G1396 | 1 | DF828 | W | FLW | | FD286 | G1396 | DF829 | W | WLL | |
| MX 530 F | 530 | 05 | 14 | FD138 | G1396 | 1 | DF828 | W | FLW | | FD286 | G1396 | DF829 | W | WLL | |
| **VERTEMATI** | | | | | | | | | | | | | | | | |
| 492 ENDURO | 500 | 99 | 00 | FD138 | G1054 | 1 | | | | | FD165 | G1396 | | | | |

| BRAND & MODEL • MARCA Y MODELO<br>MARCA E MODELLO • MARQUE ET MODÉLE | C.C. | YEAR | | FRONT | | | | | | | REAR | | | | | KITS |
|---|---|---|---|---|---|---|---|---|---|---|---|---|---|---|---|---|
| | | | | FD MF | COMPOUND RECOMMENDED | N° | DF | OE | UPGRADE 1 | UPGRADE 2 | FD MF | COMPOUND RECOMMENDED | DF | OE | UPGRADE | KG |
| 495 CROSS | 500 | 99 | 00 | FD138 | G1054 | 1 | | | | | FD165 | G1396 | | | | |
| C500 | 500 | 01 | 01 | FD138 | G1054 | 1 | | | | | FD165 | G1396 | | | | |
| E 510 | 500 | 02 | | FD138 | G1054 | 1 | | | | | FD165 | G1396 | | | | |
| **VERTIGO** | | | | | | | | | | | | | | | | |
| COMBAT CAMO | 300 | 15 | | FD460 | G1805 | 1 | | | | | FD224 | G1805 | | | | |
| COMBAT ICE HELL | 300 | 15 | | FD460 | G1805 | 1 | | | | | FD224 | G1805 | | | | |
| **VOR** | | | | | | | | | | | | | | | | |
| MX 350 | 350 | 01 | | FD138 | G1054 | 1 | | | | | FD165 | G1396 | DF887 | W | | |
| EN 400 | 400 | 00 | | FD138 | G1054 | 1 | | | | | FD165 | G1396 | DF887 | W | | |
| EN 450 | 450 | 01 | | FD138 | G1054 | 1 | | | | | FD165 | G1396 | DF887 | W | | |
| EN 503 | 503 | 00 | | FD138 | G1054 | 1 | | | | | FD165 | G1396 | DF887 | W | | |
| MX 503 | 503 | 00 | | FD138 | G1054 | 1 | | | | | FD165 | G1396 | DF887 | W | | |
| EN 530 | 530 | 01 | | FD138 | G1054 | 1 | | | | | FD165 | G1396 | DF887 | W | | |
| **YAMAHA** | | | | | | | | | | | | | | | | |
| YZ 80 | 80 | 93 | 02 | FD097 | G1054 | 1 | DF489 | W | | | FD299 | G1054 | DF497 | W | | |
| YZ 85 / LW | 85 | 03 | | FD097 | G1054 | 1 | DF489 | W | | | FD299 | G1054 | DF497 | W | | |
| WR 125 | 125 | 91 | | FD086 | G1054 | 1 | DF450 | W | | | FD114 | G1396 | DF451 | W | | |
| WR 125 R | 125 | 09 | | FD266 | G1054 | 1 | | | | | FD165 | G1054 | | | | |
| YZ 125 | 125 | 08 | | FD364 | G1396 | 1 | DF301 | FLW | FLS | FRS | FD286 | G1396 | DF499 | W | WLL | KG301 |
| YZ 125, WR | 125 | 90 | 91 | FD086 | G1054 | 1 | DF457 | W | | | FD114 | G1396 | DF451 | W | | |
| YZ 125, WR | 125 | 92 | 97 | FD086 | G1054 | 1 | DF462 | W | | | FD114 | G1396 | DF451 | W | | |
| YZ 125, WR | 125 | 98 | 00 | FD164 | G1054 | 1 | DF462 | W | | | FD093 | G1396 | DF479 | W | | |
| YZ 125, WR | 125 | 01 | 02 | FD164 | G1054 | 1 | DF301 | FLW | FLS | FRS | FD093 | G1396 | DF479 | W | | KG301 |
| YZ 125, WR | 125 | 03 | 03 | FD164 | G1396 | 1 | DF301 | FLW | FLS | FRS | FD286 | G1396 | DF499 | W | WLL | KG301 |
| YZ 125, WR | 125 | 04 | 07 | FD164 | G1396 | 1 | DF301 | FLW | FLS | FRS | FD286 | G1396 | DF499 | W | WLL | KG301 |
| WR 200 R | 200 | 93 | | FD086 | G1054 | 1 | DF464 | W | | | FD114 | G1396 | DF451 | W | | |
| TT 225 R | 225 | 00 | | FD079 | G1054 | 1 | | | | | MF458 | G2165 | - | | | |
| TT 250 R | 250 | 93 | | FD086 | G1054 | 1 | DF464 | W | | | FD114 | G1396 | DF451 | W | | |
| WR 250 | 250 | 91 | | FD086 | G1054 | 1 | DF450 | W | | | FD114 | G1396 | DF451 | W | | |
| WR 250 F 4T | 250 | 03 | 06 | FD164 | G1396 | 1 | DF301 | FLW | FLS | FRS | FD286 | G1396 | DF499 | W | WLL | KG301 |
| WR 250 F 4T | 250 | 07 | | FD364 | G1396 | 1 | DF301 | FLW | FLS | FRS | FD286 | G1396 | DF499 | W | WLL | KG301 |
| WR 250 X | 250 | 08 | | FD266 | G1054 | 1 | | | | | FD286 | G1396 | | | | |
| YZ 250 | 250 | 08 | | FD364 | G1396 | 1 | DF301 | FLW | FLS | FRS | FD286 | G1396 | DF499 | W | WLL | KG301 |
| YZ 250 F | 250 | 03 | 06 | FD164 | G1396 | 1 | DF301 | FLW | FLS | FRS | FD286 | G1396 | DF499 | W | WLL | KG301 |
| YZ 250 F | 250 | 07 | 08 | FD364 | G1396 | 1 | DF301 | FLW | FLS | FRS | FD286 | G1396 | DF499 | W | WLL | KG301 |
| YZ 250 F | 250 | 09 | | FD364 | G1396 | 1 | DF301 | FLW | FLS | FRS | FD286 | G1396 | DF499 | W | WLL | KG301 |
| YZ 250 F, WR F 4T | 250 | 00 | 00 | FD164 | G1054 | 1 | DF462 | W | | | FD093 | G1396 | DF479 | W | | |
| YZ 250 F, WR F 4T | 250 | 01 | 02 | FD164 | G1054 | 1 | DF301 | FLW | FLS | FRS | FD093 | G1396 | DF479 | W | | KG301 |
| YZ 250 F, WR F 4T | 250 | 03 | 06 | FD164 | G1396 | 1 | DF301 | FLW | FLS | FRS | FD286 | G1396 | DF499 | W | WLL | KG301 |
| YZ 250, W, RALLY | 250 | 90 | 91 | FD086 | G1054 | 1 | DF450 | W | | | FD114 | G1396 | DF451 | W | | |
| YZ 250, WR | 250 | 92 | 98 | FD086 | G1054 | 1 | DF462 | W | | | FD114 | G1396 | DF451 | W | | |
| YZ 250, WR | 250 | 99 | 00 | FD164 | G1054 | 1 | DF462 | W | | | FD093 | G1396 | DF479 | W | | |
| YZ 250, WR | 250 | 01 | 02 | FD164 | G1054 | 1 | DF301 | FLW | FLS | FRS | FD093 | G1396 | DF479 | W | | KG301 |
| YZ 360, RALLY | 360 | 90 | | FD086 | G1054 | 1 | DF450 | W | | | FD114 | G1396 | DF451 | W | | |
| WR 400 F | 400 | 98 | 98 | FD164 | G1054 | 1 | DF462 | W | | | FD093 | G1396 | DF451 | W | | |
| WR 400 F | 400 | 99 | 99 | FD164 | G1054 | 1 | DF462 | W | | | FD093 | G1396 | DF479 | W | | |
| YZ 400 F | 400 | 98 | 98 | FD164 | G1054 | 1 | DF462 | W | | | FD093 | G1396 | DF451 | W | | |
| YZ 400 F | 400 | 99 | 99 | FD164 | G1054 | 1 | DF462 | W | | | FD093 | G1396 | DF479 | W | | |
| WR 426 F | 425 | 00 | 01 | FD164 | G1054 | 1 | DF301 | FLW | FLS | FRS | FD093 | G1396 | DF479 | W | | KG301 |
| WR 426 F | 425 | 02 | 02 | FD164 | G1054 | 1 | DF301 | FLW | FLS | FRS | FD093 | G1396 | DF499 | W | WLL | KG301 |
| YZ 426 F | 425 | 00 | 01 | FD164 | G1054 | 1 | DF301 | FLW | FLS | FRS | FD093 | G1396 | DF479 | W | | KG301 |
| YZ 426 F | 425 | 02 | 02 | FD164 | G1054 | 1 | DF301 | FLW | FLS | FRS | FD093 | G1396 | DF499 | W | WLL | KG301 |
| WR 450 F | 450 | 03 | 11 | FD164 | G1396 | 1 | DF301 | FLW | FLS | FRS | FD286 | G1396 | DF499 | W | WLL | KG301 |
| WR 450 F | 450 | 12 | | FD164 | G1396 | 1 | DF301 | FLW | FLS | FRS | FD286 | G1396 | DF499 | W | WLL | KG301 |
| YZ 450 F | 450 | 03 | 07 | FD164 | G1396 | 1 | DF301 | FLW | FLS | FRS | FD286 | G1396 | DF499 | W | WLL | KG301 |
| YZ 450 F | 450 | 08 | 11 | FD364 | G1396 | 1 | DF301 | FLW | FLS | FRS | FD286 | G1396 | DF499 | W | WLL | KG301 |
| YZ 450 F | 450 | 12 | | FD364 | G1396 | 1 | DF301 | FLW | FLS | FRS | FD286 | G1396 | DF499 | W | WLL | KG301 |
| YZ 490 RALLY | 490 | 90 | | FD080 | G1054 | 1 | | | | | MF456 | G2165 | - | | | |
| WR 500 | 500 | 92 | | FD086 | G1054 | 1 | DF457 | W | | | FD114 | G1396 | DF451 | W | | |
| TT 600 | 600 | 90 | 92 | FD080 | G1054 | 1 | DF457 | W | | | MF451 | G2165 | - | | | |
| TT 600 | 600 | 93 | 94 | FD086 | G1054 | 1 | DF452 | W | | | FD114 | G1396 | DF451 | W | | |
| TT 600 | 600 | 95 | 97 | FD138 | G1054 | 1 | DF452 | W | | | FD165 | G1396 | DF451 | W | | |
| TT 600 R | 600 | 99 | 02 | FD138 | G1054 | 1 | DF452 | W | | | FD165 | G1396 | DF451 | W | | |
| TT 600 RE | 600 | 03 | | FD138 | G1396 | 1 | DF452 | W | | | FD165 | G1396 | DF451 | W | | |



**OE:** Original equipment (original replacement disc) • **OE:** Equipo original (disco de remplazo del original) For other models years previous to 1990 visit **www.galferonline.es** • Para otros modelos anteriores al año 1990 visitar **www.galferonline.es**
For consult TÜV (ABE) type approvals visit **www.galfermoto.com --> DOWNALOAD --> TÜV CERTIFICATIONS** • Para consultar las homologaciones TÜV (ABE) visitar **www.galfermoto.com --> DESCARGAS --> CERTIFICACIONES TÜV**

## FD 012

mm 39,8 x 56,3 | 7,0 | A | A

G1054 | G1805 | G1371 |

| BRAND MARCA | MODEL MODELO | C.C. | YEAR | FRONT | REAR |
|---|---|---|---|---|---|
| **ALFER** | | | | | |
| | 300 TX | 300 | 90- | FD065 | FD012 |
| **ATK** | | | | | |
| | TODOS MODELOS | | 92-93 | FD085 | FD012 |
| **CAGIVA** | | | | | |
| | W8 125 | 125 | 92- | FD089 | FD012 |
| **KTM** | | | | | |
| | 80 MX | 80 | 92-01 | FD012 | MF |

## FD 048

mm 35,9 x 51,5 | 6,0 | A | A

G1054 | G1805 |

| BRAND MARCA | MODEL MODELO | C.C. | YEAR | FRONT | REAR |
|---|---|---|---|---|---|
| **APRILIA** | | | | | |
| | CLIMBER 250 | 250 | 90-91 | FD065 | FD048 |
| | CLIMBER 250 R | 250 | 92- | FD065 | FD048 |
| | CLIMBER 280 R | 280 | 93- | FD065 | FD048 |
| **CAGIVA** | | | | | |
| | W8 PRO ACTION | 125 | 91- | FD089 | FD048 |
| **FANTIC** | | | | | |
| | CABALLERO RC 125 | 125 | 94-96 | FD074 | FD048 |
| **KTM** | | | | | |
| | 65 SX | 65 | 00-01 | FD065 | FD048 |
| | 65 SX | 65 | 02-03 | FD265 | FD048 |

## FD 065

mm 36,0 x 45,0 | 6,0 | A | A

G1054 | G1805 | G1380 |

| BRAND MARCA | MODEL MODELO | C.C. | YEAR | FRONT | REAR |
|---|---|---|---|---|---|
| **AJP** | | | | | |
| | MX 200 | 200 | 09- | FD162 | FD065 |
| **ALFER** | | | | | |
| | 300 TX | 300 | 90- | FD065 | FD012 |
| **APRILIA** | | | | | |
| | CLIMBER 250 | 250 | 90-91 | FD065 | FD048 |
| | CLIMBER 250 R | 250 | 92- | FD065 | FD048 |
| | CLIMBER 280 R | 280 | 93- | FD065 | FD048 |
| **BETA** | | | | | |
| | REV 3 | 80 | 00-07 | FD065 | FD065 |
| | SYNT 125 | 125 | 94- | FD065 | FD151 |
| | TR 35 125 | 125 | 91- | FD065 | FD102 |
| | ZERO 125 | 125 | 92- | FD065 | FD102 |
| | 200 ALP | 200 | 00-07 | FD065 | FD065 |
| | 240 ST | 240 | 92- | FD065 | FD102 |
| | TECHNO 250 | 250 | 94- | FD065 | FD151 |
| | SYNT 260 | 260 | 92-93 | FD065 | FD102 |
| | SYNT 260 | 260 | 94- | FD065 | FD151 |
| | ZERO | 260 | 98- | FD065 | FD065 |
| | ZERO 93 GARA | 260 | 93-97 | FD065 | FD159 |
| **BLATA** | | | | | |
| | MOTARD 125 | 125 | 07- | FD341 | FD065 |
| **BULTACO** | | | | | |
| | SHERCO 125 | 125 | 00- | FD065 | FD065 |
| | SHERCO 200 | 200 | 00- | FD065 | FD065 |
| | SHERCO 2.5 | 250 | 99- | FD065 | FD065 |
| | SHERCO 290 | 290 | 00- | FD065 | FD065 |
| **CH RACING** | | | | | |
| | WSM 125 MOTARD | 125 | 05- | FD133 | FD065 |

| | | | | |
|---|---|---|---|---|
| **CLIPIC** | | | | |
| MINJ 125 | 125 | 06- | FD065 | FD065 |
| MINJ 200 | 200 | 06- | FD065 | FD065 |
| **CPI** | | | | |
| SUPERMOTO 125 | 125 | 07- | FD065 | FD065 |
| **FANTIC** | | | | |
| 80 K-ROO | 80 | 92- | FD065 | FD065 |
| 80 TRIAL | 80 | 92- | FD065 | FD065 |
| 125 K-ROO | 125 | 92- | FD065 | FD065 |
| 125.7 TRIAL | 125 | 90- | FD065 | FD065 |
| 125.9 TRIAL | 125 | 90- | FD065 | FD065 |
| 247 TRIAL | 247 | 90- | FD065 | FD065 |
| 249 SECTION | 250 | 95- | FD065 | FD065 |
| 250 COACH | 250 | 92-93 | FD065 | MF712 |
| 250 COACH | 250 | 95- | FD065 | FD065 |
| 309 TRIAL | 309 | 91- | FD065 | FD065 |
| **GARELLI** | | | | |
| 125 TRIAL SECTION | 125 | 95- | FD065 | FD065 |
| 249 TRIAL SECTION | 249 | 95- | FD065 | FD065 |
| **GAS GAS** | | | | |
| JT 12 125 | 125 | 95- | FD065 | FD065 |
| JTR 140 CONTACT | 140 | 96- | FD065 | FD065 |
| JT 16 150 | 150 | 95- | FD065 | FD065 |
| JT 160 | 160 | 95- | FD065 | FD065 |
| 200 PAMPERA | 200 | 99- | FD065 | FD065 |
| CONTAC JT 250 | 250 | 94- | FD065 | FD065 |
| CONTAC T25 | 250 | 93-93 | FD065 | FD065 |
| JT 25 | 250 | 91- | FD065 | FD065 |
| JTR 250 CONTACT | 250 | 96- | FD065 | FD065 |
| JTR 270 CONTACT | 270 | 96-97 | FD065 | FD065 |
| TXT 270 | 270 | 98-98 | FD065 | FD065 |
| JT 32 | 320 | 91- | FD065 | FD065 |
| JT 350 | 350 | 95- | FD065 | FD065 |
| JTR 370 CONTACT | 370 | 96- | FD065 | FD065 |
| **KTM** | | | | |
| EXC 50 | 50 | 99- | FD133 | FD065 |
| 60 SX | 60 | 99- | FD065 | MF |
| 65 SX | 65 | 00-01 | FD065 | FD048 |
| **MONKEY BIKE** | | | | |
| MB 200 SM | 200 | 06- | FD162 | FD065 |
| MB 200 TR | 200 | 06- | FD162 | FD065 |
| **MOTORHISPANIA** | | | | |
| DUNA DUAL SPORT | 125 | 09- | FD162 | FD065 |
| **RIEJU** | | | | |
| TANGO OFF ROAD 250 | 250 | 09- | FD220 | FD065 |
| TANGO ROAD 250 | 250 | 09- | FD220 | FD065 |
| **SCORPA** | | | | |
| TY S 125 F | 125 | 05- | FD065 | FD224 |
| TY S 175 F | 175 | 06- | FD065 | FD224 |
| 2S5 WORKS | 250 | 95- | FD065 | FD065 |
| EASY RACE 280 | 280 | 99- | FD065 | FD065 |
| **SHERCO** | | | | |
| 1.25 | 125 | 99-01 | FD133 | FD065 |
| 2.0 | 200 | 99-05 | FD065 | FD065 |
| 2.5 | 250 | 99-01 | FD065 | FD065 |
| 2.9 | 290 | 99-00 | FD065 | FD065 |
| **SUMCO** | | | | |
| JUNIOR CROSS 90 | 90 | 06- | FD065 | MF |

## FD 068

mm 69,6 x 51,0 | 8,2 | A | A

G1054 | G1370 | G1375 | G1003 | G1300

| BRAND MARCA | MODEL MODELO | C.C. | YEAR | FRONT | REAR |
|---|---|---|---|---|---|
| **GAS GAS** | | | | | |
| | HALLEY 125 SM | 125 | 09- | FD068 | FD093 |
| | SM 125 | 125 | 05- | FD068 | FD093 |
| | FSR 450 | 450 | 07- | FD068 | FD093 |
| | SM 450 | 450 | 05- | FD068 | FD093 |
| **HUSABERG** | | | | | |
| | 450 FS | 450 | 04-04 | FD068 | FD165 |
| **HUSQVARNA** | | | | | |
| | 450 SM R | 450 | 01-04 | FD068 | FD165 |

| | | | | |
|---|---|---|---|---|
| **SHERCO** | | | | |
| 4.5 4T SM | 450 | 05-08 | FD068 | FD286 |

## FD 073

mm 77,4 x 42,3 | 7,0 | A | A

G1054 | G1805 |

| BRAND MARCA | MODEL MODELO | C.C. | YEAR | FRONT | REAR |
|---|---|---|---|---|---|
| **CCM** | | | | | |
| | C-XR 125 M | 125 | 08- | FD073 | FD095 |
| | C-XR 125 S | 125 | 08- | FD073 | FD095 |
| | C-XR 230 E | 230 | 07- | FD073 | FD095 |
| | C-XR 230 M | 230 | 07- | FD073 | FD095 |
| | C-XR 230 S | 230 | 07- | FD073 | FD095 |

## FD 074

mm 79,0 x 47,8 | 7,0 | A | A

G1054 | G1805 | G1370 |

| BRAND MARCA | MODEL MODELO | C.C. | YEAR | FRONT | REAR |
|---|---|---|---|---|---|
| **FANTIC** | | | | | |
| | CABALLERO RC 125 | 125 | 94-96 | FD074 | FD048 |
| **GAS GAS** | | | | | |
| | ENDUCROSS 80 | 80 | 94- | FD138 | FD074 |
| | EC 125 | 125 | 94-00 | FD138 | FD074 |
| | MC 125 | 125 | 94-00 | FD138 | FD074 |

## FD 075

mm 55,8 x 37,2 | 10,0 | A | B

mm 85,0 x 42,1 | 8,0 | A | B

G1054 | G1805 | G1396 |

| BRAND MARCA | MODEL MODELO | C.C. | YEAR | FRONT | REAR |
|---|---|---|---|---|---|
| **ALFER** | | | | | |
| | 250 AR | 250 | 92-92 | FD089 | FD075 |
| | 250 AR | 250 | 93- | FD138 | FD075 |
| | 250 VR | 250 | 94-94 | FD138 | FD075 |
| **BETA** | | | | | |
| | MOTARD 4.0 | 350 | 05-06 | FD337 | FD075 |
| **CAGIVA** | | | | | |
| | WMX 125 | 125 | 90- | FD089 | FD075 |
| **FACTORY** | | | | | |
| | YR 125 CB | 125 | 04- | FD162 | FD075 |
| **FANTIC** | | | | | |
| | SUPERSEI MOTARD | 125 | 07- | FD162 | FD075 |
| **GAS GAS** | | | | | |
| | ENDURO TT 125 | 125 | 93- | FD138 | FD075 |
| | EC 250 | 250 | 95-98 | FD138 | FD075 |
| | MC 250 | 250 | 95-98 | FD138 | FD075 |
| **HUSABERG** | | | | | |
| | 350 MC | 350 | 91-92 | FD089 | FD075 |
| | 500 CROSS | 500 | 93-93 | FD138 | FD075 |
| | 500 MC | 500 | 91-92 | FD089 | FD075 |
| | 501 MC ENDURO | 501 | 91-92 | FD089 | FD075 |
| **HUSQVARNA** | | | | | |
| | 125 CR | 125 | 91-91 | FD089 | FD075 |
| | 125 CR | 125 | 93-99 | FD086 | FD075 |
| | 125 CR, WR | 125 | 93-99 | FD086 | FD075 |
| | 125 WR | 125 | 91- | FD089 | FD075 |
| | 125 WR | 125 | 93-99 | FD086 | FD075 |

| | | | | |
|---|---|---|---|---|
| 250 CR | 250 | 91- | FD089 | FD075 |
| 250 CR, WR | 250 | 93-99 | FD086 | FD075 |
| 250 WR | 250 | 91- | FD089 | FD075 |
| 260 WR | 260 | 91- | FD089 | FD075 |
| 350 TE 4T | 350 | 91-94 | FD089 | FD075 |
| 360 CR | 360 | 92-94 | FD089 | FD075 |
| 510 TE | 510 | 90-94 | FD089 | FD075 |
| 610 TC, TE 4T | 610 | 91-94 | FD089 | FD075 |
| **KTM** | | | | |
| 125 ENDURO | 125 | 92-92 | FD128 | FD075 |
| 125 ENDURO | 125 | 93- | FD138 | FD075 |
| 125 GS | 125 | 91-92 | FD128 | FD075 |
| 125 GS | 125 | 93-93 | FD138 | FD075 |
| 125 MX | 125 | 92-95 | FD138 | FD075 |
| 125 SX | 125 | 93-93 | FD138 | FD075 |
| 250 ENDURO | 250 | 92-92 | FD128 | FD075 |
| 250 ENDURO | 250 | 93- | FD138 | FD075 |
| 250 GS | 250 | 91-92 | FD128 | FD075 |
| 250 GS | 250 | 93-93 | FD138 | FD075 |
| 250 MX | 250 | 92-92 | FD138 | FD075 |
| 250 SX, EGS, EXC | 250 | 93-93 | FD138 | FD075 |
| 300 ENDURO | 300 | 92-92 | FD128 | FD075 |
| 300 ENDURO | 300 | 93- | FD138 | FD075 |
| 300 GS | 300 | 91- | FD128 | FD075 |
| 300 SX, EGS, EXC | 300 | 93-03 | FD138 | FD075 |
| 350 MX | 350 | 91-91 | FD075 | FD075 |
| 350 MX | 350 | 92- | FD138 | FD075 |
| 500 MX | 500 | 92- | FD138 | FD075 |
| 500 SX | 500 | 93- | FD138 | FD075 |
| 600 4T GARA | 600 | 91-92 | FD128 | FD075 |
| 600 4T GS | 600 | 93-93 | FD138 | FD075 |
| 600 MX LC4 | 600 | 90- | FD075 | FD075 |
| **MOTORHISPANIA** | | | | |
| MH 10 PRO 125 LC | 125 | 12- | FD162 | FD075 |
| MH 10 PRO 125 LC SM | 125 | 12- | FD341 | FD075 |
| **TM** | | | | |
| 80 GS, MC | 80 | 90-92 | FD089 | FD075 |
| 125 GS, MC | 125 | 90-92 | FD089 | FD075 |

## FD 076

mm: 46,4 x 45,3 | 7,8 | A | A

G1054 | G1805 | G1396 | G1397

| BRAND MARCA | MODEL MODELO | C.C. | YEAR | FRONT | REAR |
|---|---|---|---|---|---|
| **HM** | | | | | |
| CRF 150 R / R2 | | 150 | 08- | FD076 | FD278 |
| **HONDA** | | | | | |
| CR 80 R | | 80 | 97-02 | FD076 | FD093 |
| CR 85 R | | 85 | 03-05 | FD076 | FD093 |
| CR 85 R | | 85 | 06- | FD076 | FD093 |
| CRF 150 R | | 150 | 07- | FD076 | FD278 |
| **HUSQVARNA** | | | | | |
| 360 WR | | 360 | 92-94 | FD086 | FD076 |
| **KAWASAKI** | | | | | |
| KX 80 | | 80 | 91-92 | FD094 | FD076 |
| KX 80 R7 KX 80-II | | 80 | 97-99 | FD204 | FD076 |
| KX 85 | | 85 | 00-03 | FD204 | FD076 |
| KX 85 | | 85 | 03- | FD204 | FD076 |
| KX 100 | | 100 | 97- | FD204 | FD076 |

## FD 079

mm: 71,3 x 36,2 | 8,5 | A | A

G1054 | G1805 | G1370 |

| BRAND MARCA | MODEL MODELO | C.C. | YEAR | FRONT | REAR |
|---|---|---|---|---|---|
| **YAMAHA** | | | | | |
| TT 225 R | | 225 | 00- | FD079 | MF458 |

## FD 080

mm: 91,3 x 29,9 | 7,0 | A | A

G1054 |

| BRAND MARCA | MODEL MODELO | C.C. | YEAR | FRONT | REAR |
|---|---|---|---|---|---|
| **YAMAHA** | | | | | |
| YZ 490 RALLY | | 490 | 90- | FD080 | MF456 |
| TT 600 | | 600 | 90-92 | FD080 | MF451 |

## FD 084

mm: 31,6 x 57,0 | 5,5 | A | A

G1054 | G1805 |

| BRAND MARCA | MODEL MODELO | C.C. | YEAR | FRONT | REAR |
|---|---|---|---|---|---|
| **KTM** | | | | | |
| 50 GO | | 50 | 95- | FD084 | MF630 |

## FD 085

mm: 67,5 x 50,7 | 7,5 | A | A

G1054 |

| BRAND MARCA | MODEL MODELO | C.C. | YEAR | FRONT | REAR |
|---|---|---|---|---|---|
| **ATK** | | | | | |
| TODOS MODELOS | | | 92-93 | FD085 | FD012 |

## FD 086

mm: 77,4 x 42,3 | 7,7 | A | B

mm: 98,8 x 42,3 | 7,5 | A | B

G1054 | G1805 | G1370 | G1396 | G1397

| BRAND MARCA | MODEL MODELO | C.C. | YEAR | FRONT | REAR |
|---|---|---|---|---|---|
| **ATK** | | | | | |
| TODOS MODELOS | | | 93-96 | FD086 | FD086 |
| **HUSQVARNA** | | | | | |
| 125 CR | | 125 | 93-99 | FD086 | FD075 |
| 125 CR, WR | | 125 | 93-99 | FD086 | FD075 |
| 125 WR | | 125 | 93-99 | FD086 | FD075 |
| 250 CR, WR | | 250 | 93-99 | FD086 | FD075 |
| 360 WR | | 360 | 92-94 | FD086 | FD076 |
| 610 TE | | 610 | 92-94 | FD086 | FD095 |
| **KAWASAKI** | | | | | |
| KX 60 | | 60 | 94- | FD086 | MF |
| KLX 125 | | 125 | 10- | FD086 | FD095 |
| KLX 140 L | | 140 | 08- | FD086 | FD095 |
| KDX 200 SR | | 200 | 90- | FD086 | FD114 |
| KDX 250 R | | 250 | 92- | FD086 | FD114 |
| KLX 250 | | 250 | 09- | FD086 | FD093 |
| KLX 250 R | | 250 | 92- | FD086 | FD114 |
| KLX 250 SF | | 250 | 09- | FD086 | FD093 |
| **KREIDLER** | | | | | |
| SUPERMOTO 250 DD | | 250 | 08- | FD086 | FD095 |
| **SUZUKI** | | | | | |
| DR 250 S | | 250 | 90-00 | FD086 | FD114 |
| RM 250 | | 250 | 93-95 | FD086 | FD114 |
| RMX 250 | | 250 | 95- | FD086 | FD114 |
| RMX S | | 250 | 92-94 | FD086 | FD114 |
| DR 350 S | | 350 | 90-92 | FD086 | FD114 |
| DR 350 S, SH | | 350 | 93-93 | FD086 | FD114 |
| DR 350 SE | | 350 | 94- | FD086 | FD114 |
| **YAMAHA** | | | | | |
| WR 125 | | 125 | 91- | FD086 | FD114 |
| YZ 125, WR | | 125 | 90-91 | FD086 | FD114 |
| YZ 125, WR | | 125 | 92-97 | FD086 | FD114 |
| WR 200 R | | 200 | 93- | FD086 | FD114 |
| TT 250 R | | 250 | 93- | FD086 | FD114 |
| WR 250 | | 250 | 91- | FD086 | FD114 |
| YZ 250, W, RALLY | | 250 | 90-91 | FD086 | FD114 |
| YZ 250, WR | | 250 | 92-98 | FD086 | FD114 |
| YZ 360, RALLY | | 360 | 90- | FD086 | FD114 |
| WR 500 | | 500 | 92- | FD086 | FD114 |
| TT 600 | | 600 | 93-94 | FD086 | FD114 |

## FD 087

mm: 74,8 x 54,3 | 8,2 | A | A

G1054 | G1370 |

| BRAND MARCA | MODEL MODELO | C.C. | YEAR | FRONT | REAR |
|---|---|---|---|---|---|
| **HM** | | | | | |
| DERAPAGE 4T | | 125 | 11- | FD087 | FD252 |

## FD 089

mm: 99,8 x 46,2 | 8,3 | A | A

G1054 |

| BRAND MARCA | MODEL MODELO | C.C. | YEAR | FRONT | REAR |
|---|---|---|---|---|---|
| **ALFER** | | | | | |
| 250 AR | | 250 | 92-92 | FD089 | FD075 |
| **CAGIVA** | | | | | |
| W8 125 | | 125 | 92- | FD089 | FD012 |
| W8 PRO ACTION | | 125 | 91- | FD089 | FD048 |
| WMX 125 | | 125 | 90- | FD089 | FD075 |
| W12 350 | | 350 | 93- | FD089 | FD135 |
| **HUSABERG** | | | | | |
| 350 MC | | 350 | 91-92 | FD089 | FD075 |
| 350 MC | | 350 | 94- | FD089 | FD165 |
| 500 MC | | 500 | 91-92 | FD089 | FD075 |
| 501 MC | | 501 | 94-99 | FD089 | FD165 |
| 501 MC ENDURO | | 501 | 91-92 | FD089 | FD075 |
| **HUSQVARNA** | | | | | |
| 125 CR | | 125 | 91-91 | FD089 | FD075 |
| 125 WR | | 125 | 91- | FD089 | FD075 |
| 250 CR | | 250 | 91- | FD089 | FD075 |
| 250 WR | | 250 | 91- | FD089 | FD075 |
| 260 WR | | 260 | 91- | FD089 | FD075 |
| 350 TE 4T | | 350 | 91-94 | FD089 | FD075 |
| 360 CR | | 360 | 92-94 | FD089 | FD075 |
| 510 TE | | 510 | 90-94 | FD089 | FD075 |
| 610 TC, TE 4T | | 610 | 91-94 | FD089 | FD075 |
| **TM** | | | | | |
| 80 GS, MC | | 80 | 90-92 | FD089 | FD075 |
| 125 GS, MC | | 125 | 90-92 | FD089 | FD075 |



For other models years previous to 1990 visit **www.galferonline.es** · Para otros modelos anteriores al año 1990 visitar **www.galferonline.es**

For consult TÜV (ABE) type approvals visit **www.galfermoto.com --> DOWNLOAD --> TÜV CERTIFICATIONS** · Para consultar las homologaciones TÜV (ABE) visitar **www.galfermoto.com --> DESCARGAS --> CERTIFICACIONES TÜV**

## FD 091

mm 61,0 x 62,5 | 9,6 | A | B

mm 74,0 x 48,5 | 7,2 | A | B

G1054 | G1396

| BRAND MARCA | MODEL MODELO | C.C. | YEAR | FRONT | REAR |
|---|---|---|---|---|---|
| **KAWASAKI** | | | | | |
| KX 80 | | 80 | 93-96 | FD091 | FD114 |

## FD 092

mm 94,2 x 31,8 | 7,4 | A | A[1]

G1054 | G1805 | G1396

| BRAND MARCA | MODEL MODELO | C.C. | YEAR | FRONT | REAR |
|---|---|---|---|---|---|
| **HONDA** | | | | | |
| CR 125 ENDURO | | 125 | 91- | FD092 | FD093 |
| CR 125 R | | 125 | 92-93 | FD092 | FD093 |
| CR 250 ENDURO | | 250 | 91- | FD092 | FD093 |
| CR 250 R | | 250 | 90-91 | FD092 | FD093 |
| CRE 250 | | 250 | 90- | FD092 | FD093 |
| CRM 250 R | | 250 | 92- | FD092 | FD093 |
| CR 500 ENDURO | | 500 | 91- | FD092 | FD093 |
| CR 500 R | | 500 | 90-92 | FD092 | FD093 |
| XR 600 R | | 600 | 91-92 | FD092 | FD093 |

## FD 093

mm 75,0 x 36,0 | 10,0 | A | A[1]

G1054 | G1805 | G1396

| BRAND MARCA | MODEL MODELO | C.C. | YEAR | FRONT | REAR |
|---|---|---|---|---|---|
| **AJP** | | | | | |
| PR 5 ENDURO 250 | | 250 | 09-10 | FD164 | FD093 |
| PR 5 ENDURO 250 | | 250 | 11- | FD409 | FD093 |
| PR 5 SUPERMOTO 250 | | 250 | 09-10 | FD164 | FD093 |
| PR 5 SUPERMOTO 250 | | 250 | 11- | FD409 | FD093 |
| **BETA** | | | | | |
| M 4 | | 350 | 06- | FD337 | FD093 |
| **GAS GAS** | | | | | |
| EC 125 | | 125 | 01-14 | FD164 | FD093 |
| ENDUCAMP 125 4T | | 125 | 05- | FD162 | FD093 |
| HALLEY 125 SM | | 125 | 09- | FD068 | FD093 |
| MC 125 | | 125 | 01- | FD164 | FD093 |
| SM 125 | | 125 | 01-04 | FD107 | FD093 |
| SM 125 | | 125 | 05- | FD068 | FD093 |
| EC 200 | | 200 | 01- | FD164 | FD093 |
| EC 250 | | 250 | 01- | FD164 | FD093 |
| EC 250 FSE | | 250 | 01- | FD164 | FD093 |
| EC 250 RACING | | 250 | 09- | FD164 | FD093 |
| MC 250 | | 250 | 01- | FD164 | FD093 |
| SM 250 | | 250 | 01- | FD107 | FD093 |
| EC 300 | | 300 | 01- | FD164 | FD093 |
| EC 400 FSE | | 400 | 01- | FD164 | FD093 |
| ENDUCAMP 400 4T | | 400 | 05- | FD162 | FD093 |
| PAMPERA 400 | | 400 | 06- | FD164 | FD093 |
| SM 400 | | 400 | 01- | FD107 | FD093 |
| EC 450 FSE | | 450 | 03- | FD164 | FD093 |
| FSR 450 | | 450 | 07- | FD068 | FD093 |
| HALLEY 450 SM | | 450 | 09- | FD409 | FD093 |
| SM 450 | | 450 | 05- | FD068 | FD093 |
| **HONDA** | | | | | |
| CR 80 R | | 80 | 90-96 | FD095 | FD093 |
| CR 80 R | | 80 | 97-02 | FD076 | FD093 |
| CR 85 R | | 85 | 03-05 | FD076 | FD093 |
| CR 85 R | | 85 | 06- | FD076 | FD093 |
| CR 125 ENDURO | | 125 | 91- | FD092 | FD093 |
| CR 125 R | | 125 | 92-93 | FD092 | FD093 |
| CR 125 R | | 125 | 94-94 | FD164 | FD093 |
| CR 125 R | | 125 | 95-97 | FD164 | FD093 |
| CR 125 R | | 125 | 98-01 | FD164 | FD093 |
| CR 250 ENDURO | | 250 | 91- | FD092 | FD093 |
| CR 250 R | | 250 | 90-91 | FD092 | FD093 |
| CR 250 R | | 250 | 92-94 | FD164 | FD093 |
| CR 250 R | | 250 | 95-96 | FD164 | FD093 |
| CR 250 R | | 250 | 97-01 | FD164 | FD093 |
| CRE 250 | | 250 | 90- | FD092 | FD093 |
| CRM 250 R | | 250 | 92- | FD092 | FD093 |
| XR 250 L, R | | 250 | 91-93 | FD164 | FD093 |
| XR 250 MOTARD | | 250 | 03- | FD164 | FD093 |
| XR 250 R | | 250 | 94-02 | FD164 | FD093 |
| XR 400 MOTARD (DF017SM) | | 400 | 05- | FD266 | FD093 |
| XR 400 R | | 400 | 96- | FD164 | FD093 |
| CR 500 ENDURO | | 500 | 91- | FD092 | FD093 |
| CR 500 R | | 500 | 90-92 | FD092 | FD093 |
| CR 500 R | | 500 | 92-94 | FD164 | FD093 |
| CR 500 R | | 500 | 95-00 | FD164 | FD093 |
| XR 600 R | | 600 | 91-92 | FD092 | FD093 |
| XR 600 R | | 600 | 93- | FD164 | FD093 |
| XR 650 R | | 650 | 00- | FD164 | FD093 |
| **HUSQVARNA** | | | | | |
| 125 WXE | | 125 | 07- | FD133 | FD093 |
| **KAWASAKI** | | | | | |
| KX 125 | | 125 | 95-02 | FD164 | FD093 |
| KX 125 | | 125 | 03-03 | FD164 | FD093 |
| KX 125 | | 125 | 04-05 | FD164 | FD093 |
| KX 125 | | 125 | 06- | FD164 | FD093 |
| D 250 TRACKER | | 250 | 03- | FD164 | FD093 |
| KLX 250 | | 250 | 09- | FD086 | FD093 |
| KLX 250 D TRACKER | | 250 | 00- | FD164 | FD093 |
| KLX 250 S | | 250 | 05-07 | FD164 | FD093 |
| KLX 250 SF | | 250 | 09- | FD086 | FD093 |
| KX 250 | | 250 | 95-02 | FD164 | FD093 |
| KX 250 | | 250 | 03-03 | FD164 | FD093 |
| KLX 300 R | | 300 | 96- | FD164 | FD093 |
| KLX 400 R | | 400 | 03- | FD164 | FD093 |
| KX 500 | | 500 | 95- | FD164 | FD093 |
| **RIEJU** | | | | | |
| MRX 250 | | 250 | 06- | FD164 | FD093 |
| MRX 450 | | 450 | 05- | FD164 | FD093 |
| **SCORPA** | | | | | |
| ENDURO 2.5i | | 250 | 06- | FD164 | FD093 |
| ENDURO 4.5i | | 450 | 06- | FD164 | FD093 |
| ENDURO 5.1i | | 510 | 06- | FD164 | FD093 |
| **SHERCO** | | | | | |
| 2.5 if | | 250 | 09- | FD138 | FD093 |
| 4.5 4T SM if | | 450 | 09- | FD262 | FD093 |
| 4.5 if | | 450 | 09- | FD138 | FD093 |
| 5.1 if | | 510 | 09- | FD138 | FD093 |
| **SUZUKI** | | | | | |
| RM 125 | | 125 | 96-98 | FD164 | FD093 |
| RM 125 | | 125 | 99-03 | FD164 | FD093 |
| DR 250 SB | | 250 | 03- | FD164 | FD093 |
| DR-Z 250 E | | 250 | 01- | FD164 | FD093 |
| RM 250 | | 250 | 96-98 | FD164 | FD093 |
| RM 250 | | 250 | 99-03 | FD164 | FD093 |
| RM 250 | | 250 | 04-05 | FD164 | FD093 |
| RM 250 | | 250 | 06- | FD164 | FD093 |
| DR-Z 400 E | | 400 | 00- | FD164 | FD093 |
| DR-Z 400 S | | 400 | 00- | FD164 | FD093 |
| DR-Z 400 S SUPER MOTARD | | 400 | 05- | FD164 | FD093 |
| **TM** | | | | | |
| JUNIOR 80 | | 80 | 05- | FD138 | FD093 |
| JUNIOR 85 | | 85 | 05- | FD138 | FD093 |
| JUNIOR 100 | | 100 | 05- | FD138 | FD093 |
| 400 4T E/CROSS | | 400 | 03- | FD138 | FD093 |
| 530 4T E/CROSS | | 530 | 03- | FD138 | FD093 |
| **YAMAHA** | | | | | |
| YZ 125, WR | | 125 | 98-00 | FD164 | FD093 |
| YZ 125, WR | | 125 | 01-02 | FD164 | FD093 |
| YZ 250 F, WR F 4T | | 250 | 00-00 | FD164 | FD093 |
| YZ 250 F, WR F 4T | | 250 | 01-02 | FD164 | FD093 |
| YZ 250, WR | | 250 | 99-00 | FD164 | FD093 |
| YZ 250, WR | | 250 | 01-02 | FD164 | FD093 |
| WR 400 F | | 400 | 98-98 | FD164 | FD093 |
| WR 400 F | | 400 | 99-99 | FD164 | FD093 |
| YZ 400 F | | 400 | 98-98 | FD164 | FD093 |
| YZ 400 F | | 400 | 99-99 | FD164 | FD093 |
| WR 426 F | | 425 | 00-01 | FD164 | FD093 |
| WR 426 F | | 425 | 02-02 | FD164 | FD093 |
| YZ 426 F | | 425 | 00-01 | FD164 | FD093 |
| YZ 426 F | | 425 | 02-02 | FD164 | FD093 |

## FD 094

mm 47,4 x 37,0 | 10,0 | A | B

mm 85,0 x 42,1 | 7,8 | A | B

G1054 | G1805 | G1396

| BRAND MARCA | MODEL MODELO | C.C. | YEAR | FRONT | REAR |
|---|---|---|---|---|---|
| **KAWASAKI** | | | | | |
| KX 80 | | 80 | 91-92 | FD094 | FD076 |
| **SUZUKI** | | | | | |
| RM 80 | | 80 | 90-95 | FD094 | FD094 |
| RM 80 | | 80 | 96-02 | FD177 | FD094 |
| RM 85 / L | | 85 | 03-04 | FD177 | FD094 |

## FD 095

mm 41,5 x 45,3 | 7,7 | A | A

G1054 | G1805 | G1396 | G1397

| BRAND MARCA | MODEL MODELO | C.C. | YEAR | FRONT | REAR |
|---|---|---|---|---|---|
| **CCM** | | | | | |
| C-XR 125 M | | 125 | 08- | FD073 | FD095 |
| C-XR 125 S | | 125 | 08- | FD073 | FD095 |
| C-XR 230 E | | 230 | 07- | FD073 | FD095 |
| C-XR 230 M | | 230 | 07- | FD073 | FD095 |
| C-XR 230 S | | 230 | 07- | FD073 | FD095 |
| **HONDA** | | | | | |
| CR 80 R | | 80 | 90-96 | FD095 | FD093 |
| **HUSQVARNA** | | | | | |
| 610 TE | | 610 | 92-94 | FD086 | FD095 |
| **KAWASAKI** | | | | | |
| KX 65 | | 65 | 00-04 | FD254 | FD095 |
| KX 65 | | 65 | 05- | FD254 | FD095 |
| KLX 125 | | 125 | 10- | FD086 | FD095 |
| KLX 140 L | | 140 | 08- | FD086 | FD095 |
| **KREIDLER** | | | | | |
| SUPERMOTO 250 DD | | 250 | 08- | FD086 | FD095 |
| **SUZUKI** | | | | | |
| RM 65 | | 65 | 03- | FD254 | FD095 |
| DR 125 S | | 125 | 98- | FD095 | MF151 |

## FD 097

mm 82,7 x 21,9 | 7,3 | A | A

G1054 | G1805

| BRAND MARCA | MODEL MODELO | C.C. | YEAR | FRONT | REAR |
|---|---|---|---|---|---|
| **JINCHENG** | | | | | |
| JC 150 Y | | 150 | 05- | FD097 | MF |
| **YAMAHA** | | | | | |
| YZ 80 | | 80 | 93-02 | FD097 | FD299 |

| | | | | |
|---|---|---|---|---|
| YZ 85 / LW | 85 | 03- | FD097 | FD299 |

## FD 102
mm 75,0 x 40,0 | 6,3 | A | A
G1054 | G1805

| BRAND MARCA | MODEL MODELO | C.C. | YEAR | FRONT | REAR |
|---|---|---|---|---|---|
| **BETA** | | | | | |
| TR 35 125 | | 125 | 91- | FD065 | FD102 |
| ZERO 125 | | 125 | 92- | FD065 | FD102 |
| 240 ST | | 240 | 92- | FD065 | FD102 |
| SYNT 260 | | 260 | 92-93 | FD065 | FD102 |

## FD 107
mm 69,7 x 46,0 | 8,5 | A | A
G1054 | G1370 | G1375 | G1003 | G1300

| BRAND MARCA | MODEL MODELO | C.C. | YEAR | FRONT | REAR |
|---|---|---|---|---|---|
| **GAS GAS** | | | | | |
| SM 125 | | 125 | 01-04 | FD107 | FD093 |
| SM 250 | | 250 | 01- | FD107 | FD093 |
| SM 400 | | 400 | 01- | FD107 | FD093 |

## FD 114
mm 62,0 x 40,6 | 9,5 | A | A
G1054 | G1805 | G1396

| BRAND MARCA | MODEL MODELO | C.C. | YEAR | FRONT | REAR |
|---|---|---|---|---|---|
| **CANNONDALE** | | | | | |
| XC 400 | | 400 | 01- | FD164 | FD114 |
| E 440 | | 440 | 01- | FD164 | FD114 |
| X 440 | | 440 | 01- | FD164 | FD114 |
| X 440 S | | 440 | 01- | FD164 | FD114 |
| **KAWASAKI** | | | | | |
| KX 80 | | 80 | 93-96 | FD091 | FD114 |
| KDX 200 SR | | 200 | 90- | FD086 | FD114 |
| KDX 220 | | 220 | 99- | FD164 | FD114 |
| KDX 250 R | | 250 | 92- | FD086 | FD114 |
| KLX 250 R | | 250 | 92- | FD086 | FD114 |
| KX 250 | | 250 | 94-94 | FD164 | FD114 |
| KX 500 | | 500 | 94-94 | FD164 | FD114 |
| KLX 650 R | | 650 | 93- | FD164 | FD114 |
| KLX 650 S | | 650 | 93- | FD164 | FD114 |
| **SUZUKI** | | | | | |
| DR 250 S | | 250 | 90-00 | FD086 | FD114 |
| RM 250 | | 250 | 93-95 | FD086 | FD114 |
| RMX 250 | | 250 | 95- | FD086 | FD114 |
| RMX S | | 250 | 92-94 | FD086 | FD114 |
| DR 350 S | | 350 | 90-92 | FD086 | FD114 |
| DR 350 S, SH | | 350 | 93-93 | FD086 | FD114 |
| DR 350 SE | | 350 | 94- | FD086 | FD114 |
| DR 650 | | 650 | 96- | FD164 | FD114 |
| **YAMAHA** | | | | | |
| WR 125 | | 125 | 91- | FD086 | FD114 |
| YZ 125, WR | | 125 | 90-91 | FD086 | FD114 |
| YZ 125, WR | | 125 | 92-97 | FD086 | FD114 |
| WR 200 R | | 200 | 93- | FD086 | FD114 |
| TT 250 R | | 250 | 93- | FD086 | FD114 |
| WR 250 | | 250 | 91- | FD086 | FD114 |
| YZ 250, W, RALLY | | 250 | 90-91 | FD086 | FD114 |
| YZ 250, WR | | 250 | 92-98 | FD086 | FD114 |
| YZ 360, RALLY | | 360 | 90- | FD086 | FD114 |
| WR 500 | | 500 | 92- | FD086 | FD114 |
| TT 600 | | 600 | 93-94 | FD086 | FD114 |

## FD 122
mm 36,0 x 45,0 | 6,0 | A | A
G1054 | G1805

| BRAND MARCA | MODEL MODELO | C.C. | YEAR | FRONT | REAR |
|---|---|---|---|---|---|
| **MONTESA** | | | | | |
| COTA 310 | | 310 | 90- | FD122 | FD123 |
| COTA 311 EVASION | | 311 | 91- | FD122 | FD123 |
| COTA 314 R | | 314 | 94- | FD122 | FD123 |
| COTA 315 R | | 315 | 99- | FD122 | FD123 |

## FD 123
mm 39,8 x 56,3 | 7,0 | A | A
G1054 | G1805

| BRAND MARCA | MODEL MODELO | C.C. | YEAR | FRONT | REAR |
|---|---|---|---|---|---|
| **MONTESA** | | | | | |
| COTA 310 | | 310 | 90- | FD122 | FD123 |
| COTA 311 EVASION | | 311 | 91- | FD122 | FD123 |
| COTA 314 R | | 314 | 94- | FD122 | FD123 |
| COTA 315 R | | 315 | 99- | FD122 | FD123 |

## FD 128
mm 79,3 x 46,2 | 9,0 | A | A
G1054 | G1805

| BRAND MARCA | MODEL MODELO | C.C. | YEAR | FRONT | REAR |
|---|---|---|---|---|---|
| **FANTIC** | | | | | |
| CABALLERO | | 125 | 97- | FD128 | FD135 |
| **KTM** | | | | | |
| 125 ENDURO | | 125 | 92-92 | FD128 | FD075 |
| 125 GS | | 125 | 91-92 | FD128 | FD075 |
| 250 ENDURO | | 250 | 92-92 | FD128 | FD075 |
| 250 GS | | 250 | 91-92 | FD128 | FD075 |
| 300 ENDURO | | 300 | 92-92 | FD128 | FD075 |
| 300 GS | | 300 | 91- | FD128 | FD075 |
| 600 4T GARA | | 600 | 91-92 | FD128 | FD075 |

## FD 133
mm 76,8 x 41,8 | 7,4 | A | A
G1054 | G1805 | G1380

| BRAND MARCA | MODEL MODELO | C.C. | YEAR | FRONT | REAR |
|---|---|---|---|---|---|
| **AJP** | | | | | |
| PR 4 125 ENDURO | | 125 | 05-09 | FD133 | FD223 |
| PR 4 125 SM | | 125 | 05-09 | FD133 | FD223 |
| ENDURO 250 | | 250 | 05- | FD133 | FD223 |
| **CH RACING** | | | | | |
| WSM 125 MOTARD | | 125 | 05- | FD133 | FD065 |
| **HUSQVARNA** | | | | | |
| 125 WXE | | 125 | 07- | FD133 | FD093 |
| **KTM** | | | | | |
| EXC 50 | | 50 | 99- | FD133 | FD065 |
| **SHERCO** | | | | | |
| 1.25 | | 125 | 99-01 | FD133 | FD065 |

## FD 135
mm 56,3 x 34,7 | 10,5 | A | B
mm 85,0 x 42,1 | 7,8 | A | B
G1054

| BRAND MARCA | MODEL MODELO | C.C. | YEAR | FRONT | REAR |
|---|---|---|---|---|---|
| **APRILIA** | | | | | |
| MX 125 | | 125 | 04- | FD138 | FD135 |
| SX 125 | | 125 | 08- | FD138 | FD135 |
| **CAGIVA** | | | | | |
| W12 350 | | 350 | 93- | FD089 | FD135 |
| **FANTIC** | | | | | |
| CABALLERO | | 125 | 97- | FD128 | FD135 |

## FD 136
mm 61,0 x 27,3 | 7,3 | A | A
G1054

| BRAND MARCA | MODEL MODELO | C.C. | YEAR | FRONT | REAR |
|---|---|---|---|---|---|
| **JINCHENG** | | | | | |
| JC 70 Y | | 70 | 05- | FD136 | MF |

## FD 138
mm 94,0 x 36,7 | 7,6 | A | A[1]
G1054 | G1805 | G1370 | G1380 | G1396

| BRAND MARCA | MODEL MODELO | C.C. | YEAR | FRONT | REAR |
|---|---|---|---|---|---|
| **ALFER** | | | | | |
| 125 VR 4T | | 125 | 03- | FD138 | FD165 |
| 125 VR 4T NO LIMITS | | 125 | 03- | FD138 | FD165 |
| 250 AR | | 250 | 93- | FD138 | FD075 |
| 250 VR | | 250 | 94-94 | FD138 | FD075 |
| 250 VR ENDURO | | 250 | 95- | FD138 | FD165 |
| 250 VR MOTOCROSS | | 250 | 95- | FD138 | FD165 |
| NO LIMITS | | 250 | 95- | FD138 | FD165 |
| **APRILIA** | | | | | |
| MX 125 | | 125 | 04- | FD138 | FD135 |
| SX 125 | | 125 | 08- | FD138 | FD135 |
| **ATK** | | | | | |
| TODOS MODELOS | | | 97- | FD138 | FD165 |
| **BENELLI** | | | | | |
| BX 449 | | 449 | 07- | FD138 | FD291 |
| 510 ENDURO | | 510 | 08- | FD138 | FD165 |
| **BMW** | | | | | |
| G 450 X | | 450 | 08- | FD138 | FD291 |
| SPORT ENDURO 450 | | 450 | 08- | FD138 | FD291 |
| **BREMBO OFF ROAD** | | | | | |
| 122A99021 | | | - | FD138 | |
| XQ21361 | | | - | FD138 | |
| **CCM** | | | | | |
| 404 DS SUPER MOTARD | | 404 | 03- | FD138 | FD165 |
| **FACTORY** | | | | | |
| YR 250 | | 250 | 98- | FD138 | FD165 |
| **GAS GAS** | | | | | |
| ENDUCROSS 80 | | 80 | 94- | FD138 | FD074 |
| EC 125 | | 125 | 94-00 | FD138 | FD074 |
| ENDURO TT 125 | | 125 | 93- | FD138 | FD075 |
| MC 125 | | 125 | 94-00 | FD138 | FD074 |
| TT 125 | | 125 | 95- | FD138 | FD165 |
| EC 200 | | 200 | 99-00 | FD138 | FD165 |
| EC 250 | | 250 | 95-98 | FD138 | FD075 |


For other models years previous to 1990 visit **www.galferonline.es** · Para otros modelos anteriores al año 1990 visitar **www.galferonline.es**
For consult TÜV (ABE) type approvals visit **www.galfermoto.com --> DOWNLOAD --> TÜV CERTIFICATIONS** · Para consultar las homologaciones TÜV (ABE) visitar **www.galfermoto.com --> DESCARGAS --> CERTIFICACIONES TÜV**

| | | | | |
|---|---|---|---|---|
| EC 250 | 250 | 99-00 | FD138 | FD165 |
| FSE 250 4T | 250 | 99- | FD138 | FD165 |
| MC 250 | 250 | 95-98 | FD138 | FD075 |
| MC 250 | 250 | 99-00 | FD138 | FD165 |
| TT 250 | 250 | 95- | FD138 | FD165 |
| EC 300 | 300 | 99-00 | FD138 | FD165 |
| EC 400 FSE | 400 | 99-00 | FD138 | FD165 |
| **HUSABERG** | | | | |
| 125 TE | 125 | 11- | FD138 | FD291 |
| 250 FE | 250 | 13- | FD138 | FD291 |
| 250 TE | 250 | 11- | FD138 | FD291 |
| 300 TE | 300 | 11- | FD138 | FD291 |
| 350 FC | 350 | 95-99 | FD138 | FD165 |
| 350 FE | 350 | 95-99 | FD138 | FD165 |
| 350 FE | 350 | 13- | FD138 | FD291 |
| 390 FE | 390 | 10- | FD138 | FD291 |
| 400 FE | 400 | 00- | FD138 | FD165 |
| 450 FC/FE | 450 | 04- | FD138 | FD165 |
| 450 FE | 450 | 12- | FD138 | FD291 |
| 450 FX | 450 | 10- | FD138 | FD291 |
| 500 CROSS | 500 | 93-93 | FD138 | FD075 |
| 501 FC | 501 | 95-99 | FD138 | FD165 |
| 501 FE | 501 | 95-99 | FD138 | FD165 |
| 501 FE | 501 | 13- | FD138 | FD291 |
| 550 FC/FE | 550 | 04- | FD138 | FD165 |
| 570 FE | 570 | 09- | FD138 | FD291 |
| 600 FC | 600 | 95-99 | FD138 | FD165 |
| 600 FE | 600 | 95-99 | FD138 | FD165 |
| 650 FC/FE | 650 | 04- | FD138 | FD165 |
| **HUSQVARNA** | | | | |
| 125 CR | 125 | 94-99 | FD138 | FD165 |
| 125 CR | 125 | 00-03 | FD138 | FD165 |
| 125 CR | 125 | 04-04 | FD138 | FD291 |
| 125 CR | 125 | 05- | FD138 | FD291 |
| 125 SM S | 125 | 00- | FD138 | FD165 |
| 125 SM S 4T | 125 | 11- | FD138 | FD165 |
| 125 TC | 125 | 14- | FD138 | FD291 |
| 125 TE | 125 | 14- | FD138 | FD291 |
| 125 TE 4T | 125 | 11-13 | FD138 | FD165 |
| 125 WR | 125 | 94-99 | FD138 | FD165 |
| 125 WR | 125 | 00-05 | FD138 | FD165 |
| 125 WR | 125 | 06- | FD138 | FD291 |
| 125 WRE | 125 | 94-99 | FD138 | FD165 |
| 125 WRE | 125 | 00- | FD138 | FD165 |
| 250 CR | 250 | 94-99 | FD138 | FD165 |
| 250 CR | 250 | 00-03 | FD138 | FD165 |
| 250 CR | 250 | 04-04 | FD138 | FD291 |
| 250 CR | 250 | 05- | FD138 | FD291 |
| 250 FC | 250 | 14- | FD138 | FD291 |
| 250 FE | 250 | 14- | FD138 | FD291 |
| 250 TC | 250 | 04-04 | FD138 | FD291 |
| 250 TC | 250 | 05-13 | FD138 | FD291 |
| 250 TC | 250 | 14- | FD138 | FD291 |
| 250 TE | 250 | 05- | FD138 | FD291 |
| 250 TE | 250 | 14- | FD138 | FD291 |
| 250 TE R | 250 | 13-13 | FD138 | FD291 |
| 250 WR | 250 | 94-99 | FD138 | FD165 |
| 250 WR | 250 | 00- | FD138 | FD165 |
| 300 TE | 300 | 14- | FD138 | FD291 |
| 300 WR | 300 | 09- | FD138 | FD291 |
| 310 TE | 310 | 09- | FD138 | FD291 |
| 310 TE R | 310 | 13- | FD138 | FD291 |
| 350 FC | 350 | 14- | FD138 | FD291 |
| 350 FE | 350 | 14- | FD138 | FD291 |
| 350 TE | 350 | 94-99 | FD138 | FD165 |
| 360 CR | 360 | 94-99 | FD138 | FD165 |
| 360 WR | 360 | 94-99 | FD138 | FD165 |
| 360 WR | 360 | 00- | FD138 | FD165 |
| TE 410 | 410 | 94-99 | FD138 | FD165 |
| TE 410/E | 410 | 00- | FD138 | FD165 |
| 449 TE | 449 | 11- | FD138 | FD291 |
| 450 FC | 450 | 14- | FD138 | FD291 |
| 450 FE | 450 | 14- | FD138 | FD291 |
| 450 TC | 450 | 05- | FD138 | FD291 |
| 450 TE | 450 | 05- | FD138 | FD291 |
| TC 449 | 450 | 11- | FD138 | FD291 |
| TE 449 | 450 | 11- | FD138 | FD291 |
| 501 FE | 501 | 14- | FD138 | FD291 |

| | | | | |
|---|---|---|---|---|
| 510 TC | 510 | 04-04 | FD138 | FD291 |
| 510 TC | 510 | 05- | FD138 | FD291 |
| 510 TE | 510 | 95-99 | FD138 | FD165 |
| 510 TE | 510 | 00-04 | FD138 | FD165 |
| 510 TE | 510 | 05- | FD138 | FD291 |
| TE 511 | 511 | 11- | FD138 | FD291 |
| 570 TE | 570 | 00- | FD138 | FD165 |
| 610 TC | 610 | 94-99 | FD138 | FD165 |
| 610 TC | 610 | 00- | FD138 | FD165 |
| 610 TE | 610 | 94-99 | FD138 | FD165 |
| 610 TE | 610 | 00- | FD138 | FD165 |
| 630 TE | 630 | 10- | FD138 | FD165 |
| **KTM** | | | | |
| 125 ENDURO | 125 | 93- | FD138 | FD075 |
| 125 EXC | 125 | 04- | FD138 | FD291 |
| 125 EXC/EGS/SX | 125 | 95-03 | FD138 | FD165 |
| 125 GS | 125 | 93-93 | FD138 | FD075 |
| 125 GS | 125 | 94-94 | FD138 | FD165 |
| 125 MX | 125 | 92-95 | FD138 | FD075 |
| 125 SX | 125 | 93-93 | FD138 | FD075 |
| 125 SX | 125 | 94-03 | FD138 | FD165 |
| 125 SX | 125 | 04- | FD138 | FD291 |
| 144 SX | 144 | 08- | FD138 | FD291 |
| 150 XC | 150 | 10- | FD138 | FD291 |
| 200 EGS | 200 | 99-02 | FD138 | FD165 |
| 200 EXC | 200 | 98-03 | FD138 | FD165 |
| 200 EXC | 200 | 04- | FD138 | FD291 |
| 200 SX | 200 | 03-03 | FD138 | FD165 |
| 200 SX | 200 | 04- | FD138 | FD291 |
| 250 F | 250 | 06- | FD138 | FD291 |
| 250 EGS | 250 | 99- | FD138 | FD165 |
| 250 ENDURO | 250 | 93- | FD138 | FD075 |
| 250 EXC / 4T | 250 | 03-03 | FD138 | FD165 |
| 250 EXC / 4T | 250 | 04- | FD138 | FD291 |
| 250 EXC F | 250 | 15- | FD138 | FD291 |
| 250 EXC/EGS/SX | 250 | 94-02 | FD138 | FD165 |
| 250 GS | 250 | 93-93 | FD138 | FD075 |
| 250 GS | 250 | 94- | FD138 | FD165 |
| 250 MX | 250 | 92-92 | FD138 | FD075 |
| 250 MX | 250 | 03- | FD138 | FD165 |
| 250 SX | 250 | 94-02 | FD138 | FD165 |
| 250 SX | 250 | 03- | FD138 | FD291 |
| 250 SX F | 250 | 15- | FD138 | FD291 |
| 250 SX, EGS, EXC | 250 | 93-93 | FD138 | FD075 |
| 250 XC / F / W | 250 | 06- | FD138 | FD291 |
| 300 ENDURO | 300 | 93- | FD138 | FD075 |
| 300 EXC | 300 | 03-03 | FD138 | FD165 |
| 300 EXC | 300 | 04- | FD138 | FD291 |
| 300 EXC - E | 300 | 08- | FD138 | FD291 |
| 300 MXC | 300 | 04- | FD138 | FD291 |
| 300 SX, EGS, EXC | 300 | 93-03 | FD138 | FD075 |
| 300 XC / W | 300 | 06- | FD138 | FD291 |
| 350 ECX F | 350 | 12- | FD138 | FD291 |
| 350 LC4 EXC | 350 | 94- | FD138 | FD165 |
| 350 MX | 350 | 92- | FD138 | FD075 |
| 350 SX F | 350 | 11- | FD138 | FD291 |
| 350 SX FACTORY | 350 | 10- | FD138 | FD291 |
| 350 XC F | 350 | 11- | FD138 | FD291 |
| 400 EXC | 400 | 04- | FD138 | FD291 |
| 400 LC4 EGS | 400 | 96- | FD138 | FD165 |
| 400 LC4 EGS | 400 | 94-95 | FD138 | FD165 |
| 440 SX | 440 | 94- | FD138 | FD165 |
| 450 EXC | 450 | 03-03 | FD138 | FD165 |
| 450 EXC | 450 | 04- | FD138 | FD291 |
| 450 EXC - R | 450 | 08- | FD138 | FD291 |
| 450 MXC | 450 | 04- | FD138 | FD291 |
| 450 RALLY | 450 | 11- | FD138 | FD291 |
| 450 SX | 450 | 03- | FD138 | FD291 |
| 450 SXF | 450 | 07- | FD138 | FD291 |
| 450 XC | 450 | 06- | FD138 | FD291 |
| 450 XC SIX DAYS | 450 | 10- | FD138 | FD291 |
| 500 EXC | 500 | 14- | FD138 | FD291 |
| 500 MX | 500 | 92- | FD138 | FD075 |
| 500 SX | 500 | 93- | FD138 | FD075 |
| 505 SX | 505 | 07- | FD138 | FD291 |
| 525 EXC | 525 | 03-03 | FD138 | FD165 |
| 525 EXC | 525 | 04- | FD138 | FD291 |
| 525 MXC | 525 | 04- | FD138 | FD291 |

| | | | | |
|---|---|---|---|---|
| 525 SX | 525 | 03-03 | FD138 | FD165 |
| 525 SX | 525 | 04- | FD138 | FD291 |
| 530 EXC - R | 530 | 08- | FD138 | FD291 |
| 530 XC / W | 530 | 08- | FD138 | FD291 |
| 530 XC SIX DAYS | 530 | 10- | FD138 | FD291 |
| 540 SXC | 540 | 99- | FD138 | FD165 |
| 550 MG,XC | 550 | 94- | FD138 | FD165 |
| 600 4T GS | 600 | 93-93 | FD138 | FD075 |
| 600 4T GS | 600 | 94- | FD138 | FD165 |
| 620 LC4 EXC, EGS, SX | 620 | 94- | FD138 | FD165 |
| 625 EXC | 625 | 03- | FD138 | FD165 |
| 640 LC4 ENDURO | 640 | 99- | FD138 | FD165 |
| **OSSA** | | | | |
| ENDURO 300i | 300 | 12- | FD138 | FD291 |
| **RIEJU** | | | | |
| MARATHON 250 | 250 | 09- | FD138 | FD291 |
| MARATHON 450 | 450 | 09- | FD138 | FD291 |
| **SHERCO** | | | | |
| 2.5 if | 250 | 09- | FD138 | FD093 |
| 250 SE | 250 | 15- | FD138 | FD286 |
| 250 SE-R | 250 | 15- | FD138 | FD286 |
| 250 SEF | 250 | 15- | FD138 | FD286 |
| 250 SEF-R | 250 | 15- | FD138 | FD286 |
| SE 2.5i | 250 | 12- | FD138 | FD291 |
| SX 2.5 F | 250 | 10- | FD138 | FD286 |
| 300 SE | 300 | 15- | FD138 | FD286 |
| 300 SE-R | 300 | 15- | FD138 | FD286 |
| 300 SEF | 300 | 15- | FD138 | FD286 |
| 300 SEF-R | 300 | 15- | FD138 | FD286 |
| SE 3.0 | 300 | 10-11 | FD138 | FD286 |
| SE 3.0i | 300 | 12- | FD138 | FD291 |
| 4.5 4T | 450 | 04-08 | FD138 | FD286 |
| 4.5 if | 450 | 09- | FD138 | FD093 |
| 450 SEF | 450 | 15- | FD138 | FD286 |
| 450 SEF-R | 450 | 15- | FD138 | FD286 |
| SE 4.5i | 450 | 12- | FD138 | FD291 |
| 5.1 4T | 510 | 06-08 | FD138 | FD286 |
| 5.1 if | 510 | 09- | FD138 | FD093 |
| SE 5.1i | 510 | 12- | FD138 | FD291 |
| **TM** | | | | |
| 80 GS, MC | 80 | 93- | FD138 | FD165 |
| JUNIOR 80 | 80 | 05- | FD138 | FD093 |
| JUNIOR 85 | 85 | 05- | FD138 | FD093 |
| MX 85 | 85 | 01-04 | FD138 | FD165 |
| MX 85 | 85 | 05- | FD138 | FD286 |
| JUNIOR 100 | 100 | 05- | FD138 | FD093 |
| 125 CROSS | 125 | 00- | FD138 | FD165 |
| 125 ENDURO/MX | 125 | 00- | FD138 | FD165 |
| 125 GS, MC | 125 | 93- | FD138 | FD165 |
| EN 125 | 125 | 04-14 | FD138 | FD286 |
| MX 125 | 125 | 05-14 | FD138 | FD286 |
| EN144 | 144 | 14- | FD138 | FD286 |
| MX 144 | 144 | 15- | FD138 | FD286 |
| 250 ENDURO 4T | 250 | 00- | FD138 | FD165 |
| EN 250 | 250 | 04-14 | FD138 | FD286 |
| EN 250 F | 250 | 04-14 | FD138 | FD286 |
| MX 250 | 250 | 05-14 | FD138 | FD286 |
| MX 250 F | 250 | 05-14 | FD138 | FD286 |
| 300 ENDURO 4T | 300 | 01- | FD138 | FD165 |
| EN 300 | 300 | 14- | FD138 | FD286 |
| MX 300 | 300 | 14- | FD138 | FD286 |
| 400 4T E/CROSS | 400 | 00-02 | FD138 | FD165 |
| 400 4T E/CROSS | 400 | 03- | FD138 | FD093 |
| EN 450 F | 450 | 04-14 | FD138 | FD286 |
| MX 450 F | 450 | 05-14 | FD138 | FD286 |
| 530 4T E/CROSS | 530 | 03- | FD138 | FD093 |
| EN 530 F | 530 | 04-14 | FD138 | FD286 |
| MX 530 F | 530 | 05-14 | FD138 | FD286 |
| **VERTEMATI** | | | | |
| 492 ENDURO | 500 | 99-00 | FD138 | FD165 |
| 495 CROSS | 500 | 99-00 | FD138 | FD165 |
| C500 | 500 | 01-01 | FD138 | FD165 |
| E 510 | 500 | 02- | FD138 | FD165 |
| **VOR** | | | | |
| MX 350 | 350 | 01- | FD138 | FD165 |
| EN 400 | 400 | 00- | FD138 | FD165 |
| EN 450 | 450 | 01- | FD138 | FD165 |
| EN 503 | 503 | 00- | FD138 | FD165 |

| | | | | |
|---|---|---|---|---|
| MX 503 | 503 | 00- | FD138 | FD165 |
| EN 530 | 530 | 01- | FD138 | FD165 |
| **YAMAHA** | | | | |
| TT 600 | 600 | 95-97 | FD138 | FD165 |
| TT 600 R | 600 | 99-02 | FD138 | FD165 |
| TT 600 RE | 600 | 03- | FD138 | FD165 |

## FD 145

| | mm | | |
|---|---|---|---|
| | 77,4 x 42,3 | 9,2 | A / B |
| | 98,8 x 42,3 | 9,2 | A / B |

G1054 | G1380

| BRAND MARCA | MODEL MODELO | C.C. | YEAR | FRONT | REAR |
|---|---|---|---|---|---|
| **CCM** | | | | | |
| SM 125 | | 125 | 08- | FD187 | FD145 |

## FD 151

| | mm | | |
|---|---|---|---|
| | 55,5 x 46,2 | 7,0 | A / A |

G1054 | G1805

| BRAND MARCA | MODEL MODELO | C.C. | YEAR | FRONT | REAR |
|---|---|---|---|---|---|
| **BETA** | | | | | |
| SYNT 125 | | 125 | 94- | FD065 | FD151 |
| TECHNO 250 | | 250 | 94- | FD065 | FD151 |
| SYNT 260 | | 260 | 94- | FD065 | FD151 |

## FD 159

| | mm | | |
|---|---|---|---|
| | 55,6 x 47,3 | 6,0 | A / A |

G1054 | G1805

| BRAND MARCA | MODEL MODELO | C.C. | YEAR | FRONT | REAR |
|---|---|---|---|---|---|
| **BETA** | | | | | |
| ZERO 93 GARA | | 260 | 93-97 | FD065 | FD159 |

## FD 162

| | mm | | |
|---|---|---|---|
| | 76,8 x 41,8 | 7,5 | A / B |
| | 94,5 x 42,0 | 7,5 | A / B |

G1054 | G1380

| BRAND MARCA | MODEL MODELO | C.C. | YEAR | FRONT | REAR |
|---|---|---|---|---|---|
| **AJP** | | | | | |
| PR 4 125 ENDURO / PRO | | 125 | 10- | FD162 | FD252 |
| PR 4 125 SM / PRO | | 125 | 10- | FD162 | FD252 |
| MX 200 | | 200 | 09- | FD162 | FD065 |
| PR 4 200 ENDURO / PRO | | 200 | 10- | FD162 | FD252 |
| PR 4 200 SM / PRO | | 200 | 10- | FD162 | FD252 |
| **BETA** | | | | | |
| RR 125 4T SM | | 125 | 06- | FD162 | FD456 |
| RR MOTARD | | 125 | 08- | FD162 | FD456 |
| 200 ALP | | 200 | 08- | FD162 | FD456 |
| **FACTORY** | | | | | |
| YR 125 CB | | 125 | 04- | FD162 | FD075 |
| **FANTIC** | | | | | |
| SUPERSEI MOTARD | | 125 | 07- | FD162 | FD075 |
| **GAS GAS** | | | | | |
| ENDUCAMP 125 4T | | 125 | 05- | FD162 | FD093 |
| ENDUCAMP 400 4T | | 400 | 05- | FD162 | FD093 |
| **HM** | | | | | |
| DERAPAGE RR | | 50 | 09- | FD162 | FD278 |
| CRM F 125 X | | 125 | 08- | FD162 | FD278 |
| **MONKEY BIKE** | | | | | |
| MB 200 SM | | 200 | 06- | FD162 | FD065 |
| MB 200 TR | | 200 | 06- | FD162 | FD065 |
| **MOTORHISPANIA** | | | | | |
| DUNA DUAL SPORT | | 125 | 09- | FD162 | FD065 |
| MH 10 PRO 125 LC | | 125 | 12- | FD162 | FD075 |
| **SHERCO** | | | | | |
| SE 1.25 F | | 125 | 10- | FD162 | FD270 |

## FD 164

| | mm | | |
|---|---|---|---|
| | 94,2 x 33,7 | 7,5 | A / A[1] |

G1054 | G1805 | G1396

| BRAND MARCA | MODEL MODELO | C.C. | YEAR | FRONT | REAR |
|---|---|---|---|---|---|
| **AJP** | | | | | |
| PR 5 ENDURO 250 | | 250 | 09-10 | FD164 | FD093 |
| PR 5 SUPERMOTO 250 | | 250 | 09-10 | FD164 | FD093 |
| **APRILIA** | | | | | |
| MXV 450 | | 450 | 07- | FD164 | FD286 |
| RXV 450 | | 450 | 06- | FD164 | FD286 |
| RXV 550 | | 550 | 07- | FD164 | FD286 |
| **BETA** | | | | | |
| 250 RR 2T ENDURO | | 250 | 12- | FD164 | FD456 |
| 250 RR 4T | | 250 | 05- | FD164 | FD456 |
| 300 RR 2T ENDURO | | 300 | 13- | FD164 | FD456 |
| XTRAINER | | 300 | 15- | FD164 | FD456 |
| 350 RR 4T | | 350 | 11-12 | FD164 | FD456 |
| 350 RR 4T ENDURO | | 350 | 13- | FD164 | FD456 |
| 350 RR efi | | 350 | 15- | FD164 | FD456 |
| 390 RR 4T | | 390 | 15- | FD164 | FD456 |
| 400 RR 4T | | 400 | 05-12 | FD164 | FD456 |
| 400 RR 4T ENDURO | | 400 | 13- | FD164 | FD456 |
| 430 RR 4T | | 430 | 15- | FD164 | FD456 |
| 450 RR 4T | | 450 | 05-12 | FD164 | FD456 |
| 450 RR 4T ENDURO | | 450 | 13- | FD164 | FD456 |
| 480 RR 4T | | 480 | 15- | FD164 | FD456 |
| 498 RR 4T | | 498 | 12-12 | FD164 | FD456 |
| 498 RR 4T ENDURO | | 498 | 13- | FD164 | FD456 |
| 525 RR 4T | | 525 | 05- | FD164 | FD456 |
| **CANNONDALE** | | | | | |
| XC 400 | | 400 | 01- | FD164 | FD114 |
| E 440 | | 440 | 01- | FD164 | FD114 |
| X 440 | | 440 | 01- | FD164 | FD114 |
| X 440 S | | 440 | 01- | FD164 | FD114 |
| **GAS GAS** | | | | | |
| EC 125 | | 125 | 01-14 | FD164 | FD093 |
| EC 125 | | 125 | 15- | FD164 | FD286 |
| EC 125 SIX DAYS | | 125 | 11- | FD164 | FD286 |
| MC 125 | | 125 | 01- | FD164 | FD093 |
| EC 200 | | 200 | 01- | FD164 | FD093 |
| EC 200 SIX DAYS | | 200 | 11- | FD164 | FD286 |
| EC 250 | | 250 | 01- | FD164 | FD093 |
| EC 250 E | | 250 | 11- | FD164 | FD286 |
| EC 250 F | | 250 | 10- | FD164 | FD286 |
| EC 250 FSE | | 250 | 01- | FD164 | FD093 |
| EC 250 RACING | | 250 | 09- | FD164 | FD093 |
| EC 250 SIX DAYS | | 250 | 11- | FD164 | FD286 |
| EC 250 YR | | 250 | 12- | FD164 | FD286 |
| MC 250 | | 250 | 01- | FD164 | FD093 |
| EC 300 | | 300 | 01- | FD164 | FD093 |
| EC 300 E | | 300 | 11- | FD164 | FD286 |
| EC 300 F | | 300 | 15- | FD164 | FD286 |
| EC 300 RACING | | 300 | 09- | FD164 | FD286 |
| EC 300 SIX DAYS | | 300 | 11- | FD164 | FD286 |
| EC 400 FSE | | 400 | 01- | FD164 | FD093 |
| PAMPERA 400 | | 400 | 06- | FD164 | FD093 |
| EC 450 F | | 450 | 15- | FD164 | FD286 |
| EC 450 FSE | | 450 | 03- | FD164 | FD093 |
| EC 450 RAID | | 450 | 15- | FD164 | FD286 |
| **HM** | | | | | |
| CR 125 MOTARD | | 125 | 03-06 | FD164 | FD278 |
| CRE 125 R | | 125 | 03- | FD164 | FD278 |
| EASY 230 F ENDURO | | 230 | 04- | FD164 | FD278 |
| EASY 230 F MOTARD | | 230 | 04- | FD164 | FD278 |
| EASY 230 F TRAIL | | 230 | 04- | FD164 | MF |
| EASY 230 F TRAIL ID | | 230 | 04- | FD164 | FD278 |
| CR 250 MOTARD | | 250 | 03- | FD164 | FD278 |
| CRE 250 F | | 250 | 03- | FD164 | FD278 |
| CRE 250 R | | 250 | 03- | FD164 | FD278 |
| CRE 250 X | | 250 | 09- | FD164 | FD278 |
| CRF 250 MOTARD | | 250 | 03-06 | FD164 | FD278 |
| CRF 250 R | | 250 | 09- | FD164 | FD278 |
| CRE 300 X | | 300 | 09- | FD164 | FD278 |
| CRE 450 F | | 450 | 03- | FD164 | FD278 |
| CRE 450 R | | 450 | 09- | FD164 | FD278 |
| CRE 450 X | | 450 | 09- | FD164 | FD278 |
| CRF 450 MOTARD | | 450 | 03- | FD164 | FD278 |
| CRF 450 R | | 450 | 09- | FD164 | FD278 |
| CRE F 490 X | | 490 | 07- | FD164 | FD278 |
| CRE 500 X | | 500 | 09- | FD164 | FD278 |
| **HONDA** | | | | | |
| CR 125 R | | 125 | 94-94 | FD164 | FD093 |
| CR 125 R | | 125 | 95-97 | FD164 | FD093 |
| CR 125 R | | 125 | 98-01 | FD164 | FD093 |
| CR 125 R | | 125 | 02-04 | FD164 | FD278 |
| CR 125 R | | 125 | 05-07 | FD164 | FD278 |
| CRF 150 F | | 150 | 03-06 | FD164 | MF003 |
| CRF 230 F | | 230 | 04- | FD164 | MF003 |
| CRF 230 L | | 230 | 08- | FD164 | FD278 |
| CRF 230 M | | 230 | 09- | FD164 | FD278 |
| CR 250 R | | 250 | 92-94 | FD164 | FD093 |
| CR 250 R | | 250 | 95-96 | FD164 | FD093 |
| CR 250 R | | 250 | 97-01 | FD164 | FD093 |
| CR 250 R | | 250 | 02-04 | FD164 | FD278 |
| CR 250 R | | 250 | 05-07 | FD164 | FD278 |
| CRF 250 R | | 250 | 04-07 | FD164 | FD278 |
| CRF 250 R | | 250 | 08-14 | FD164 | FD278 |
| CRF 250 R | | 250 | 15- | FD164 | FD278 |
| CRF 250 X | | 250 | 04- | FD164 | FD278 |
| CRF 250 XR LD | | 250 | 13- | FD164 | FD278 |
| XR 250 L, R | | 250 | 91-93 | FD164 | FD093 |
| XR 250 MOTARD | | 250 | 03- | FD164 | FD093 |
| XR 250 R | | 250 | 94-02 | FD164 | FD093 |
| XR 250 R | | 250 | 03- | FD164 | FD278 |
| XR 400 R | | 400 | 96- | FD164 | FD093 |
| CRF 450 F/R | | 450 | 01-03 | FD164 | FD278 |
| CRF 450 F/R | | 450 | 04-07 | FD164 | FD278 |
| CRF 450 F/R | | 450 | 08-14 | FD164 | FD278 |
| CRF 450 R | | 450 | 15- | FD164 | FD278 |
| CRF 450 RALLY | | 450 | 13- | FD164 | FD278 |
| CRF 450 X | | 450 | 04- | FD164 | FD278 |
| CRF 450 XR LD | | 450 | 13- | FD164 | FD278 |
| CR 500 R | | 500 | 92-94 | FD164 | FD093 |
| CR 500 R | | 500 | 95-00 | FD164 | FD093 |
| XR 600 R | | 600 | 93- | FD164 | FD093 |
| XR 650 R | | 650 | 00- | FD164 | FD093 |
| **KAWASAKI** | | | | | |
| KL 125 ENDURO | | 125 | 03- | FD164 | FD286 |
| KX 125 | | 125 | 95-02 | FD164 | FD093 |
| KX 125 | | 125 | 03-03 | FD164 | FD093 |
| KX 125 | | 125 | 04-05 | FD164 | FD093 |
| KX 125 | | 125 | 06- | FD164 | FD093 |
| KDX 220 | | 220 | 99- | FD164 | FD114 |
| D 250 TRACKER | | 250 | 03- | FD164 | FD093 |
| KLX 250 D TRACKER | | 250 | 00- | FD164 | FD093 |
| KLX 250 S | | 250 | 05-07 | FD164 | FD093 |
| KLX 250 S | | 250 | 08- | FD164 | FD286 |
| KX 250 | | 250 | 94-94 | FD164 | FD114 |
| KX 250 | | 250 | 95-02 | FD164 | FD093 |
| KX 250 | | 250 | 03-03 | FD164 | FD093 |
| KX 250 | | 250 | 04-05 | FD164 | FD286 |
| KX 250 | | 250 | 06- | FD164 | FD286 |
| KX 250 F | | 250 | 04-05 | FD164 | FD286 |



For other models years previous to 1990 visit **www.galferonline.es** · Para otros modelos anteriores al año 1990 visitar **www.galferonline.es**
For consult TÜV (ABE) type approvals visit **www.galfermoto.com --> DOWNLOAD --> TÜV CERTIFICATIONS** · Para consultar las homologaciones TÜV (ABE) visitar **www.galfermoto.com --> DESCARGAS --> CERTIFICACIONES TÜV**

| | | | | |
|---|---|---|---|---|
| KX 250 F | 250 | 06-10 | FD164 | FD286 |
| KX 250 F | 250 | 11-14 | FD164 | FD286 |
| KX 250 F | 250 | 15- | FD164 | FD286 |
| KXE 250 F | 250 | 03- | FD164 | FD286 |
| KLX 300 R | 300 | 96- | FD164 | FD093 |
| KLX 400 R | 400 | 03- | FD164 | FD093 |
| KLX 450 R | 450 | 07- | FD164 | FD286 |
| KX 450 F | 450 | 06-10 | FD164 | FD286 |
| KX 450 F | 450 | 11-14 | FD164 | FD286 |
| KX 450 F | 450 | 15- | FD164 | FD286 |
| KXE 450 F | 450 | 06- | FD164 | FD286 |
| KX 500 | 500 | 94-94 | FD164 | FD114 |
| KX 500 | 500 | 95- | FD164 | FD093 |
| KLX 650 R | 650 | 93- | FD164 | FD114 |
| KLX 650 S | 650 | 93- | FD164 | FD114 |
| **RIEJU** | | | | |
| MRX 250 | 250 | 06- | FD164 | FD093 |
| MRX 450 | 450 | 05- | FD164 | FD093 |
| **SCORPA** | | | | |
| ENDURO 2.5i | 250 | 06- | FD164 | FD093 |
| ENDURO 4.5i | 450 | 06- | FD164 | FD093 |
| ENDURO 5.1i | 510 | 06- | FD164 | FD093 |
| **SUZUKI** | | | | |
| RM 125 | 125 | 96-98 | FD164 | FD093 |
| RM 125 | 125 | 99-03 | FD164 | FD093 |
| RM 125 | 125 | 04-05 | FD164 | FD286 |
| RM 125 | 125 | 06- | FD164 | FD286 |
| DR 250 SB | 250 | 03- | FD164 | FD093 |
| DR-Z 250 E | 250 | 01- | FD164 | FD093 |
| RM 250 | 250 | 96-98 | FD164 | FD093 |
| RM 250 | 250 | 99-03 | FD164 | FD093 |
| RM 250 | 250 | 04-05 | FD164 | FD093 |
| RM 250 | 250 | 06- | FD164 | FD093 |
| RM 250 Z | 250 | 04-06 | FD164 | FD286 |
| RM 250 Z | 250 | 07-12 | FD164 | FD286 |
| RM 250 Z | 250 | 13- | FD164 | FD286 |
| DR-Z 400 E | 400 | 00- | FD164 | FD093 |
| DR-Z 400 S | 400 | 00- | FD164 | FD093 |
| DR-Z 400 S SUPER MOTARD | 400 | 05- | FD164 | FD093 |
| RM 450 Z | 450 | 05- | FD164 | FD286 |
| RMX 450 Z | 450 | 10- | FD164 | FD286 |
| DR 650 | 650 | 96- | FD164 | FD114 |
| **YAMAHA** | | | | |
| YZ 125, WR | 125 | 98-00 | FD164 | FD093 |
| YZ 125, WR | 125 | 01-02 | FD164 | FD093 |
| YZ 125, WR | 125 | 03-03 | FD164 | FD286 |
| YZ 125, WR | 125 | 04-07 | FD164 | FD286 |
| WR 250 F 4T | 250 | 03-06 | FD164 | FD286 |
| YZ 250 F | 250 | 03-06 | FD164 | FD286 |
| YZ 250 F, WR F 4T | 250 | 00-00 | FD164 | FD093 |
| YZ 250 F, WR F 4T | 250 | 01-02 | FD164 | FD093 |
| YZ 250 F, WR F 4T | 250 | 03-06 | FD164 | FD286 |
| YZ 250, WR | 250 | 99-00 | FD164 | FD093 |
| YZ 250, WR | 250 | 01-02 | FD164 | FD093 |
| WR 400 F | 400 | 98-98 | FD164 | FD093 |
| WR 400 F | 400 | 99-99 | FD164 | FD093 |
| YZ 400 F | 400 | 98-98 | FD164 | FD093 |
| YZ 400 F | 400 | 99-99 | FD164 | FD093 |
| WR 426 F | 425 | 00-01 | FD164 | FD093 |
| WR 426 F | 425 | 02-02 | FD164 | FD093 |
| YZ 426 F | 425 | 00-01 | FD164 | FD093 |
| YZ 426 F | 425 | 02-02 | FD164 | FD093 |
| WR 450 F | 450 | 03-11 | FD164 | FD286 |
| WR 450 F | 450 | 12- | FD164 | FD286 |
| YZ 450 F | 450 | 03-07 | FD164 | FD286 |

**FD 165** — mm 78,0 x 40,8 — 9,0 — A / A[1]

G1054 | G1805 | G1371 | G1396

| BRAND MARCA | MODEL MODELO | C.C. | YEAR | FRONT | REAR |
|---|---|---|---|---|---|
| **ALFER** | | | | | |
| 125 VR 4T | | 125 | 03- | FD138 | FD165 |
| 125 VR 4T NO LIMITS | | 125 | 03- | FD138 | FD165 |
| 250 VR ENDURO | | 250 | 95- | FD138 | FD165 |
| 250 VR MOTOCROSS | | 250 | 95- | FD138 | FD165 |
| NO LIMITS | | 250 | 95- | FD138 | FD165 |
| **ATK** | | | | | |
| TODOS MODELOS | | | 97- | FD138 | FD165 |
| **BENELLI** | | | | | |
| 510 ENDURO | | 510 | 08- | FD138 | FD165 |
| **CCM** | | | | | |
| 404 DS SUPER MOTARD | | 404 | 03- | FD138 | FD165 |
| **FACTORY** | | | | | |
| YR 250 | | 250 | 98- | FD138 | FD165 |
| **GAS GAS** | | | | | |
| TT 125 | | 125 | 95- | FD138 | FD165 |
| EC 200 | | 200 | 99-00 | FD138 | FD165 |
| EC 250 | | 250 | 99-00 | FD138 | FD165 |
| FSE 250 4T | | 250 | 99- | FD138 | FD165 |
| MC 250 | | 250 | 99-00 | FD138 | FD165 |
| TT 250 | | 250 | 95- | FD138 | FD165 |
| EC 300 | | 300 | 99-00 | FD138 | FD165 |
| EC 400 FSE | | 400 | 99-00 | FD138 | FD165 |
| **HUSABERG** | | | | | |
| 350 FC | | 350 | 95-99 | FD138 | FD165 |
| 350 FE | | 350 | 95-99 | FD138 | FD165 |
| 350 MC | | 350 | 94- | FD089 | FD165 |
| 400 FE | | 400 | 00- | FD138 | FD165 |
| 450 FC/FE | | 450 | 04- | FD138 | FD165 |
| 450 FS | | 450 | 04-04 | FD068 | FD165 |
| 450 FSE | | 450 | 05- | | FD165 |
| 501 FC | | 501 | 95-99 | FD138 | FD165 |
| 501 FE | | 501 | 95-99 | FD138 | FD165 |
| 501 MC | | 501 | 94-99 | FD089 | FD165 |
| 550 FC/FE | | 550 | 04- | FD138 | FD165 |
| 600 FC | | 600 | 95-99 | FD138 | FD165 |
| 600 FE | | 600 | 95-99 | FD138 | FD165 |
| 650 FC/FE | | 650 | 04- | FD138 | FD165 |
| **HUSQVARNA** | | | | | |
| 125 CR | | 125 | 94-99 | FD138 | FD165 |
| 125 CR | | 125 | 00-03 | FD138 | FD165 |
| 125 SM S | | 125 | 00- | FD138 | FD165 |
| 125 SM S 4T | | 125 | 11- | FD138 | FD165 |
| 125 TE 4T | | 125 | 11-13 | FD138 | FD165 |
| 125 WR | | 125 | 94-99 | FD138 | FD165 |
| 125 WR | | 125 | 00-05 | FD138 | FD165 |
| 125 WRE | | 125 | 94-99 | FD138 | FD165 |
| 125 WRE | | 125 | 00- | FD138 | FD165 |
| 250 CR | | 250 | 94-99 | FD138 | FD165 |
| 250 CR | | 250 | 00-03 | FD138 | FD165 |
| 250 WR | | 250 | 94-99 | FD138 | FD165 |
| 250 WR | | 250 | 00- | FD138 | FD165 |
| 350 TE | | 350 | 94-99 | FD138 | FD165 |
| 360 CR | | 360 | 94-99 | FD138 | FD165 |
| 360 WR | | 360 | 94-99 | FD138 | FD165 |
| 360 WR | | 360 | 00- | FD138 | FD165 |
| TE 410 | | 410 | 94-99 | FD138 | FD165 |
| TE 410/E | | 410 | 00- | FD138 | FD165 |
| 450 SM R | | 450 | 01-04 | FD068 | FD165 |
| 450 SM R | | 450 | 05-05 | FD262 | FD165 |
| 450 SM S | | 450 | 01-04 | FD176 | FD165 |
| 510 TE | | 510 | 95-99 | FD138 | FD165 |
| 510 TE | | 510 | 00-04 | FD138 | FD165 |
| 570 TE | | 570 | 00- | FD138 | FD165 |
| 610 TC | | 610 | 94-99 | FD138 | FD165 |
| 610 TC | | 610 | 00- | FD138 | FD165 |
| 610 TE | | 610 | 94-99 | FD138 | FD165 |
| 610 TE | | 610 | 00- | FD138 | FD165 |
| 630 TE | | 630 | 10- | FD138 | FD165 |
| **KTM** | | | | | |
| 125 EXC/EGS/SX | | 125 | 95-03 | FD138 | FD165 |
| 125 GS | | 125 | 94-94 | FD138 | FD165 |
| 125 SX | | 125 | 94-03 | FD138 | FD165 |
| 200 EGS | | 200 | 99-02 | FD138 | FD165 |
| 200 EXC | | 200 | 98-03 | FD138 | FD165 |
| 200 SX | | 200 | 03-03 | FD138 | FD165 |
| 250 EGS | | 250 | 99- | FD138 | FD165 |
| 250 EXC / 4T | | 250 | 03-03 | FD138 | FD165 |
| 250 EXC/EGS/SX | | 250 | 94-02 | FD138 | FD165 |
| 250 GS | | 250 | 94- | FD138 | FD165 |
| 250 MX | | 250 | 03- | FD138 | FD165 |
| 250 SX | | 250 | 94-02 | FD138 | FD165 |
| 300 EXC | | 300 | 03-03 | FD138 | FD165 |
| 350 LC4 EXC | | 350 | 94- | FD138 | FD165 |
| 400 LC4 EGS | | 400 | 96- | FD138 | FD165 |
| 400 LC4 EGS | | 400 | 94-95 | FD138 | FD165 |
| 440 SX | | 440 | 94- | FD138 | FD165 |
| 450 EXC | | 450 | 03-03 | FD138 | FD165 |
| 525 EXC | | 525 | 03-03 | FD138 | FD165 |
| 525 SX | | 525 | 03-03 | FD138 | FD165 |
| 540 SXC | | 540 | 99- | FD138 | FD165 |
| 550 MG,XC | | 550 | 94- | FD138 | FD165 |
| 600 4T GS | | 600 | 94- | FD138 | FD165 |
| 620 LC4 EXC, EGS, SX | | 620 | 94- | FD138 | FD165 |
| 625 EXC | | 625 | 03- | FD138 | FD165 |
| 640 LC4 ENDURO | | 640 | 99- | FD138 | FD165 |
| 690 ENDURO | | 690 | 08- | FD172 | FD165 |
| 690 ENDURO R | | 690 | 09- | FD172 | FD165 |
| **TM** | | | | | |
| 80 GS, MC | | 80 | 93- | FD138 | FD165 |
| MX 85 | | 85 | 01-04 | FD138 | FD165 |
| 125 CROSS | | 125 | 00- | FD138 | FD165 |
| 125 ENDURO/MX | | 125 | 00- | FD138 | FD165 |
| 125 GS, MC | | 125 | 93- | FD138 | FD165 |
| 250 ENDURO 4T | | 250 | 00- | FD138 | FD165 |
| 300 ENDURO 4T | | 300 | 01- | FD138 | FD165 |
| 400 4T E/CROSS | | 400 | 00-02 | FD138 | FD165 |
| **VERTEMATI** | | | | | |
| 492 ENDURO | | 500 | 99-00 | FD138 | FD165 |
| 495 CROSS | | 500 | 99-00 | FD138 | FD165 |
| C500 | | 500 | 01-01 | FD138 | FD165 |
| E 510 | | 500 | 02- | FD138 | FD165 |
| **VOR** | | | | | |
| MX 350 | | 350 | 01- | FD138 | FD165 |
| EN 400 | | 400 | 00- | FD138 | FD165 |
| EN 450 | | 450 | 01- | FD138 | FD165 |
| EN 503 | | 503 | 00- | FD138 | FD165 |
| MX 503 | | 503 | 00- | FD138 | FD165 |
| EN 530 | | 530 | 01- | FD138 | FD165 |
| **YAMAHA** | | | | | |
| WR 125 R | | 125 | 09- | FD266 | FD165 |
| TT 600 | | 600 | 95-97 | FD138 | FD165 |
| TT 600 R | | 600 | 99-02 | FD138 | FD165 |
| TT 600 RE | | 600 | 03- | FD138 | FD165 |

**FD 170** — mm 39,8 x 56,3 — 7,3 — A / A

G1054 | G1805 |

| BRAND MARCA | MODEL MODELO | C.C. | YEAR | FRONT | REAR |
|---|---|---|---|---|---|
| **KTM** | | | | | |
| 50 CHRONO | | 50 | 95- | FD170 | MF630 |

**FD 172** — mm 108,7 x 39,8 — 7,5 — A / A[1]

G1054 | G1370 |

| BRAND MARCA | MODEL MODELO | C.C. | YEAR | FRONT | REAR |
|---|---|---|---|---|---|
| **KTM** | | | | | |
| 690 ENDURO | | 690 | 08- | FD172 | FD165 |
| 690 ENDURO R | | 690 | 09- | FD172 | FD165 |

## FD 176

mm 75,0 x 55,5 | 8,7 | A | A

G1054 | G1370 | G1375 | G1300

| BRAND MARCA | MODEL MODELO | C.C. | YEAR | FRONT | REAR |
|---|---|---|---|---|---|
| **HUSQVARNA** | | | | | |
| | 450 SM S | 450 | 01-04 | FD176 | FD165 |

## FD 177

mm 76,5 x 41,3 | 8,2 | A | B

mm 99,0 x 39,8 | 7,5 | A | B

G1054

| BRAND MARCA | MODEL MODELO | C.C. | YEAR | FRONT | REAR |
|---|---|---|---|---|---|
| **SUZUKI** | | | | | |
| | RM 80 | 80 | 96-02 | FD177 | FD094 |
| | RM 85 / L | 85 | 03-04 | FD177 | FD094 |

## FD 187

mm 77,4 x 42,3 | 9,0 | A | B

mm 98,8 x 42,3 | 9,0 | A | B

G1054 | G1380

| BRAND MARCA | MODEL MODELO | C.C. | YEAR | FRONT | REAR |
|---|---|---|---|---|---|
| **CCM** | | | | | |
| | SM 125 | 125 | 08- | FD187 | FD145 |

## FD 204

mm 94,1 x 35,7 | 7,4 | A | B

mm 120,0 x 26,5 | 7,0 | A | B

G1054 | G1396

| BRAND MARCA | MODEL MODELO | C.C. | YEAR | FRONT | REAR |
|---|---|---|---|---|---|
| **KAWASAKI** | | | | | |
| | KX 80 R7 KX 80-II | 80 | 97-99 | FD204 | FD076 |
| | KX 85 | 85 | 00-03 | FD204 | FD076 |
| | KX 85 | 85 | 03- | FD204 | FD076 |
| | KX 100 | 100 | 97- | FD204 | FD076 |
| **SUZUKI** | | | | | |
| | RM 85 / L | 85 | 05- | FD204 | FD362 |

## FD 220

mm 50,8 x 53,9 | 8,0 | A | A

G1054 | G1371 | G1380

| BRAND MARCA | MODEL MODELO | C.C. | YEAR | FRONT | REAR |
|---|---|---|---|---|---|
| **DERBI** | | | | | |
| | SENDA DRD 125 SM 4T 4V | 125 | 09- | FD220 | FD252 |
| **RIEJU** | | | | | |
| | MARATHON PRO 125 | 125 | 09- | FD220 | FD252 |
| | TANGO OFF ROAD 250 | 250 | 09- | FD220 | FD065 |
| | TANGO ROAD 250 | 250 | 09- | FD220 | FD065 |

## FD 223

mm 50,0 x 43,8 | 6,0 | A | A

G1054 | G1805

| BRAND MARCA | MODEL MODELO | C.C. | YEAR | FRONT | REAR |
|---|---|---|---|---|---|
| **AJP** | | | | | |
| | PR 4 125 ENDURO | 125 | 05-09 | FD133 | FD223 |
| | PR 4 125 SM | 125 | 05-09 | FD133 | FD223 |
| | ENDURO 250 | 250 | 05- | FD133 | FD223 |
| **BETA** | | | | | |
| | EVO 80 JUNIOR | 80 | 09- | FD223 | FD335 |
| | REV 3 | 80 | 08- | FD223 | FD335 |
| | EVO 125 | 125 | 09-11 | FD223 | FD428 |
| | EVO 125 MY12 | 125 | 12- | FD223 | FD428 |
| | REV 3 | 125 | 00-04 | FD223 | FD223 |
| | REV 3 | 125 | 05-05 | FD223 | FD223 |
| | REV 3 | 125 | 06- | FD223 | FD335 |
| | EVO 200 | 200 | 09-11 | FD223 | FD428 |
| | EVO 200 MY12 | 200 | 12- | FD223 | FD428 |
| | REV 3 | 200 | 06- | FD223 | FD335 |
| | EVO 250 2T | 250 | 09-11 | FD223 | FD428 |
| | EVO 250 2T MY12 | 250 | 12- | FD223 | FD428 |
| | EVO 250 4T | 250 | 09-11 | FD223 | FD428 |
| | EVO 250 4T MY12 | 250 | 12- | FD223 | FD428 |
| | REV 3 | 250 | 00-04 | FD223 | FD223 |
| | REV 3 | 250 | 05-05 | FD223 | FD224 |
| | REV 3 | 250 | 06- | FD223 | FD335 |
| | REV 4T | 250 | 07- | FD223 | FD335 |
| | REV 3 | 270 | 05- | FD223 | FD335 |
| | EVO 290 2T | 290 | 09- | FD223 | FD428 |
| | EVO 300 2T MY12 | 300 | 12- | FD223 | FD428 |
| | EVO 300 4T | 300 | 09- | FD223 | FD428 |
| | EVO 300 4T MY12 | 300 | 12- | FD223 | FD428 |
| **GAS GAS** | | | | | |
| | TRIAL 125 4T | 125 | 11- | FD223 | MF |
| | TXT 125 | 125 | 04- | FD223 | FD224 |
| | TXT 250 | 250 | 03-03 | FD223 | FD224 |
| | TXT 250 | 250 | 04- | FD223 | FD224 |
| | TXT 280 | 280 | 03-03 | FD223 | FD224 |
| | TXT 280 | 280 | 04- | FD223 | FD224 |
| | TXT 300 | 300 | 04- | FD223 | FD224 |
| **MONTESA** | | | | | |
| | COTA 4 RT | 250 | 05-11 | FD223 | FD224 |
| | COTA 260 4RT | 260 | 15- | FD223 | FD224 |
| **OSSA** | | | | | |
| | TR 125i | 125 | 15- | FD223 | FD224 |
| | TR 250i | 250 | 15- | FD223 | FD224 |
| | EXPLORER 280i | 280 | 12- | FD223 | FD224 |
| | TR 280i | 280 | 10- | FD223 | FD224 |
| | TR 300i | 300 | 15- | FD223 | FD224 |
| **SCORPA** | | | | | |
| | SY 125 F | 125 | 05- | FD223 | FD224 |
| | TWENTY 125 | 125 | 15- | FD223 | FD224 |
| | SY 500 | 163 | 08- | FD223 | FD224 |
| | SY 175 F | 175 | 05- | FD223 | FD224 |
| | SY 250 | 250 | 05-05 | FD223 | FD224 |
| | SY 250 F | 250 | 06- | FD223 | FD224 |
| | SY 250 FR | 250 | 10- | FD223 | FD224 |
| | TWENTY 250 | 250 | 15- | FD223 | FD224 |
| | TWENTY 300 | 300 | 15- | FD223 | FD224 |
| **SHERCO** | | | | | |
| | 0.8 | 80 | 03-12 | FD223 | FD224 |
| | 80 ST | 80 | 15- | FD223 | FD224 |
| | 1.25 | 125 | 02-05 | FD223 | FD224 |
| | 125 ST | 125 | 15- | FD223 | FD224 |
| | ST 1.25 | 125 | 06-12 | FD223 | FD224 |
| | ST 2.0 | 200 | 06- | FD223 | FD224 |
| | 2.5 02 Series | 250 | 02-05 | FD223 | FD224 |
| | 250 ST | 250 | 15- | FD223 | FD224 |
| | ST 2.5 | 250 | 06-12 | FD223 | FD224 |
| | 2.9 | 290 | 01-05 | FD223 | FD224 |
| | 290 ST | 290 | 15- | FD223 | FD224 |
| | ST 2.9 | 290 | 06-11 | FD223 | FD224 |
| | 305 ST | 305 | 15- | FD223 | FD224 |
| | 3.2 4T | 320 | 05- | FD223 | FD224 |

## FD 224

mm 36,0 x 39,0 | 6,0 | A | A

G1054 | G1805

| BRAND MARCA | MODEL MODELO | C.C. | YEAR | FRONT | REAR |
|---|---|---|---|---|---|
| **BETA** | | | | | |
| | REV 3 | 250 | 05-05 | FD223 | FD224 |
| **GAS GAS** | | | | | |
| | MC 65 | 65 | 06- | FD224 | FD224 |
| | TXT CADET | 80 | 06- | FD224 | FD224 |
| | TXT PRO 80 RACING | 80 | 15- | FD225 | FD224 |
| | TXT ROOKIE | 80 | 06- | FD225 | FD224 |
| | TXT 125 | 125 | 04- | FD223 | FD224 |
| | TXT PRO RACING 125 | 125 | 12-13 | FD446 | FD224 |
| | TXT PRO RACING 125 | 125 | 14- | FD460 | FD224 |
| | TXT 250 | 250 | 03-03 | FD223 | FD224 |
| | TXT 250 | 250 | 04- | FD223 | FD224 |
| | TXT PRO RACING 250 | 250 | 12-13 | FD446 | FD224 |
| | TXT PRO RACING 250 | 250 | 14- | FD460 | FD224 |
| | TXT 280 | 280 | 03-03 | FD223 | FD224 |
| | TXT 280 | 280 | 04- | FD223 | FD224 |
| | TXT PRO RACING 280 | 280 | 12-13 | FD446 | FD224 |
| | TXT PRO RACING 280 | 280 | 14- | FD460 | FD224 |
| | TXT 300 | 300 | 04- | FD223 | FD224 |
| | TXT PRO RACING 300 | 300 | 14- | FD460 | FD224 |
| **HUSQVARNA** | | | | | |
| | 50 CR SENIOR PRO | 50 | 05- | FD224 | FD230 |
| | 100 TE | 100 | 05- | FD224 | FD230 |
| **JOTAGAS** | | | | | |
| | JTG 300 JT | 300 | 12- | FD446 | FD224 |
| **MONTESA** | | | | | |
| | COTA 4 RT | 250 | 05-11 | FD223 | FD224 |
| | COTA 4 RT | 250 | 12- | FD446 | FD224 |
| | COTA 260 4RT | 260 | 15- | FD223 | FD224 |
| | COTA 260 4RT RACE REPLICA | 260 | 15- | FD460 | FD224 |
| **OSSA** | | | | | |
| | TR 125i | 125 | 15- | FD223 | FD224 |
| | TR 250i | 250 | 15- | FD223 | FD224 |
| | EXPLORER 280i | 280 | 12- | FD223 | FD224 |
| | TR 280i | 280 | 10- | FD223 | FD224 |
| | TR 300i | 300 | 15- | FD223 | FD224 |
| | TR 300i FACTORY R | 300 | 15- | FD460 | FD224 |
| **POLINI** | | | | | |
| | XP 65 R MINICROSS | 65 | 08- | FD224 | FD224 |
| | XP 4T CROSS | 100 | 08- | FD224 | FD224 |
| | XP 4T RACING CROSS | 100 | 08- | FD224 | FD224 |
| | XP 4 OFF ROAD | 125 | 08- | FD224 | FD224 |
| **SCORPA** | | | | | |
| | SY 125 F | 125 | 05- | FD223 | FD224 |
| | TWENTY 125 | 125 | 15- | FD223 | FD224 |
| | TY S 125 F | 125 | 05- | FD065 | FD224 |
| | SY 500 | 163 | 08- | FD223 | FD224 |
| | SY 175 F | 175 | 05- | FD223 | FD224 |
| | TY S 175 F | 175 | 06- | FD065 | FD224 |
| | SY 250 | 250 | 05-05 | FD223 | FD224 |



For other models years previous to 1990 visit **www.galferonline.es** - Para otros modelos anteriores al año 1990 visitar **www.galferonline.es**
For consult TÜV (ABE) type approvals visit **www.galfermoto.com --> DOWNALOAD --> TÜV CERTIFICATIONS** - Para consultar las homologaciones TÜV (ABE) visitar **www.galfermoto.com --> DESCARGAS --> CERTIFICACIONES TÜV**

| | | | | |
|---|---|---|---|---|
| SY 250 F | 250 | 06- | FD223 | FD224 |
| SY 250 FR | 250 | 10- | FD223 | FD224 |
| TWENTY 250 | 250 | 15- | FD223 | FD224 |
| TWENTY 300 | 300 | 15- | FD223 | FD224 |
| **SHERCO** | | | | |
| 0.8 | 80 | 03-12 | FD223 | FD224 |
| 80 ST | 80 | 15- | FD223 | FD224 |
| ST 8.0 | 80 | 13-14 | FD446 | FD224 |
| 1.25 | 125 | 02-05 | FD223 | FD224 |
| 125 ST | 125 | 15- | FD223 | FD224 |
| ST 1.25 | 125 | 06-12 | FD223 | FD224 |
| ST 1.25 | 125 | 13-14 | FD446 | FD224 |
| ST 2.0 | 200 | 06- | FD223 | FD224 |
| 2.5 02 Series | 250 | 02-05 | FD223 | FD224 |
| 250 ST | 250 | 15- | FD223 | FD224 |
| ST 2.5 | 250 | 06-12 | FD223 | FD224 |
| ST 2.5 | 250 | 13-14 | FD446 | FD224 |
| 2.9 | 290 | 01-05 | FD223 | FD224 |
| 290 ST | 290 | 15- | FD223 | FD224 |
| ST 2.9 | 290 | 06-11 | FD223 | FD224 |
| ST 2.9 | 290 | 12-14 | FD446 | FD224 |
| ST 3.0 | 300 | 13- | FD446 | FD224 |
| 305 ST | 305 | 15- | FD223 | FD224 |
| 3.2 4T | 320 | 05- | FD223 | FD224 |
| **VERTIGO** | | | | |
| COMBAT CAMO | 300 | 15- | FD460 | FD224 |
| COMBAT ICE HELL | 300 | 15- | FD460 | FD224 |

## FD 225

mm 56,8 x 44,3 | 6,5 | A | A

G1054 | G1805

| BRAND MARCA | MODEL MODELO | C.C. | YEAR | FRONT | REAR |
|---|---|---|---|---|---|
| **GAS GAS** | | | | | |
| EC ENDUCROSS BOY | | 70 | 99- | FD225 | FD225 |
| TXT BOY | | 70 | 99- | FD225 | FD225 |
| TXT PRO 80 RACING | | 80 | 15- | FD225 | FD224 |
| TXT ROOKIE | | 80 | 03-05 | FD225 | FD225 |
| TXT ROOKIE | | 80 | 06- | FD225 | FD224 |
| TXT 125 | | 125 | 99-03 | FD225 | FD225 |
| TXT 200 | | 200 | 99- | FD225 | FD225 |
| TXT 250 | | 250 | 99-02 | FD225 | FD225 |
| TXT 270 | | 270 | 99-01 | FD225 | FD225 |
| TXT 280 | | 280 | 00-02 | FD225 | FD225 |
| TXT 321 | | 321 | 99- | FD225 | FD225 |

## FD 230

mm 43,3 x 25,9 | 5,1 | A | A[1]

G1054 | G1396

| BRAND MARCA | MODEL MODELO | C.C. | YEAR | FRONT | REAR |
|---|---|---|---|---|---|
| **HUSQVARNA** | | | | | |
| 50 CR SENIOR PRO | | 50 | 05- | FD224 | FD230 |
| CR 50 | | 50 | 11- | FD230 | FD230 |
| SM 50 | | 50 | 11- | FD230 | FD230 |
| 100 TE | | 100 | 05- | FD224 | FD230 |
| **KTM** | | | | | |
| 50 LC PRO SENIOR | | 50 | 04- | FD230 | FD230 |
| 50 SX | | 50 | 06- | FD230 | FD230 |
| 65 SX | | 65 | 04-08 | FD265 | FD230 |
| 65 XC | | 65 | 08- | FD265 | FD230 |
| **METRAKIT** | | | | | |
| SRM 110 4T | | 110 | 07- | FD265 | FD230 |

## FD 238

mm 50,0 x 43,8 | 6,0 | A | A

G1054 | G1805

| BRAND MARCA | MODEL MODELO | C.C. | YEAR | FRONT | REAR |
|---|---|---|---|---|---|
| **MONTESA** | | | | | |
| COTA 315 R | | 315 | 01- | FD238 | FD239 |
| **SCORPA** | | | | | |
| SY 250 | | 250 | 00-04 | FD238 | FD239 |

## FD 239

mm 36,0 x 39,0 | 6,0 | A | A

G1054 | G1805

| BRAND MARCA | MODEL MODELO | C.C. | YEAR | FRONT | REAR |
|---|---|---|---|---|---|
| **MONTESA** | | | | | |
| COTA 315 R | | 315 | 01- | FD238 | FD239 |
| **SCORPA** | | | | | |
| SY 250 | | 250 | 00-04 | FD238 | FD239 |

## FD 252

mm 56,0 x 36,0 | 10,2 | A | B

mm 88,0 x 49,0 | 7,6 | A | B

G1054

| BRAND MARCA | MODEL MODELO | C.C. | YEAR | FRONT | REAR |
|---|---|---|---|---|---|
| **AJP** | | | | | |
| PR 4 125 ENDURO / PRO | | 125 | 10- | FD162 | FD252 |
| PR 4 125 SM / PRO | | 125 | 10- | FD162 | FD252 |
| PR 4 200 ENDURO / PRO | | 200 | 10- | FD162 | FD252 |
| PR 4 200 SM / PRO | | 200 | 10- | FD162 | FD252 |
| **DERBI** | | | | | |
| SENDA DRD 125 SM 4T 4V | | 125 | 09- | FD220 | FD252 |
| **HM** | | | | | |
| DERAPAGE 4T | | 125 | 11- | FD087 | FD252 |
| **RIEJU** | | | | | |
| MARATHON PRO 125 | | 125 | 09- | FD220 | FD252 |

## FD 254

mm 51,8 x 40,0 | 7,6 | A | B

mm 67,7 x 36,5 | 7,6 | A | B

G1054 | G1396

| BRAND MARCA | MODEL MODELO | C.C. | YEAR | FRONT | REAR |
|---|---|---|---|---|---|
| **KAWASAKI** | | | | | |
| KX 65 | | 65 | 00-04 | FD254 | FD095 |
| KX 65 | | 65 | 05- | FD254 | FD095 |
| **SUZUKI** | | | | | |
| RM 65 | | 65 | 03- | FD254 | FD095 |

## FD 262

mm 35,0 x 40,5 | 7,5 | A (4x)

G1054 | G1370 | G1375 | G1003 | G1300

| BRAND MARCA | MODEL MODELO | C.C. | YEAR | FRONT | REAR |
|---|---|---|---|---|---|
| **HUSQVARNA** | | | | | |
| 450 SM / RR | | 450 | 06- | FD262 | FD291 |
| 450 SM R | | 450 | 05-05 | FD262 | FD165 |
| SMR 449 | | 450 | 11- | FD262 | FD291 |
| **SHERCO** | | | | | |
| 4.5 4T SM if | | 450 | 09- | FD262 | FD093 |
| **TM** | | | | | |
| SMR 450 F | | 450 | 14- | FD262 | FD286 |
| SMX 450 F | | 450 | 04-14 | FD262 | FD286 |

## FD 265

mm 61,5 x 31,1 | 6,5 | A | A[1]

G1054 | G1396

| BRAND MARCA | MODEL MODELO | C.C. | YEAR | FRONT | REAR |
|---|---|---|---|---|---|
| **HUSQVARNA** | | | | | |
| 65 CR | | 65 | 11- | FD265 | FD441 |
| **KTM** | | | | | |
| 65 SX | | 65 | 02-03 | FD265 | FD048 |
| 65 SX | | 65 | 04-08 | FD265 | FD230 |
| 65 SX | | 65 | 09- | FD265 | FD265 |
| 65 XC | | 65 | 08- | FD265 | FD230 |
| 85 SX | | 85 | 03-06 | FD265 | FD265 |
| 85 SX | | 85 | 07-10 | FD265 | FD265 |
| 85 SX | | 85 | 11-11 | FD265 | FD441 |
| 105 SX (USA) | | 105 | 04-06 | FD265 | FD265 |
| 105 XC | | 105 | 07- | FD265 | FD265 |
| **METRAKIT** | | | | | |
| SRM 110 4T | | 110 | 07- | FD265 | FD230 |

## FD 266

mm 102,1 x 38,7 | 8,3 | A | A[1]

G1054 | G1370 | G1375 | G1380

| BRAND MARCA | MODEL MODELO | C.C. | YEAR | FRONT | REAR |
|---|---|---|---|---|---|
| **HONDA** | | | | | |
| XR 400 MOTARD (DF017SM) | | 400 | 05- | FD266 | FD093 |
| **YAMAHA** | | | | | |
| WR 125 R | | 125 | 09- | FD266 | FD165 |
| WR 250 X | | 250 | 08- | FD266 | FD286 |

## FD 270

mm 50,0 x 47,2 | 6,8 | A | A

G1054 | G1380

| BRAND MARCA | MODEL MODELO | C.C. | YEAR | FRONT | REAR |
|---|---|---|---|---|---|
| **DERBI** | | | | | |
| FREEXTER 125 | | 125 | 06- | FD341 | FD270 |
| **SCORPA** | | | | | |
| T-RIDE 125 F | | 125 | 10- | FD409 | FD270 |
| **SHERCO** | | | | | |
| SE 1.25 F | | 125 | 10- | FD162 | FD270 |

## FD 278

mm 60,0 x 44,0 | 9,4 | A | A1

G1054 | G1396

| BRAND MARCA | MODEL MODELO | C.C. | YEAR | FRONT | REAR |
|---|---|---|---|---|---|
| **HM** | | | | | |
| | DERAPAGE RR | 50 | 09- | FD162 | FD278 |
| | CR 125 MOTARD | 125 | 03-06 | FD164 | FD278 |
| | CRE 125 R | 125 | 03- | FD164 | FD278 |
| | CRM 125 R | 125 | 07- | FD304 | FD278 |
| | CRM F 125 X | 125 | 08- | FD162 | FD278 |
| | CRF 150 R / R2 | 150 | 08- | FD076 | FD278 |
| | EASY 230 F ENDURO | 230 | 04- | FD164 | FD278 |
| | EASY 230 F MOTARD | 230 | 04- | FD164 | FD278 |
| | EASY 230 F TRAIL ID | 230 | 04- | FD164 | FD278 |
| | CR 250 MOTARD | 250 | 03- | FD164 | FD278 |
| | CRE 250 F | 250 | 03- | FD164 | FD278 |
| | CRE 250 R | 250 | 03- | FD164 | FD278 |
| | CRE 250 X | 250 | 09- | FD164 | FD278 |
| | CRF 250 MOTARD | 250 | 03-06 | FD164 | FD278 |
| | CRF 250 R | 250 | 09- | FD164 | FD278 |
| | CRM 250 X | 250 | 07- | FD304 | FD278 |
| | CRE 300 X | 300 | 09- | FD164 | FD278 |
| | CRE 450 F | 450 | 03- | FD164 | FD278 |
| | CRE 450 R | 450 | 09- | FD164 | FD278 |
| | CRE 450 X | 450 | 09- | FD164 | FD278 |
| | CRF 450 MOTARD | 450 | 03- | FD164 | FD278 |
| | CRF 450 R | 450 | 09- | FD164 | FD278 |
| | CRM F 450 R | 450 | 09- | FD304 | FD278 |
| | CRM F 450 X | 450 | 09- | FD304 | FD278 |
| | CRE F 490 X | 490 | 07- | FD164 | FD278 |
| | CRM F 490 X | 490 | 07- | FD304 | FD278 |
| | CRE 500 X | 500 | 09- | FD164 | FD278 |
| **HONDA** | | | | | |
| | CR 125 R | 125 | 02-04 | FD164 | FD278 |
| | CR 125 R | 125 | 05-07 | FD164 | FD278 |
| | CRF 150 R | 150 | 07- | FD076 | FD278 |
| | CRF 230 L | 230 | 08- | FD164 | FD278 |
| | CRF 230 M | 230 | 09- | FD164 | FD278 |
| | CR 250 R | 250 | 02-04 | FD164 | FD278 |
| | CR 250 R | 250 | 05-07 | FD164 | FD278 |
| | CRF 250 R | 250 | 04-07 | FD164 | FD278 |
| | CRF 250 R | 250 | 08-14 | FD164 | FD278 |
| | CRF 250 R | 250 | 15- | FD164 | FD278 |
| | CRF 250 X | 250 | 04- | FD164 | FD278 |
| | CRF 250 XR LD | 250 | 13- | FD164 | FD278 |
| | XR 250 R | 250 | 03- | FD164 | FD278 |
| | CRF 450 F/R | 450 | 01-03 | FD164 | FD278 |
| | CRF 450 F/R | 450 | 04-07 | FD164 | FD278 |
| | CRF 450 F/R | 450 | 08-14 | FD164 | FD278 |
| | CRF 450 R | 450 | 15- | FD164 | FD278 |
| | CRF 450 RALLY | 450 | 13- | FD164 | FD278 |
| | CRF 450 X | 450 | 04- | FD164 | FD278 |
| | CRF 450 XR LD | 450 | 13- | FD164 | FD278 |

## FD 284

mm 81,8 x 42,3 | 9,3 | A | A

G1054 | G1380

| BRAND MARCA | MODEL MODELO | C.C. | YEAR | FRONT | REAR |
|---|---|---|---|---|---|
| **HONDA** | | | | | |
| | FTR 223 | 223 | 00-02 | FD284 | MF |

## FD 286

mm 66,85 x 36,0 | 10,5 | A | A1

G1054 | G1396

| BRAND MARCA | MODEL MODELO | C.C. | YEAR | FRONT | REAR |
|---|---|---|---|---|---|
| **APRILIA** | | | | | |
| | MXV 450 | 450 | 07- | FD164 | FD286 |
| | RXV 450 | 450 | 06- | FD164 | FD286 |
| | SXV 450 | 450 | 06- | | FD286 |
| | RXV 550 | 550 | 07- | FD164 | FD286 |
| **GAS GAS** | | | | | |
| | EC 125 | 125 | 15- | FD164 | FD286 |
| | EC 125 SIX DAYS | 125 | 11- | FD164 | FD286 |
| | EC 200 SIX DAYS | 200 | 11- | FD164 | FD286 |
| | EC 250 E | 250 | 11- | FD164 | FD286 |
| | EC 250 F | 250 | 10- | FD164 | FD286 |
| | EC 250 SIX DAYS | 250 | 11- | FD164 | FD286 |
| | EC 250 YR | 250 | 12- | FD164 | FD286 |
| | EC 300 E | 300 | 11- | FD164 | FD286 |
| | EC 300 F | 300 | 15- | FD164 | FD286 |
| | EC 300 RACING | 300 | 09- | FD164 | FD286 |
| | EC 300 SIX DAYS | 300 | 11- | FD164 | FD286 |
| | EC 450 F | 450 | 15- | FD164 | FD286 |
| | EC 450 RAID | 450 | 15- | FD164 | FD286 |
| **HM** | | | | | |
| | DERAPAGE 2T | 125 | 11- | FD409 | FD286 |
| | DERAPAGE 2T COMPETICION | 125 | 11- | FD304 | FD286 |
| **KAWASAKI** | | | | | |
| | KL 125 ENDURO | 125 | 03- | FD164 | FD286 |
| | KLX 250 S | 250 | 08- | FD164 | FD286 |
| | KX 250 | 250 | 04-05 | FD164 | FD286 |
| | KX 250 | 250 | 06- | FD164 | FD286 |
| | KX 250 F | 250 | 04-05 | FD164 | FD286 |
| | KX 250 F | 250 | 06-10 | FD164 | FD286 |
| | KX 250 F | 250 | 11-14 | FD164 | FD286 |
| | KX 250 F | 250 | 15- | FD164 | FD286 |
| | KXE 250 F | 250 | 03- | FD164 | FD286 |
| | KLX 450 R | 450 | 07- | FD164 | FD286 |
| | KX 450 F | 450 | 06-10 | FD164 | FD286 |
| | KX 450 F | 450 | 11-14 | FD164 | FD286 |
| | KX 450 F | 450 | 15- | FD164 | FD286 |
| | KXE 450 F | 450 | 06- | FD164 | FD286 |
| **SHERCO** | | | | | |
| | 250 SE | 250 | 15- | FD138 | FD286 |
| | 250 SE-R | 250 | 15- | FD138 | FD286 |
| | 250 SEF | 250 | 15- | FD138 | FD286 |
| | 250 SEF-R | 250 | 15- | FD138 | FD286 |
| | SX 2.5 F | 250 | 10- | FD138 | FD286 |
| | 300 SE | 300 | 15- | FD138 | FD286 |
| | 300 SE-R | 300 | 15- | FD138 | FD286 |
| | 300 SEF | 300 | 15- | FD138 | FD286 |
| | 300 SEF-R | 300 | 15- | FD138 | FD286 |
| | SE 3.0 | 300 | 10-11 | FD138 | FD286 |
| | 4.5 4T | 450 | 04-08 | FD138 | FD286 |
| | 4.5 4T SM | 450 | 05-08 | FD068 | FD286 |
| | 450 SEF | 450 | 15- | FD138 | FD286 |
| | 450 SEF-R | 450 | 15- | FD138 | FD286 |
| | 5.1 4T | 510 | 06-08 | FD138 | FD286 |
| **SUZUKI** | | | | | |
| | RM 125 | 125 | 04-05 | FD164 | FD286 |
| | RM 125 | 125 | 06- | FD164 | FD286 |
| | RM 250 Z | 250 | 04-06 | FD164 | FD286 |
| | RM 250 Z | 250 | 07-12 | FD164 | FD286 |
| | RM 250 Z | 250 | 13- | FD164 | FD286 |
| | RM 450 Z | 450 | 05- | FD164 | FD286 |
| | RMX 450 Z | 450 | 10- | FD164 | FD286 |
| **TM** | | | | | |
| | MX 85 | 85 | 05- | FD138 | FD286 |
| | EN 125 | 125 | 04-14 | FD138 | FD286 |
| | MX 125 | 125 | 05-14 | FD138 | FD286 |
| | EN144 | 144 | 14- | FD138 | FD286 |
| | MX 144 | 144 | 15- | FD138 | FD286 |
| | EN 250 | 250 | 04-14 | FD138 | FD286 |
| | EN 250 F | 250 | 04-14 | FD138 | FD286 |
| | MX 250 | 250 | 05-14 | FD138 | FD286 |
| | MX 250 F | 250 | 05-14 | FD138 | FD286 |
| | EN 300 | 300 | 14- | FD138 | FD286 |
| | MX 300 | 300 | 14- | FD138 | FD286 |
| | EN 450 F | 450 | 04-14 | FD138 | FD286 |
| | MX 450 F | 450 | 05-14 | FD138 | FD286 |
| | SMR 450 F | 450 | 14- | FD262 | FD286 |
| | SMX 450 F | 450 | 04-14 | FD262 | FD286 |
| | EN 530 F | 530 | 04-14 | FD138 | FD286 |
| | MX 530 F | 530 | 05-14 | FD138 | FD286 |
| **YAMAHA** | | | | | |
| | YZ 125 | 125 | 08- | FD364 | FD286 |
| | YZ 125, WR | 125 | 03-03 | FD164 | FD286 |
| | YZ 125, WR | 125 | 04-07 | FD164 | FD286 |
| | WR 250 F 4T | 250 | 03-06 | FD164 | FD286 |
| | WR 250 F 4T | 250 | 07- | FD364 | FD286 |
| | WR 250 X | 250 | 08- | FD266 | FD286 |
| | YZ 250 | 250 | 08- | FD364 | FD286 |
| | YZ 250 F | 250 | 03-06 | FD164 | FD286 |
| | YZ 250 F | 250 | 07-08 | FD364 | FD286 |
| | YZ 250 F | 250 | 09- | FD364 | FD286 |
| | YZ 250 F, WR F 4T | 250 | 03-06 | FD164 | FD286 |
| | WR 450 F | 450 | 03-11 | FD164 | FD286 |
| | WR 450 F | 450 | 12- | FD164 | FD286 |
| | YZ 450 F | 450 | 03-07 | FD164 | FD286 |
| | YZ 450 F | 450 | 08-11 | FD364 | FD286 |
| | YZ 450 F | 450 | 12- | FD364 | FD286 |

## FD 291

mm 63,9 x 42,0 | 9,5 | A | A1

G1054 | G1396

| BRAND MARCA | MODEL MODELO | C.C. | YEAR | FRONT | REAR |
|---|---|---|---|---|---|
| **BENELLI** | | | | | |
| | BX 449 | 449 | 07- | FD138 | FD291 |
| **BMW** | | | | | |
| | G 450 X | 450 | 08- | FD138 | FD291 |
| | SPORT ENDURO 450 | 450 | 08- | FD138 | FD291 |
| **BREMBO OFF ROAD** | | | | | |
| | XQ21390 | | - | | FD291 |
| **HUSABERG** | | | | | |
| | 125 TE | 125 | 11- | FD138 | FD291 |
| | 250 FE | 250 | 13- | FD138 | FD291 |
| | 250 TE | 250 | 11- | FD138 | FD291 |
| | 300 TE | 300 | 11- | FD138 | FD291 |
| | 350 FE | 350 | 13- | FD138 | FD291 |
| | 390 FE | 390 | 10- | FD138 | FD291 |
| | 450 FE | 450 | 12- | FD138 | FD291 |
| | 450 FX | 450 | 10- | FD138 | FD291 |
| | 501 FE | 501 | 13- | FD138 | FD291 |
| | 570 FE | 570 | 09- | FD138 | FD291 |
| **HUSQVARNA** | | | | | |
| | 125 CR | 125 | 04-04 | FD138 | FD291 |
| | 125 CR | 125 | 05- | FD138 | FD291 |
| | 125 TC | 125 | 14- | FD138 | FD291 |
| | 125 TE | 125 | 14- | FD138 | FD291 |
| | 125 WR | 125 | 06- | FD138 | FD291 |
| | 250 CR | 250 | 04-04 | FD138 | FD291 |
| | 250 CR | 250 | 05- | FD138 | FD291 |
| | 250 FC | 250 | 14- | FD138 | FD291 |
| | 250 FE | 250 | 14- | FD138 | FD291 |
| | 250 TC | 250 | 04-04 | FD138 | FD291 |
| | 250 TC | 250 | 05-13 | FD138 | FD291 |
| | 250 TC | 250 | 14- | FD138 | FD291 |
| | 250 TE | 250 | 05- | FD138 | FD291 |
| | 250 TE | 250 | 14- | FD138 | FD291 |
| | 250 TE R | 250 | 13-13 | FD138 | FD291 |
| | 300 TE | 300 | 14- | FD138 | FD291 |
| | 300 WR | 300 | 09- | FD138 | FD291 |
| | 310 TE | 310 | 09- | FD138 | FD291 |
| | 310 TE R | 310 | 13- | FD138 | FD291 |
| | 350 FC | 350 | 14- | FD138 | FD291 |
| | 350 FE | 350 | 14- | FD138 | FD291 |



For other models years previous to 1990 visit **www.galferonline.es** · Para otros modelos anteriores al año 1990 visitar **www.galferonline.es**
For consult TÜV (ABE) type approvals visit **www.galfermoto.com --> DOWNLOAD --> TÜV CERTIFICATIONS** · Para consultar las homologaciones TÜV (ABE) visitar **www.galfermoto.com --> DESCARGAS --> CERTIFICACIONES TÜV**

| | | | | |
|---|---|---|---|---|
| 449 TE | 449 | 11- | FD138 | FD291 |
| 450 FC | 450 | 14- | FD138 | FD291 |
| 450 FE | 450 | 14- | FD138 | FD291 |
| 450 SM / RR | 450 | 06- | FD262 | FD291 |
| 450 TC | 450 | 05- | FD138 | FD291 |
| 450 TE | 450 | 05- | FD138 | FD291 |
| SMR 449 | 450 | 11- | FD262 | FD291 |
| TC 449 | 450 | 11- | FD138 | FD291 |
| TE 449 | 450 | 11- | FD138 | FD291 |
| 501 FE | 501 | 14- | FD138 | FD291 |
| 510 TC | 510 | 04-04 | FD138 | FD291 |
| 510 TC | 510 | 05- | FD138 | FD291 |
| 510 TE | 510 | 05- | FD138 | FD291 |
| TE 511 | 511 | 11- | FD138 | FD291 |
| **KTM** | | | | |
| 125 EXC | 125 | 04- | FD138 | FD291 |
| 125 SX | 125 | 04- | FD138 | FD291 |
| 144 SX | 144 | 08- | FD138 | FD291 |
| 150 XC | 150 | 10- | FD138 | FD291 |
| 200 EXC | 200 | 04- | FD138 | FD291 |
| 200 SX | 200 | 04- | FD138 | FD291 |
| 250 F | 250 | 06- | FD138 | FD291 |
| 250 EXC / 4T | 250 | 04- | FD138 | FD291 |
| 250 EXC F | 250 | 15- | FD138 | FD291 |
| 250 SX | 250 | 03- | FD138 | FD291 |
| 250 SX F | 250 | 15- | FD138 | FD291 |
| 250 XC / F / W | 250 | 06- | FD138 | FD291 |
| 300 EXC | 300 | 04- | FD138 | FD291 |
| 300 EXC - E | 300 | 08- | FD138 | FD291 |
| 300 MXC | 300 | 04- | FD138 | FD291 |
| 300 XC / W | 300 | 06- | FD138 | FD291 |
| 350 ECX F | 350 | 12- | FD138 | FD291 |
| 350 SX F | 350 | 11- | FD138 | FD291 |
| 350 SX FACTORY | 350 | 10- | FD138 | FD291 |
| 350 XC F | 350 | 11- | FD138 | FD291 |
| 400 EXC | 400 | 04- | FD138 | FD291 |
| 450 EXC | 450 | 04- | FD138 | FD291 |
| 450 EXC - R | 450 | 08- | FD138 | FD291 |
| 450 MXC | 450 | 04- | FD138 | FD291 |
| 450 RALLY | 450 | 11- | FD138 | FD291 |
| 450 SMR | 450 | 07- | FD304 | FD291 |
| 450 SX | 450 | 03- | FD138 | FD291 |
| 450 SXF | 450 | 07- | FD138 | FD291 |
| 450 XC | 450 | 06- | FD138 | FD291 |
| 450 XC SIX DAYS | 450 | 10- | FD138 | FD291 |
| 500 EXC | 500 | 14- | FD138 | FD291 |
| 505 SX | 505 | 07- | FD138 | FD291 |
| 525 EXC | 525 | 04- | FD138 | FD291 |
| 525 MXC | 525 | 04- | FD138 | FD291 |
| 525 SX | 525 | 04- | FD138 | FD291 |
| 530 EXC - R | 530 | 08- | FD138 | FD291 |
| 530 XC / W | 530 | 08- | FD138 | FD291 |
| 530 XC SIX DAYS | 530 | 10- | FD138 | FD291 |
| **OSSA** | | | | |
| ENDURO 300i | 300 | 12- | FD138 | FD291 |
| **RIEJU** | | | | |
| MARATHON 250 | 250 | 09- | FD138 | FD291 |
| MARATHON 450 | 450 | 09- | FD138 | FD291 |
| **SHERCO** | | | | |
| SE 2.5i | 250 | 12- | FD138 | FD291 |
| SE 3.0i | 300 | 12- | FD138 | FD291 |
| SE 4.5i | 450 | 12- | FD138 | FD291 |
| SE 5.1i | 510 | 12- | FD138 | FD291 |

## FD 299

mm: 46,4 x 45,3 | 6,5 | A | A

G1054

| BRAND MARCA | MODEL MODELO | C.C. | YEAR | FRONT | REAR |
|---|---|---|---|---|---|
| **YAMAHA** | | | | | |
| YZ 80 | | 80 | 93-02 | FD097 | FD299 |
| YZ 85 / LW | | 85 | 03- | FD097 | FD299 |

## FD 304

mm: 35,0 x 46,0 | 7,6 | A (4x)

G1054 | G1375

| BRAND MARCA | MODEL MODELO | C.C. | YEAR | FRONT | REAR |
|---|---|---|---|---|---|
| HM | | | | | |
| CRM 125 R | | 125 | 07- | FD304 | FD278 |
| DERAPAGE 2T COMPETICION | | 125 | 11- | FD304 | FD286 |
| CRM 250 X | | 250 | 07- | FD304 | FD278 |
| CRM F 450 R | | 450 | 09- | FD304 | FD278 |
| CRM F 450 X | | 450 | 09- | FD304 | FD278 |
| CRM F 490 X | | 490 | 07- | FD304 | FD278 |
| **KTM** | | | | | |
| 450 SMR | | 450 | 07- | FD304 | FD291 |

## FD 335

mm: 41,0 x 44,7 | 6,4 | A | A[1]

G1054 | G1805

| BRAND MARCA | MODEL MODELO | C.C. | YEAR | FRONT | REAR |
|---|---|---|---|---|---|
| **BETA** | | | | | |
| EVO 80 JUNIOR | | 80 | 09- | FD223 | FD335 |
| REV 3 | | 80 | 08- | FD223 | FD335 |
| REV 3 | | 125 | 06- | FD223 | FD335 |
| REV 3 | | 200 | 06- | FD223 | FD335 |
| REV 3 | | 250 | 06- | FD223 | FD335 |
| REV 4T | | 250 | 07- | FD223 | FD335 |
| REV 3 | | 270 | 05- | FD223 | FD335 |

## FD 341

mm: 69,9 x 51,6 | 7,5 | A | A

G1054

| BRAND MARCA | MODEL MODELO | C.C. | YEAR | FRONT | REAR |
|---|---|---|---|---|---|
| **BLATA** | | | | | |
| MOTARD 125 | | 125 | 07- | FD341 | FD065 |
| **DERBI** | | | | | |
| FREEXTER 125 | | 125 | 06- | FD341 | FD270 |
| **MOTORHISPANIA** | | | | | |
| MH 10 PRO 125 LC SM | | 125 | 12- | FD341 | FD075 |

## FD 362

mm: 75,6 x 41,1 | 8,2 | A | B

mm: 99,0 x 39,8 | 7,5 | A | B

G1054 | G1396

| BRAND MARCA | MODEL MODELO | C.C. | YEAR | FRONT | REAR |
|---|---|---|---|---|---|
| **SUZUKI** | | | | | |
| RM 85 / L | | 85 | 05- | FD204 | FD362 |

## FD 364

mm: 94,0 x 31,5 | 7,15 | A | A[1]

G1054 | G1396

| BRAND MARCA | MODEL MODELO | C.C. | YEAR | FRONT | REAR |
|---|---|---|---|---|---|
| **YAMAHA** | | | | | |
| YZ 125 | | 125 | 08- | FD364 | FD286 |
| WR 250 F 4T | | 250 | 07- | FD364 | FD286 |
| YZ 250 | | 250 | 08- | FD364 | FD286 |
| YZ 250 F | | 250 | 07-08 | FD364 | FD286 |
| YZ 250 F | | 250 | 09- | FD364 | FD286 |
| YZ 450 F | | 450 | 08-11 | FD364 | FD286 |
| YZ 450 F | | 450 | 12- | FD364 | FD286 |

## FD 409

mm: 98,5 x 33,1 | 7,6 | A | B

mm: 111,2 x 36,1 | 7,6 | A | B

G1054 | G1396

| BRAND MARCA | MODEL MODELO | C.C. | YEAR | FRONT | REAR |
|---|---|---|---|---|---|
| **AJP** | | | | | |
| PR 5 ENDURO 250 | | 250 | 11- | FD409 | FD093 |
| PR 5 SUPERMOTO 250 | | 250 | 11- | FD409 | FD093 |
| **GAS GAS** | | | | | |
| HALLEY 450 SM | | 450 | 09- | FD409 | FD093 |
| **HM** | | | | | |
| DERAPAGE 2T | | 125 | 11- | FD409 | FD286 |
| **HONDA** | | | | | |
| CRF 250 M | | 250 | 14- | FD409 | |
| **SCORPA** | | | | | |
| T-RIDE 125 F | | 125 | 10- | FD409 | FD270 |

## FD 428

mm: 36,0 x 42,0 | 6,0 | A | A

G1805

| BRAND MARCA | MODEL MODELO | C.C. | YEAR | FRONT | REAR |
|---|---|---|---|---|---|
| **BETA** | | | | | |
| EVO 125 | | 125 | 09-11 | FD223 | FD428 |
| EVO 125 MY12 | | 125 | 12- | FD223 | FD428 |
| EVO 200 | | 200 | 09-11 | FD223 | FD428 |
| EVO 200 MY12 | | 200 | 12- | FD223 | FD428 |
| EVO 250 2T | | 250 | 09-11 | FD223 | FD428 |
| EVO 250 2T MY12 | | 250 | 12- | FD223 | FD428 |
| EVO 250 4T | | 250 | 09-11 | FD223 | FD428 |
| EVO 250 4T MY12 | | 250 | 12- | FD223 | FD428 |
| EVO 290 2T | | 290 | 09- | FD223 | FD428 |
| EVO 300 2T MY12 | | 300 | 12- | FD223 | FD428 |
| EVO 300 4T | | 300 | 09- | FD223 | FD428 |
| EVO 300 4T MY12 | | 300 | 12- | FD223 | FD428 |

## FD 441

mm 41,0 x 42,3 | 7,3 | A | A

G1396

| BRAND MARCA | MODEL MODELO | C.C. | YEAR | FRONT | REAR |
|---|---|---|---|---|---|
| **HUSQVARNA** | | | | | |
| | 65 CR | 65 | 11- | FD265 | FD441 |
| | 85 TC 17/14 | 85 | 14- | FD458 | FD441 |
| | 85 TC 19/16 | 85 | 14- | FD458 | FD441 |
| **KTM** | | | | | |
| | 85 SX | 85 | 11-11 | FD265 | FD441 |
| | 85 SX 17/14 | 85 | 12- | FD458 | FD441 |
| | 85 SX 19/16 | 85 | 13- | FD458 | FD441 |
| | 150 SX 17/14 | 150 | 15- | FD458 | FD441 |
| | 150 SX 19/16 | 150 | 15- | FD458 | FD441 |
| | 250 FREERIDE | 250 | 13- | FD458 | FD441 |
| | 350 FREERIDE | 350 | 12- | FD458 | FD441 |

## FD 446

mm 59 x 38,5 | 7,5 | A | A

G1054 | G1805

| BRAND MARCA | MODEL MODELO | C.C. | YEAR | FRONT | REAR |
|---|---|---|---|---|---|
| **GAS GAS** | | | | | |
| | TXT PRO RACING 125 | 125 | 12-13 | FD446 | FD224 |
| | TXT PRO RACING 250 | 250 | 12-13 | FD446 | FD224 |
| | TXT PRO RACING 280 | 280 | 12-13 | FD446 | FD224 |
| **JOTAGAS** | | | | | |
| | JTG 300 JT | 300 | 12- | FD446 | FD224 |
| **MONTESA** | | | | | |
| | COTA 4 RT | 250 | 12- | FD446 | FD224 |
| **SHERCO** | | | | | |
| | ST 8.0 | 80 | 13-14 | FD446 | FD224 |
| | ST 1.25 | 125 | 13-14 | FD446 | FD224 |
| | ST 2.5 | 250 | 13-14 | FD446 | FD224 |
| | ST 2.9 | 290 | 12-14 | FD446 | FD224 |
| | ST 3.0 | 300 | 13- | FD446 | FD224 |

## FD 450

mm 69,5 x 45,2 | 8,8 | A | A

G1054

| BRAND MARCA | MODEL MODELO | C.C. | YEAR | FRONT | REAR |
|---|---|---|---|---|---|
| **HUSQVARNA** | | | | | |
| | 401 SVARTPILEN | 390 | 15- | FD450 | FD |

## FD 456

mm 66,9 x 36,0 | 9,0 | A | A[1]

G1054

| BRAND MARCA | MODEL MODELO | C.C. | YEAR | FRONT | REAR |
|---|---|---|---|---|---|
| **BETA** | | | | | |
| | RR 125 4T SM | 125 | 06- | FD162 | FD456 |
| | RR MOTARD | 125 | 08- | FD162 | FD456 |
| | 200 ALP | 200 | 08- | FD162 | FD456 |
| | 250 RR 2T ENDURO | 250 | 12- | FD164 | FD456 |
| | 250 RR 4T | 250 | 05- | FD164 | FD456 |
| | 300 RR 2T ENDURO | 300 | 13- | FD164 | FD456 |
| | XTRAINER | 300 | 15- | FD164 | FD456 |
| | 350 RR 4T | 350 | 11-12 | FD164 | FD456 |
| | 350 RR 4T ENDURO | 350 | 13- | FD164 | FD456 |
| | 350 RR efi | 350 | 15- | FD164 | FD456 |
| | MOTARD 4.0 | 350 | 07- | FD337 | FD456 |
| | 390 RR 4T | 390 | 15- | FD164 | FD456 |
| | 400 RR 4T | 400 | 05-12 | FD164 | FD456 |
| | 400 RR 4T ENDURO | 400 | 13- | FD164 | FD456 |
| | 430 RR 4T | 430 | 15- | FD164 | FD456 |
| | 450 RR 4T | 450 | 05-12 | FD164 | FD456 |
| | 450 RR 4T ENDURO | 450 | 13- | FD164 | FD456 |
| | 480 RR 4T | 480 | 15- | FD164 | FD456 |
| | 498 RR 4T | 498 | 12-12 | FD164 | FD456 |
| | 498 RR 4T ENDURO | 498 | 13- | FD164 | FD456 |
| | 525 RR 4T | 525 | 05- | FD164 | FD456 |

## FD 458

mm 59 x 38,5 | 7,3 | A | A

G1054 | G1805 | G1396

| BRAND MARCA | MODEL MODELO | C.C. | YEAR | FRONT | REAR |
|---|---|---|---|---|---|
| **HUSQVARNA** | | | | | |
| | 85 TC 17/14 | 85 | 14- | FD458 | FD441 |
| | 85 TC 19/16 | 85 | 14- | FD458 | FD441 |
| **KTM** | | | | | |
| | 85 SX 17/14 | 85 | 12- | FD458 | FD441 |
| | 85 SX 19/16 | 85 | 13- | FD458 | FD441 |
| | 150 SX 17/14 | 150 | 15- | FD458 | FD441 |
| | 150 SX 19/16 | 150 | 15- | FD458 | FD441 |
| | 250 FREERIDE | 250 | 13- | FD458 | FD441 |
| | 350 FREERIDE | 350 | 12- | FD458 | FD441 |

## FD 460

mm 56 x 31,8 | 5,0 | A | A

G1054 | G1805

| BRAND MARCA | MODEL MODELO | C.C. | YEAR | FRONT | REAR |
|---|---|---|---|---|---|
| **GAS GAS** | | | | | |
| | TXT PRO RACING 125 | 125 | 14- | FD460 | FD224 |
| | TXT PRO RACING 250 | 250 | 14- | FD460 | FD224 |
| | TXT PRO RACING 280 | 280 | 14- | FD460 | FD224 |
| | TXT PRO RACING 300 | 300 | 14- | FD460 | FD224 |
| **MONTESA** | | | | | |
| | COTA 260 4RT RACE REPLICA | 260 | 15- | FD460 | FD224 |
| **OSSA** | | | | | |
| | TR 300i FACTORY R | 300 | 15- | FD460 | FD224 |
| **VERTIGO** | | | | | |
| | COMBAT CAMO | 300 | 15- | FD460 | FD224 |
| | COMBAT ICE HELL | 300 | 15- | FD460 | FD224 |



For other models years previous to 1990 visit **www.galferonline.es** - Para otros modelos anteriores al año 1990 visitar **www.galferonline.es**
For consult TÜV (ABE) type approvals visit **www.galfermoto.com --> DOWNLOAD --> TÜV CERTIFICATIONS** - Para consultar las homologaciones TÜV (ABE) visitar **www.galfermoto.com --> DESCARGAS --> CERTIFICACIONES TÜV**

## DF 003 W

øext. 220 mm øint. 122 — 4,0 — OE

| BRAND MARCA | MODEL MODELO | C.C. | YEAR | FRONT | REAR |
|---|---|---|---|---|---|
| **HONDA** | | | | | |
| CR 125 ENDURO | | 125 | 91- | DF001 | DF003 |
| CR 125 R | | 125 | 94-94 | DF017 | DF003 |
| CR 125 R | | 125 | 95-97 | DF014 | DF003 |
| CR 250 R | | 250 | 90-91 | DF001 | DF003 |
| CR 250 R | | 250 | 92-94 | DF017 | DF003 |
| CR 250 R | | 250 | 95-96 | DF014 | DF003 |
| CR 500 ENDURO | | 500 | 91- | DF001 | DF003 |
| CR 500 R | | 500 | 90-92 | DF001 | DF003 |
| CR 500 R | | 500 | 92-94 | DF017 | DF003 |
| CR 500 R | | 500 | 95-00 | DF014 | DF003 |

## DF 010 W

øext. 220 mm øint. 105 — 4,0 — OE

| BRAND MARCA | MODEL MODELO | C.C. | YEAR | FRONT | REAR |
|---|---|---|---|---|---|
| **HM** | | | | | |
| CRM F 125 X | | 125 | 08- | | DF010 |

## DF 011 W

øext. 220 mm øint. 122 — 4,0 — OE

| BRAND MARCA | MODEL MODELO | C.C. | YEAR | FRONT | REAR |
|---|---|---|---|---|---|
| **HONDA** | | | | | |
| CR 125 R | | 125 | 92-93 | DF017 | DF011 |

## DF 014 W

øext. 240 mm øint. 101 — 4,0 — OE

## DF 014 FLW

øext. 240 mm øint. 101 — 3,0 — OE

## DF 014 WS

øext. 270 mm øint. 101 — 3,0 — SP001 SP045

## DF 014 RWS

øext. 270 mm øint. 101 — 3,0 — SP001 SP045

## DF 014 FLS

øext. 270 mm øint. 101 — 3,0 — SP001 SP045

## DF 014 FRS

øext. 270 mm øint. 101 — 3,0 — SP001 SP045

| BRAND MARCA | MODEL MODELO | C.C. | YEAR | FRONT | REAR |
|---|---|---|---|---|---|
| **HM** | | | | | |
| CRE 125 R | | 125 | 03- | DF014 | DF069 |
| CRM 125 R | | 125 | 07- | DF014 | DF069 |
| CRE 250 F | | 250 | 03- | DF014 | DF069 |
| CRE 250 R | | 250 | 03- | DF014 | DF069 |
| CRE 250 X | | 250 | 09- | DF014 | DF069 |
| CRF 250 R | | 250 | 09- | DF014 | DF069 |
| CRM 250 X | | 250 | 07- | DF014 | DF069 |
| CRE 300 X | | 300 | 09- | DF014 | DF069 |
| CRE 450 F | | 450 | 03- | DF014 | DF069 |
| CRE 450 R | | 450 | 09- | DF014 | DF069 |
| CRE 450 X | | 450 | 09- | DF014 | DF069 |
| CRF 450 R | | 450 | 09- | DF014 | DF069 |
| CRM F 450 R | | 450 | 09- | DF014 | DF069 |
| CRM F 450 X | | 450 | 09- | DF014 | DF069 |
| CRE F 490 X | | 490 | 07- | DF014 | DF069 |
| CRM F 490 X | | 490 | 07- | DF014 | DF069 |
| CRE 500 X | | 500 | 09- | DF014 | DF069 |
| **HONDA** | | | | | |
| CR 125 R | | 125 | 95-97 | DF014 | DF003 |
| CR 125 R | | 125 | 98-01 | DF014 | DF039 |
| CR 125 R | | 125 | 02-04 | DF014 | DF069 |
| CR 125 R | | 125 | 05-07 | DF014 | DF069 |
| CR 250 R | | 250 | 95-96 | DF014 | DF003 |
| CR 250 R | | 250 | 97-01 | DF014 | DF039 |
| CR 250 R | | 250 | 02-04 | DF014 | DF069 |
| CR 250 R | | 250 | 05-07 | DF014 | DF069 |
| CRF 250 R | | 250 | 04-07 | DF014 | DF069 |
| CRF 250 R | | 250 | 08-14 | DF014 | DF069 |
| CRF 250 X | | 250 | 04- | DF014 | DF069 |
| CRF 250 XR LD | | 250 | 13- | DF014 | DF069 |
| CRF 450 F/R | | 450 | 01-03 | DF014 | DF039 |
| CRF 450 F/R | | 450 | 04-07 | DF014 | DF069 |
| CRF 450 F/R | | 450 | 08-14 | DF014 | DF069 |
| CRF 450 X | | 450 | 04- | DF014 | DF069 |
| CRF 450 XR LD | | 450 | 13- | DF014 | DF069 |
| CR 500 R | | 500 | 95-00 | DF014 | DF003 |

## DF 017 W

øext. 240 mm øint. 118 — 3,0 — OE

| BRAND MARCA | MODEL MODELO | C.C. | YEAR | FRONT | REAR |
|---|---|---|---|---|---|
| **HONDA** | | | | | |
| CR 125 R | | 125 | 92-93 | DF017 | DF011 |
| CR 125 R | | 125 | 94-94 | DF017 | DF003 |
| CRF 150 F | | 150 | 03-06 | DF017 | - |
| CRF 230 F | | 230 | 04- | DF017 | - |
| CRF 230 L | | 230 | 08- | DF017 | DF048 |
| CRF 230 M | | 230 | 09- | DF017 | DF048 |
| CR 250 ENDURO | | 250 | 91- | DF017 | DF048 |
| CR 250 R | | 250 | 92-94 | DF017 | DF003 |
| CRM 250 R | | 250 | 92- | DF017 | |
| XR 250 L, R | | 250 | 91-93 | DF017 | DF048 |
| XR 250 R | | 250 | 94-02 | DF017 | DF048 |
| XR 250 R | | 250 | 03- | DF017 | DF048 |
| XR 400 MOTARD (DF017SM) | | 400 | 05- | DF017 | DF048 |
| XR 400 R | | 400 | 96- | DF017 | DF048 |
| CR 500 R | | 500 | 92-94 | DF017 | DF003 |
| XR 600 R | | 600 | 91-92 | DF017 | DF048 |
| XR 600 R | | 600 | 93- | DF017 | DF048 |
| XR 650 R | | 650 | 00- | DF017 | DF060 |

## DF 039 W

øext. 240 mm øint. 122 — 4,0 — OE

| BRAND MARCA | MODEL MODELO | C.C. | YEAR | FRONT | REAR |
|---|---|---|---|---|---|
| **HONDA** | | | | | |
| CR 125 R | | 125 | 98-01 | DF014 | DF039 |
| CR 250 R | | 250 | 97-01 | DF014 | DF039 |
| CRF 450 F/R | | 450 | 01-03 | DF014 | DF039 |

## DF 047 W

øext. 190 mm øint. 80,5 — 3,0 — OE

| BRAND MARCA | MODEL MODELO | C.C. | YEAR | FRONT | REAR |
|---|---|---|---|---|---|
| **HM** | | | | | |
| CRF 150 R / R2 | | 150 | 08- | DF050 | DF047 |
| **HONDA** | | | | | |
| CR 80 R | | 80 | 90-96 | | DF047 |
| CR 80 R | | 80 | 97-02 | DF050 | DF047 |
| CR 85 R | | 85 | 03-05 | DF050 | DF047 |
| CR 85 R | | 85 | 06- | DF050 | DF047 |
| CRF 150 R | | 150 | 07- | DF050 | DF047 |

## DF 048 W

øext. 220 mm øint. 105 — 4,2 — OE

| BRAND MARCA | MODEL MODELO | C.C. | YEAR | FRONT | REAR |
|---|---|---|---|---|---|
| **HONDA** | | | | | |
| CRF 230 L | | 230 | 08- | DF017 | DF048 |
| CRF 230 M | | 230 | 09- | DF017 | DF048 |
| CR 250 ENDURO | | 250 | 91- | DF017 | DF048 |
| XR 250 L, R | | 250 | 91-93 | DF017 | DF048 |
| XR 250 MOTARD | | 250 | 03- | | DF048 |
| XR 250 R | | 250 | 94-02 | DF017 | DF048 |
| XR 250 R | | 250 | 03- | DF017 | DF048 |
| XR 400 MOTARD (DF017SM) | | 400 | 05- | DF017 | DF048 |
| XR 400 R | | 400 | 96- | DF017 | DF048 |
| XR 600 R | | 600 | 91-92 | DF017 | DF048 |
| XR 600 R | | 600 | 93- | DF017 | DF048 |

## DF 050 W

øext. 220 mm øint. 89 — 3,0 — OE

| BRAND MARCA | MODEL MODELO | C.C. | YEAR | FRONT | REAR |
|---|---|---|---|---|---|
| **HM** | | | | | |
| CRF 150 R / R2 | | 150 | 08- | DF050 | DF047 |
| **HONDA** | | | | | |
| CR 80 R | | 80 | 97-02 | DF050 | DF047 |
| CR 85 R | | 85 | 03-05 | DF050 | DF047 |
| CR 85 R | | 85 | 06- | DF050 | DF047 |
| CRF 150 R | | 150 | 07- | DF050 | DF047 |

## DF 060 W

øext. 240 mm øint. 105 — 4,0 — OE

| BRAND MARCA | MODEL MODELO | C.C. | YEAR | FRONT | REAR |
|---|---|---|---|---|---|
| **HONDA** | | | | | |
| XR 650 R | | 650 | 00- | DF017 | DF060 |

**DF 069 W** — øext. 240 mm, øint. 122 — 3,5 — OE
**DF 069 WLL** — øext. 240 mm, øint. 122 — 3,5
**DF 069 RW** — øext. 240 mm, øint. 122 — 3,5
**DF 069 FLW** — øext. 240 mm, øint. 122 — 4,0 — OE

| BRAND MARCA | MODEL MODELO | C.C. | YEAR | FRONT | REAR |
|---|---|---|---|---|---|
| **HM** | | | | | |
| | CR 125 MOTARD | 125 | 03-06 | | DF069 |
| | CRE 125 R | 125 | 03- | DF014 | DF069 |
| | CRM 125 R | 125 | 07- | DF014 | DF069 |
| | EASY 230 F ENDURO | 230 | 04- | | DF069 |
| | EASY 230 F MOTARD | 230 | 04- | | DF069 |
| | EASY 230 F TRAIL ID | 230 | 04- | | DF069 |
| | CR 250 MOTARD | 250 | 03- | | DF069 |
| | CRE 250 F | 250 | 03- | DF014 | DF069 |
| | CRE 250 R | 250 | 03- | DF014 | DF069 |
| | CRE 250 X | 250 | 09- | DF014 | DF069 |
| | CRF 250 MOTARD | 250 | 03-06 | | DF069 |
| | CRF 250 R | 250 | 09- | DF014 | DF069 |
| | CRM 250 X | 250 | 07- | DF014 | DF069 |
| | CRE 300 X | 300 | 09- | DF014 | DF069 |
| | CRE 450 F | 450 | 03- | DF014 | DF069 |
| | CRE 450 R | 450 | 09- | DF014 | DF069 |
| | CRE 450 X | 450 | 09- | DF014 | DF069 |
| | CRF 450 MOTARD | 450 | 03- | | DF069 |
| | CRF 450 R | 450 | 09- | DF014 | DF069 |
| | CRM F 450 R | 450 | 09- | DF014 | DF069 |
| | CRM F 450 X | 450 | 09- | DF014 | DF069 |
| | CRE F 490 X | 490 | 07- | DF014 | DF069 |
| | CRM F 490 X | 490 | 07- | DF014 | DF069 |
| | CRE 500 X | 500 | 09- | DF014 | DF069 |
| **HONDA** | | | | | |
| | CR 125 R | 125 | 02-04 | DF014 | DF069 |
| | CR 125 R | 125 | 05-07 | DF014 | DF069 |
| | CR 250 R | 250 | 02-04 | DF014 | DF069 |
| | CR 250 R | 250 | 05-07 | DF014 | DF069 |
| | CRF 250 R | 250 | 04-07 | DF014 | DF069 |
| | CRF 250 R | 250 | 08-14 | DF014 | DF069 |
| | CRF 250 R | 250 | 15- | DF082 | DF069 |
| | CRF 250 X | 250 | 04- | DF014 | DF069 |
| | CRF 250 XR LD | 250 | 13- | DF014 | DF069 |
| | CRF 450 F/R | 450 | 04-07 | DF014 | DF069 |
| | CRF 450 F/R | 450 | 08-14 | DF014 | DF069 |
| | CRF 450 R | 450 | 15- | DF082 | DF069 |
| | CRF 450 X | 450 | 04- | DF014 | DF069 |
| | CRF 450 XR LD | 450 | 13- | DF014 | DF069 |

**DF 082 W** — øext. 260 mm, øint. 101 — 3,0 — OE
**DF 082 FLW** — øext. 260 mm, øint. 101 — 3,0 — OE
**DF 082 WS** — øext. 270 mm, øint. 101 — 3,0 — SP045 — OE

| BRAND MARCA | MODEL MODELO | C.C. | YEAR | FRONT | REAR |
|---|---|---|---|---|---|
| **HONDA** | | | | | |
| | CRF 250 R | 250 | 15- | DF082 | DF069 |
| | CRF 450 R | 450 | 15- | DF082 | DF069 |

**DF 150 FLW** — øext. 250 mm, øint. 100 — 3,0 — OE
**DF 150 FLS** — øext. 270 mm, øint. 100 — 3,0 — SP005
**DF 150 FRS** — øext. 270 mm, øint. 100 — 3,0 — SP005

| BRAND MARCA | MODEL MODELO | C.C. | YEAR | FRONT | REAR |
|---|---|---|---|---|---|
| **KAWASAKI** | | | | | |
| | KL 125 ENDURO | 125 | 03- | DF150 | DF179 |
| | KX 125 | 125 | 95-02 | DF150 | DF151 |
| | D 250 TRACKER | 250 | 03- | DF150 | DF152 |
| | KDX 250 R | 250 | 92- | DF150 | DF152 |
| | KLX 250 R | 250 | 92- | DF150 | |
| | KLX 250 S | 250 | 05-07 | DF150 | DF152 |
| | KX 250 | 250 | 94-94 | DF150 | DF151 |
| | KX 250 | 250 | 95-02 | DF150 | DF151 |
| | KXE 250 F | 250 | 03- | DF150 | |
| | KLX 300 R | 300 | 96- | DF150 | DF152 |
| | KLX 400 R | 400 | 03- | DF150 | DF151 |
| | KX 500 | 500 | 94-94 | DF150 | DF151 |
| | KX 500 | 500 | 95- | DF150 | DF151 |
| | KLX 650 R | 650 | 93- | DF150 | |
| **SUZUKI** | | | | | |
| | DR 250 SB | 250 | 03- | DF150 | DF152 |

**DF 151 W** — øext. 220 mm, øint. 101 — 4,0 — OE

| BRAND MARCA | MODEL MODELO | C.C. | YEAR | FRONT | REAR |
|---|---|---|---|---|---|
| **KAWASAKI** | | | | | |
| | KX 125 | 125 | 95-02 | DF150 | DF151 |
| | KX 250 | 250 | 94-94 | DF150 | DF151 |
| | KX 250 | 250 | 95-02 | DF150 | DF151 |
| | KLX 400 R | 400 | 03- | DF150 | DF151 |
| | KX 500 | 500 | 94-94 | DF150 | DF151 |
| | KX 500 | 500 | 95- | DF150 | DF151 |

**DF 152 W** — øext. 220 mm, øint. 100 — 4,0 — OE

| BRAND MARCA | MODEL MODELO | C.C. | YEAR | FRONT | REAR |
|---|---|---|---|---|---|
| **KAWASAKI** | | | | | |
| | KDX 220 | 220 | 99- | DF164 | DF152 |
| | D 250 TRACKER | 250 | 03- | DF150 | DF152 |
| | KDX 250 R | 250 | 92- | DF150 | DF152 |
| | KLX 250 D TRACKER | 250 | 00- | | DF152 |
| | KLX 250 S | 250 | 05-07 | DF150 | DF152 |
| | KLX 300 R | 300 | 96- | DF150 | DF152 |
| **SUZUKI** | | | | | |
| | DR 250 SB | 250 | 03- | DF150 | DF152 |

**DF 165 W** — øext. 184 mm, øint. 84 — 3,0 — OE

| BRAND MARCA | MODEL MODELO | C.C. | YEAR | FRONT | REAR |
|---|---|---|---|---|---|
| **KAWASAKI** | | | | | |
| | KX 80 | 80 | 93-96 | DF171 | DF165 |
| | KX 80 R7 KX 80-II | 80 | 97-99 | DF171 | DF165 |
| | KX 85 | 85 | 00-03 | DF171 | DF165 |
| | KX 85 | 85 | 03- | DF171 | DF165 |
| | KX 100 | 100 | 97- | DF171 | DF165 |
| **SUZUKI** | | | | | |
| | RM 80 | 80 | 90-95 | | DF165 |
| | RM 80 | 80 | 96-02 | DF353 | DF165 |
| | RM 85 / L | 85 | 03-04 | DF353 | DF165 |

**DF 171 W** — øext. 220 mm, øint. 96 — 3,0 — OE

| BRAND MARCA | MODEL MODELO | C.C. | YEAR | FRONT | REAR |
|---|---|---|---|---|---|
| **KAWASAKI** | | | | | |
| | KX 80 | 80 | 91-92 | DF171 | |
| | KX 80 | 80 | 93-96 | DF171 | DF165 |
| | KX 80 R7 KX 80-II | 80 | 97-99 | DF171 | DF165 |
| | KX 85 | 85 | 00-03 | DF171 | DF165 |
| | KX 85 | 85 | 03- | DF171 | DF165 |
| | KX 100 | 100 | 97- | DF171 | DF165 |

**DF 179 W** — øext. 240 mm, øint. 116 — 4,0 — OE
**DF 179 WLL** — øext. 240 mm, øint. 116 — 4,0
**DF 179 RW** — øext. 240 mm, øint. 116 — 4,0

| BRAND MARCA | MODEL MODELO | C.C. | YEAR | FRONT | REAR |
|---|---|---|---|---|---|
| **KAWASAKI** | | | | | |
| | KL 125 ENDURO | 125 | 03- | DF150 | DF179 |
| | KX 125 | 125 | 03-03 | DF182 | DF179 |
| | KX 125 | 125 | 04-05 | DF182 | DF179 |
| | KX 125 | 125 | 06- | DF200 | DF179 |
| | KX 250 | 250 | 03-03 | DF182 | DF179 |
| | KX 250 | 250 | 04-05 | DF182 | DF179 |



**OE:** Original equipment (original replacement disc) - **OE:** Equipo original (disco de remplazo del original) For other models years previous to 1990 visit **www.galferonline.es** - Para otros modelos anteriores al año 1990 visitar **www.galferonline.es**
For consult TÜV (ABE) type approvals visit **www.galfermoto.com --> DOWNALOAD --> TÜV CERTIFICATIONS** - Para consultar las homologaciones TÜV (ABE) visitar **www.galfermoto.com --> DESCARGAS --> CERTIFICACIONES TÜV**

| | | | | |
|---|---|---|---|---|
| KX 250 | 250 | 06- | DF200 | DF179 |
| KX 250 F | 250 | 04-05 | DF182 | DF179 |
| KX 250 F | 250 | 06-10 | DF200 | DF179 |
| KX 250 F | 250 | 11-14 | DF200 | DF179 |
| KX 250 F | 250 | 15- | DF208 | DF179 |
| KLX 450 R | 450 | 07- | DF200 | DF179 |
| KX 450 F | 450 | 06-10 | DF200 | DF179 |
| KX 450 F | 450 | 11-14 | DF200 | DF179 |
| KX 450 F | 450 | 15- | DF208 | DF179 |
| KXE 450 F | 450 | 06- | DF200 | DF179 |
| **SUZUKI** | | | | |
| RM 250 Z | 250 | 04-06 | DF182 | DF179 |

**DF 182 FLW** — øext. 250 mm 100 øint. — 3,0 — OE

**DF 182 FLS** — øext. 270 mm 100 øint. — 3,0 — SP005

**DF 182 FRS** — øext. 270 mm 100 øint. — 3,0 — SP005

| BRAND MARCA | MODEL MODELO | C.C. | YEAR | FRONT | REAR |
|---|---|---|---|---|---|
| **KAWASAKI** | | | | | |
| KX 125 | | 125 | 03-03 | DF182 | DF179 |
| KX 125 | | 125 | 04-05 | DF182 | DF179 |
| KX 250 | | 250 | 03-03 | DF182 | DF179 |
| KX 250 | | 250 | 04-05 | DF182 | DF179 |
| KX 250 F | | 250 | 04-05 | DF182 | DF179 |
| **SUZUKI** | | | | | |
| RM 250 Z | | 250 | 04-06 | DF182 | DF179 |

**DF 195 W** — øext. 180 mm 79 øint. — 3,0 — OE

| BRAND MARCA | MODEL MODELO | C.C. | YEAR | FRONT | REAR |
|---|---|---|---|---|---|
| **KAWASAKI** | | | | | |
| KX 65 | | 65 | 00-04 | DF195 | DF195 |
| KX 65 | | 65 | 05- | DF195 | DF195 |
| **SUZUKI** | | | | | |
| RM 65 | | 65 | 03- | DF195 | DF195 |

**DF 200 FLW** — øext. 250 mm 109 øint. — 3,0 — OE

**DF 200 WS** — øext. 270 mm 109 øint. — 3,0 — SP005

**DF 200 RWS** — øext. 270 mm 109 øint. — 3,0 — SP005

**DF 200 FLS** — øext. 270 mm 109 øint. — 3,0 — SP005

**DF 200 FRS** — øext. 270 mm 109 øint. — 3,0 — SP005

| BRAND MARCA | MODEL MODELO | C.C. | YEAR | FRONT | REAR |
|---|---|---|---|---|---|
| **KAWASAKI** | | | | | |
| KX 125 | | 125 | 06- | DF200 | DF179 |
| KX 250 | | 250 | 06- | DF200 | DF179 |
| KX 250 F | | 250 | 06-10 | DF200 | DF179 |
| KX 250 F | | 250 | 11-14 | DF200 | DF179 |
| KLX 450 R | | 450 | 07- | DF200 | DF179 |
| KX 450 F | | 450 | 06-10 | DF200 | DF179 |
| KX 450 F | | 450 | 11-14 | DF200 | DF179 |
| KXE 450 F | | 450 | 06- | DF200 | DF179 |

**DF 201 W** — øext. 250 mm 100 øint. — 3,5 — OE

| BRAND MARCA | MODEL MODELO | C.C. | YEAR | FRONT | REAR |
|---|---|---|---|---|---|
| **KAWASAKI** | | | | | |
| KLX 250 S | | 250 | 08- | DF201 | DF202 |

**DF 202 W** — øext. 240 mm 100 øint. — 4,5 — OE

| BRAND MARCA | MODEL MODELO | C.C. | YEAR | FRONT | REAR |
|---|---|---|---|---|---|
| **KAWASAKI** | | | | | |
| KLX 250 S | | 250 | 08- | DF201 | DF202 |

**DF 208 FLW** — øext. 270 mm 109 øint. — 3,0 — OE

| BRAND MARCA | MODEL MODELO | C.C. | YEAR | FRONT | REAR |
|---|---|---|---|---|---|
| **KAWASAKI** | | | | | |
| KX 250 F | | 250 | 15- | DF208 | DF179 |
| KX 450 F | | 450 | 15- | DF208 | DF179 |

**DF 301 FLW** — øext. 250 mm 118 øint. — 3,0 — OE

**DF 301 WS** — øext. 270 mm 118 øint. — 3,0 — SP004

**DF 301 RWS** — øext. 270 mm 118 øint. — 3,0 — SP004

**DF 301 FLS** — øext. 270 mm 118 øint. — 3,0 — SP004

**DF 301 FRS** — øext. 270 mm 118 øint. — 3,0 — SP004

| BRAND MARCA | MODEL MODELO | C.C. | YEAR | FRONT | REAR |
|---|---|---|---|---|---|
| **RIEJU** | | | | | |
| MARATHON 250 | | 250 | 09- | DF301 | DF479 |
| MRX 250 | | 250 | 06- | DF301 | DF479 |
| MARATHON 450 | | 450 | 09- | DF301 | DF479 |
| MRX 450 | | 450 | 05- | DF301 | DF479 |
| **SUZUKI** | | | | | |
| RM 125 | | 125 | 96-98 | DF301 | DF302 |
| RM 125 | | 125 | 99-03 | DF301 | DF338 |
| RM 125 | | 125 | 04-05 | DF301 | DF338 |
| RM 125 | | 125 | 06- | DF301 | DF354 |
| DR-Z 250 E | | 250 | 01- | DF301 | |
| RM 250 | | 250 | 93-95 | DF301 | DF302 |
| RM 250 | | 250 | 96-98 | DF301 | DF302 |
| RM 250 | | 250 | 99-03 | DF301 | DF338 |
| RM 250 | | 250 | 04-05 | DF301 | DF338 |
| RM 250 | | 250 | 06- | DF301 | DF354 |
| RMX 250 | | 250 | 95- | DF301 | DF302 |
| RMX S | | 250 | 92-94 | DF301 | DF302 |
| DR-Z 400 E | | 400 | 00- | DF301 | DF302 |
| DR-Z 400 S | | 400 | 00- | DF301 | DF302 |
| **YAMAHA** | | | | | |
| YZ 125 | | 125 | 08- | DF301 | DF499 |
| YZ 125, WR | | 125 | 01-02 | DF301 | DF479 |
| YZ 125, WR | | 125 | 03-03 | DF301 | DF499 |
| YZ 125, WR | | 125 | 04-07 | DF301 | DF499 |
| WR 250 F 4T | | 250 | 03-06 | DF301 | DF499 |
| WR 250 F 4T | | 250 | 07- | DF301 | DF499 |
| YZ 250 | | 250 | 08- | DF301 | DF499 |
| YZ 250 F | | 250 | 03-06 | DF301 | DF499 |
| YZ 250 F | | 250 | 07-08 | DF301 | DF499 |
| YZ 250 F | | 250 | 09- | DF301 | DF499 |
| YZ 250 F, WR F 4T | | 250 | 01-02 | DF301 | DF479 |
| YZ 250 F, WR F 4T | | 250 | 03-06 | DF301 | DF499 |
| YZ 250, WR | | 250 | 01-02 | DF301 | DF479 |
| WR 426 F | | 425 | 00-01 | DF301 | DF479 |
| WR 426 F | | 425 | 02-02 | DF301 | DF499 |
| YZ 426 F | | 425 | 00-01 | DF301 | DF479 |
| YZ 426 F | | 425 | 02-02 | DF301 | DF499 |
| WR 450 F | | 450 | 03-11 | DF301 | DF499 |
| WR 450 F | | 450 | 12- | DF301 | DF499 |
| YZ 450 F | | 450 | 03-07 | DF301 | DF499 |
| YZ 450 F | | 450 | 08-11 | DF301 | DF499 |
| YZ 450 F | | 450 | 12- | DF301 | DF499 |

## DF 302 W

øext. 220 mm øint. 118 — 4,0 — OE

| BRAND MARCA | MODEL MODELO | C.C. | YEAR | FRONT | REAR |
|---|---|---|---|---|---|
| SUZUKI | | | | | |
| RM 125 | | 125 | 96-98 | DF301 | DF302 |
| RM 250 | | 250 | 93-95 | DF301 | DF302 |
| RM 250 | | 250 | 96-98 | DF301 | DF302 |
| RMX 250 | | 250 | 95- | DF301 | DF302 |
| RMX S | | 250 | 92-94 | DF301 | DF302 |
| DR-Z 400 E | | 400 | 00- | DF301 | DF302 |
| DR-Z 400 S | | 400 | 00- | DF301 | DF302 |

## DF 306 W

øext. 250 mm øint. 121 — 3,5 — OE

| BRAND MARCA | MODEL MODELO | C.C. | YEAR | FRONT | REAR |
|---|---|---|---|---|---|
| SUZUKI | | | | | |
| DR 250 S | | 250 | 90-00 | DF306 | |
| DR 350 S | | 350 | 90-92 | DF306 | |
| DR 350 S, SH | | 350 | 93-93 | DF306 | |
| DR 350 SE | | 350 | 94- | DF306 | |

## DF 327 FLW

øext. 290 mm øint. 121 — 4,0 — OE

| BRAND MARCA | MODEL MODELO | C.C. | YEAR | FRONT | REAR |
|---|---|---|---|---|---|
| SUZUKI | | | | | |
| DR 650 | | 650 | 96- | DF327 | DF328 |

## DF 328 W

øext. 240 mm øint. 118 — 4,0 — OE

| BRAND MARCA | MODEL MODELO | C.C. | YEAR | FRONT | REAR |
|---|---|---|---|---|---|
| SUZUKI | | | | | |
| DR 650 | | 650 | 96- | DF327 | DF328 |

## DF 329 W

øext. 200 mm øint. 84 — 3,5 — OE

| BRAND MARCA | MODEL MODELO | C.C. | YEAR | FRONT | REAR |
|---|---|---|---|---|---|
| SUZUKI | | | | | |
| RM 85 / L | | 85 | 05- | DF489 | DF329 |

## DF 338 W

øext. 240 mm øint. 118 — 3,5 — OE

| BRAND MARCA | MODEL MODELO | C.C. | YEAR | FRONT | REAR |
|---|---|---|---|---|---|
| CANNONDALE | | | | | |
| XC 400 | | 400 | 01- | DF338 | DF718 |
| E 440 | | 440 | 01- | DF338 | DF718 |
| X 440 | | 440 | 01- | DF338 | DF718 |
| X 440 S | | 440 | 01- | DF338 | DF718 |
| SUZUKI | | | | | |
| RM 125 | | 125 | 99-03 | DF301 | DF338 |
| RM 125 | | 125 | 04-05 | DF301 | DF338 |
| RM 250 | | 250 | 99-03 | DF301 | DF338 |
| RM 250 | | 250 | 04-05 | DF301 | DF338 |
| DR-Z 400 S SUPER MOTARD | | 400 | 05- | | DF338 |

## DF 349 FLW

øext. 250 mm øint. 118 — 3,0 — OE

## DF 349 WS

øext. 270 mm øint. 118 — 3,0 — SP005

## DF 349 RWS

øext. 270 mm øint. 118 — 3,0 — SP005

## DF 349 FLS

øext. 270 mm øint. 118 — 3,0 — SP005

## DF 349 FRS

øext. 270 mm øint. 118 — 3,0 — SP005

| BRAND MARCA | MODEL MODELO | C.C. | YEAR | FRONT | REAR |
|---|---|---|---|---|---|
| SUZUKI | | | | | |
| RM 250 Z | | 250 | 07-12 | DF349 | DF350 |
| RM 250 Z | | 250 | 13- | DF349 | DF350 |
| RM 450 Z | | 450 | 05- | DF349 | DF350 |
| RMX 450 Z | | 450 | 10- | DF349 | DF350 |

## DF 350 W

øext. 240 mm øint. 122 — 4,0 — OE

## DF 350 WLL

øext. 240 mm øint. 122 — 4,0

## DF 350 RW

øext. 240 mm øint. 122 — 4,0

| BRAND MARCA | MODEL MODELO | C.C. | YEAR | FRONT | REAR |
|---|---|---|---|---|---|
| SUZUKI | | | | | |
| RM 250 Z | | 250 | 07-12 | DF349 | DF350 |
| RM 250 Z | | 250 | 13- | DF349 | DF350 |
| RM 450 Z | | 450 | 05- | DF349 | DF350 |
| RMX 450 Z | | 450 | 10- | DF349 | DF350 |

## DF 353 W

øext. 200 mm øint. 100,5 — 3,5 — OE

| BRAND MARCA | MODEL MODELO | C.C. | YEAR | FRONT | REAR |
|---|---|---|---|---|---|
| SUZUKI | | | | | |
| RM 80 | | 80 | 96-02 | DF353 | DF165 |
| RM 85 / L | | 85 | 03-04 | DF353 | DF165 |

## DF 354 W

øext. 240 mm øint. 118 — 4,0 — OE

| BRAND MARCA | MODEL MODELO | C.C. | YEAR | FRONT | REAR |
|---|---|---|---|---|---|
| SUZUKI | | | | | |
| RM 125 | | 125 | 06- | DF301 | DF354 |
| RM 250 | | 250 | 06- | DF301 | DF354 |

## DF 450 W

øext. 245 mm øint. 86 — 3,0 — OE

| BRAND MARCA | MODEL MODELO | C.C. | YEAR | FRONT | REAR |
|---|---|---|---|---|---|
| YAMAHA | | | | | |
| WR 125 | | 125 | 91- | DF450 | DF451 |
| WR 250 | | 250 | 91- | DF450 | DF451 |
| YZ 250, W, RALLY | | 250 | 90-91 | DF450 | DF451 |
| YZ 360, RALLY | | 360 | 90- | DF450 | DF451 |

## DF 451 W

øext. 220 mm øint. 115 — 4,0 — OE

| BRAND MARCA | MODEL MODELO | C.C. | YEAR | FRONT | REAR |
|---|---|---|---|---|---|
| YAMAHA | | | | | |
| WR 125 | | 125 | 91- | DF450 | DF451 |
| YZ 125, WR | | 125 | 90-91 | DF457 | DF451 |
| YZ 125, WR | | 125 | 92-97 | DF462 | DF451 |
| WR 200 R | | 200 | 93- | DF464 | DF451 |
| TT 250 R | | 250 | 93- | DF464 | DF451 |
| WR 250 | | 250 | 91- | DF450 | DF451 |
| YZ 250, W, RALLY | | 250 | 90-91 | DF450 | DF451 |
| YZ 250, WR | | 250 | 92-98 | DF462 | DF451 |
| YZ 360, RALLY | | 360 | 90- | DF450 | DF451 |
| WR 400 F | | 400 | 98-98 | DF462 | DF451 |
| YZ 400 F | | 400 | 98-98 | DF462 | DF451 |
| WR 500 | | 500 | 92- | DF457 | DF451 |
| TT 600 | | 600 | 93-94 | DF452 | DF451 |
| TT 600 | | 600 | 95-97 | DF452 | DF451 |
| TT 600 R | | 600 | 99-02 | DF452 | DF451 |
| TT 600 RE | | 600 | 03- | DF452 | DF451 |

## DF 452 W

øext. 267 mm øint. 118 — 4,0 — OE

| BRAND MARCA | MODEL MODELO | C.C. | YEAR | FRONT | REAR |
|---|---|---|---|---|---|
| YAMAHA | | | | | |
| TT 600 | | 600 | 93-94 | DF452 | DF451 |
| TT 600 | | 600 | 95-97 | DF452 | DF451 |
| TT 600 R | | 600 | 99-02 | DF452 | DF451 |
| TT 600 RE | | 600 | 03- | DF452 | DF451 |

## DF 457 W

øext. 230 mm øint. 86 — 3,0 — OE

| BRAND MARCA | MODEL MODELO | C.C. | YEAR | FRONT | REAR |
|---|---|---|---|---|---|
| YAMAHA | | | | | |
| YZ 125, WR | | 125 | 90-91 | DF457 | DF451 |



**OE:** Original equipment (original replacement disc) · **OE:** Equipo original (disco de remplazo del original) For other models years previous to 1990 visit **www.galferonline.es** · Para otros modelos anteriores al año 1990 visitar **www.galferonline.es**
For consult TÜV (ABE) type approvals visit **www.galfermoto.com --> DOWNALOAD --> TÜV CERTIFICATIONS** · Para consultar las homologaciones TÜV (ABE) visitar **www.galfermoto.com --> DESCARGAS --> CERTIFICACIONES TÜV**

| | | | | |
|---|---|---|---|---|
| WR 500 | 500 | 92- | DF457 | DF451 |
| TT 600 | 600 | 90-92 | DF457 | - |

## DF 462 W

øext. 245 mm øint. 118 — 3,0 — OE

| BRAND MARCA | MODEL MODELO | C.C. | YEAR | FRONT | REAR |
|---|---|---|---|---|---|
| **YAMAHA** | | | | | |
| YZ 125, WR | | 125 | 92-97 | DF462 | DF451 |
| YZ 125, WR | | 125 | 98-00 | DF462 | DF479 |
| YZ 250 F, WR F 4T | | 250 | 00-00 | DF462 | DF479 |
| YZ 250, WR | | 250 | 92-98 | DF462 | DF451 |
| YZ 250, WR | | 250 | 99-00 | DF462 | DF479 |
| WR 400 F | | 400 | 98-98 | DF462 | DF451 |
| WR 400 F | | 400 | 99-99 | DF462 | DF479 |
| YZ 400 F | | 400 | 98-98 | DF462 | DF451 |
| YZ 400 F | | 400 | 99-99 | DF462 | DF479 |

## DF 464 W

øext. 245 mm øint. 115 — 3,0 — OE

| BRAND MARCA | MODEL MODELO | C.C. | YEAR | FRONT | REAR |
|---|---|---|---|---|---|
| **YAMAHA** | | | | | |
| WR 200 R | | 200 | 93- | DF464 | DF451 |
| TT 250 R | | 250 | 93- | DF464 | DF451 |

## DF 479 W

øext. 240 mm øint. 115 — 4,0 — OE

| BRAND MARCA | MODEL MODELO | C.C. | YEAR | FRONT | REAR |
|---|---|---|---|---|---|
| **RIEJU** | | | | | |
| MARATHON 250 | | 250 | 09- | DF301 | DF479 |
| MRX 250 | | 250 | 06- | DF301 | DF479 |
| MARATHON 450 | | 450 | 09- | DF301 | DF479 |
| MRX 450 | | 450 | 05- | DF301 | DF479 |
| **YAMAHA** | | | | | |
| YZ 125, WR | | 125 | 98-00 | DF462 | DF479 |
| YZ 125, WR | | 125 | 01-02 | DF301 | DF479 |
| YZ 250 F, WR F 4T | | 250 | 00-00 | DF462 | DF479 |
| YZ 250 F, WR F 4T | | 250 | 01-02 | DF301 | DF479 |
| YZ 250, WR | | 250 | 99-00 | DF462 | DF479 |
| YZ 250, WR | | 250 | 01-02 | DF301 | DF479 |
| WR 400 F | | 400 | 99-99 | DF462 | DF479 |
| YZ 400 F | | 400 | 99-99 | DF462 | DF479 |
| WR 426 F | | 425 | 00-01 | DF301 | DF479 |
| YZ 426 F | | 425 | 00-01 | DF301 | DF479 |

## DF 489 W

øext. 220 mm øint. 100 — 3,0 — OE

| BRAND MARCA | MODEL MODELO | C.C. | YEAR | FRONT | REAR |
|---|---|---|---|---|---|
| **SUZUKI** | | | | | |
| RM 85 / L | | 85 | 05- | DF489 | DF329 |
| **YAMAHA** | | | | | |
| YZ 80 | | 80 | 93-02 | DF489 | DF497 |
| YZ 85 / LW | | 85 | 03- | DF489 | DF497 |

## DF 497 W

øext. 190 mm øint. 85 — 3,0 — OE

| BRAND MARCA | MODEL MODELO | C.C. | YEAR | FRONT | REAR |
|---|---|---|---|---|---|
| **YAMAHA** | | | | | |
| YZ 80 | | 80 | 93-02 | DF489 | DF497 |
| YZ 85 / LW | | 85 | 03- | DF489 | DF497 |

## DF 499 W / DF 499 WLL / DF 499 RW

øext. 245 mm øint. 115 — 4,0 — OE

| BRAND MARCA | MODEL MODELO | C.C. | YEAR | FRONT | REAR |
|---|---|---|---|---|---|
| **YAMAHA** | | | | | |
| YZ 125 | | 125 | 08- | DF301 | DF499 |
| YZ 125, WR | | 125 | 03-03 | DF301 | DF499 |
| YZ 125, WR | | 125 | 04-07 | DF301 | DF499 |
| WR 250 F 4T | | 250 | 03-06 | DF301 | DF499 |
| WR 250 F 4T | | 250 | 07- | DF301 | DF499 |
| YZ 250 | | 250 | 08- | DF301 | DF499 |
| YZ 250 F | | 250 | 03-06 | DF301 | DF499 |
| YZ 250 F | | 250 | 07-08 | DF301 | DF499 |
| YZ 250 F | | 250 | 09- | DF301 | DF499 |
| YZ 250 F, WR F 4T | | 250 | 03-06 | DF301 | DF499 |
| WR 426 F | | 425 | 02-02 | DF301 | DF499 |
| YZ 426 F | | 425 | 02-02 | DF301 | DF499 |
| WR 450 F | | 450 | 03-11 | DF301 | DF499 |
| WR 450 F | | 450 | 12- | DF301 | DF499 |
| YZ 450 F | | 450 | 03-07 | DF301 | DF499 |
| YZ 450 F | | 450 | 08-11 | DF301 | DF499 |
| YZ 450 F | | 450 | 12- | DF301 | DF499 |

## DF 606 W / DF 606 FLW / DF 606 RW / DF 606 WS / DF 606 RWS / DF 606 FLS / DF 606 FRS

| | øext. | mm | øint. | | |
|---|---|---|---|---|---|
| DF 606 W | 260 | 127 | | 3,0 | OE |
| DF 606 FLW | 260 | 127 | | 3,0 | OE |
| DF 606 RW | 260 | 127 | | 3,0 | |
| DF 606 WS | 270 | 127 | SP021/41 | 3,0 | |
| DF 606 RWS | 270 | 127 | SP021/41 | 3,0 | |
| DF 606 FLS | 270 | 127 | SP021/41 | 3,0 | |
| DF 606 FRS | 270 | 127 | SP021/41 | 3,0 | |

| BRAND MARCA | MODEL MODELO | C.C. | YEAR | FRONT | REAR |
|---|---|---|---|---|---|
| **ALFER** | | | | | |
| 125 VR 4T | | 125 | 03- | DF606 | DF607 |
| 125 VR 4T NO LIMITS | | 125 | 03- | DF606 | DF607 |
| 250 VR ENDURO | | 250 | 95- | DF606 | DF607 |
| 250 VR MOTOCROSS | | 250 | 95- | DF606 | DF607 |
| NO LIMITS | | 250 | 95- | DF606 | DF607 |
| **HUSABERG** | | | | | |
| 125 TE | | 125 | 11- | DF606 | DF607 |
| 250 FE | | 250 | 13- | DF606 | DF607 |
| 250 TE | | 250 | 11- | DF606 | DF607 |
| 300 TE | | 300 | 11- | DF606 | DF607 |
| 350 FE | | 350 | 13- | DF606 | DF607 |
| 390 FE | | 390 | 10- | DF606 | DF607 |
| 400 FE | | 400 | 00- | DF606 | DF607 |
| 450 FC/FE | | 450 | 04- | DF606 | DF607 |
| 450 FE | | 450 | 12- | DF606 | DF607 |
| 450 FX | | 450 | 10- | DF606 | DF607 |
| 501 FE | | 501 | 13- | DF606 | DF607 |
| 550 FC/FE | | 550 | 04- | DF606 | DF607 |
| 570 FE | | 570 | 09- | DF606 | DF607 |
| 650 FC/FE | | 650 | 04- | DF606 | DF607 |
| **HUSQVARNA** | | | | | |
| 125 TC | | 125 | 14- | DF606 | DF607 |
| 125 TE | | 125 | 14- | DF606 | DF607 |
| 250 FC | | 250 | 14- | DF606 | DF607 |
| 250 FE | | 250 | 14- | DF606 | DF607 |
| 250 TC | | 250 | 14- | DF606 | DF607 |
| 250 TE | | 250 | 14- | DF606 | DF607 |
| 300 TE | | 300 | 14- | DF606 | DF607 |
| 350 FC | | 350 | 14- | DF606 | DF607 |
| 350 FE | | 350 | 14- | DF606 | DF607 |
| 450 FC | | 450 | 14- | DF606 | DF607 |
| 450 FE | | 450 | 14- | DF606 | DF607 |
| 501 FE | | 501 | 14- | DF606 | DF607 |
| **KTM** | | | | | |
| 125 ENDURO | | 125 | 93- | DF606 | DF607 |
| 125 EXC | | 125 | 04- | DF606 | DF607 |
| 125 EXC/EGS/SX | | 125 | 95-03 | DF606 | DF607 |
| 125 GS | | 125 | 93-93 | DF606 | DF607 |
| 125 GS | | 125 | 94-94 | DF606 | DF607 |
| 125 MX | | 125 | 92-95 | DF606 | DF607 |
| 125 SX | | 125 | 93-93 | DF606 | DF607 |
| 125 SX | | 125 | 94-03 | DF606 | DF607 |
| 125 SX | | 125 | 04- | DF606 | DF607 |

| | | | | |
|---|---|---|---|---|
| 144 SX | 144 | 08- | DF606 | DF607 |
| 150 XC | 150 | 10- | DF606 | DF607 |
| 200 EGS | 200 | 99-02 | DF606 | DF607 |
| 200 EXC | 200 | 98-03 | DF606 | DF607 |
| 200 EXC | 200 | 04- | DF606 | DF607 |
| 200 SX | 200 | 03-03 | DF606 | DF607 |
| 200 SX | 200 | 04- | DF606 | DF607 |
| 250 F | 250 | 06- | DF606 | DF607 |
| 250 EGS | 250 | 99- | DF606 | DF607 |
| 250 ENDURO | 250 | 92-92 | DF606 | DF607 |
| 250 ENDURO | 250 | 93- | DF606 | DF607 |
| 250 EXC / 4T | 250 | 03-03 | DF606 | DF607 |
| 250 EXC / 4T | 250 | 04- | DF606 | DF607 |
| 250 EXC F | 250 | 15- | DF606 | DF607 |
| 250 EXC/EGS/SX | 250 | 94-02 | DF606 | DF607 |
| 250 GS | 250 | 93-93 | DF606 | DF607 |
| 250 GS | 250 | 94- | DF606 | DF607 |
| 250 MX | 250 | 03- | DF606 | DF607 |
| 250 SX | 250 | 94-02 | DF606 | DF607 |
| 250 SX | 250 | 03- | DF606 | DF607 |
| 250 SX F | 250 | 15- | DF606 | DF607 |
| 250 SX, EGS, EXC | 250 | 93-93 | DF606 | DF607 |
| 250 XC / F / W | 250 | 06- | DF606 | DF607 |
| 300 ENDURO | 300 | 92-92 | DF606 | DF607 |
| 300 ENDURO | 300 | 93- | DF606 | DF607 |
| 300 EXC | 300 | 03-03 | DF606 | DF607 |
| 300 EXC | 300 | 04- | DF606 | DF607 |
| 300 EXC - E | 300 | 08- | DF606 | DF607 |
| 300 MXC | 300 | 04- | DF606 | DF607 |
| 300 SX, EGS, EXC | 300 | 93-03 | DF606 | DF607 |
| 300 XC / W | 300 | 06- | DF606 | DF607 |
| 350 ECX F | 350 | 12- | DF606 | DF607 |
| 350 LC4 EXC | 350 | 94- | DF606 | DF607 |
| 350 MX | 350 | 92- | DF606 | DF607 |
| 350 SX F | 350 | 11- | DF606 | DF607 |
| 350 SX FACTORY | 350 | 10- | DF606 | DF607 |
| 350 XC F | 350 | 11- | DF606 | DF607 |
| 400 EXC | 400 | 04- | DF606 | DF607 |
| 400 LC4 EGS | 400 | 94-95 | DF606 | DF607 |
| 440 SX | 440 | 94- | DF606 | DF607 |
| 450 EXC | 450 | 03-03 | DF606 | DF607 |
| 450 EXC | 450 | 04- | DF606 | DF607 |
| 450 EXC - R | 450 | 08- | DF606 | DF607 |
| 450 MXC | 450 | 04- | DF606 | DF607 |
| 450 SX | 450 | 03- | DF606 | DF607 |
| 450 SXF | 450 | 07- | DF606 | DF607 |
| 450 XC | 450 | 06- | DF606 | DF607 |
| 450 XC SIX DAYS | 450 | 10- | DF606 | DF607 |
| 500 EXC | 500 | 14- | DF606 | DF607 |
| 500 MX | 500 | 92- | DF606 | DF607 |
| 500 SX | 500 | 93- | DF606 | DF607 |
| 505 SX | 505 | 07- | DF606 | DF607 |
| 525 EXC | 525 | 03-03 | DF606 | DF607 |
| 525 EXC | 525 | 04- | DF606 | DF607 |
| 525 MXC | 525 | 04- | DF606 | DF607 |
| 525 SX | 525 | 03-03 | DF606 | DF607 |
| 525 SX | 525 | 04- | DF606 | DF607 |
| 530 EXC - R | 530 | 08- | DF606 | DF607 |
| 530 XC / W | 530 | 08- | DF606 | DF607 |
| 530 XC SIX DAYS | 530 | 10- | DF606 | DF607 |
| 540 SXC | 540 | 99- | DF606 | DF607 |
| 550 MG,XC | 550 | 94- | DF606 | DF607 |
| 600 4T GARA | 600 | 91-92 | DF606 | DF607 |
| 600 4T GS | 600 | 93-93 | DF606 | DF607 |
| 600 4T GS | 600 | 94- | DF606 | DF607 |
| 600 MX LC4 | 600 | 90- | DF606 | DF607 |
| 625 EXC | 625 | 03- | DF606 | DF607 |

| | | | | |
|---|---|---|---|---|
| DF 607 W | øext. 220 mm øint. 110 | 4,0 | OE | |
| DF 607 WLL | øext. 220 mm øint. 110 | 4,0 | | |
| DF 607 WS | øext. 240 mm øint. 110 | 4,0 SP | | |
| DF 607 RW | øext. 220 mm øint. 110 | 4,0 | | |
| DF 607 RWS | øext. 240 mm øint. 110 | 4,0 SP | | |

| BRAND MARCA | MODEL MODELO | C.C. | YEAR | FRONT | REAR |
|---|---|---|---|---|---|
| **ALFER** | | | | | |
| 125 VR 4T | | 125 | 03- | DF606 | DF607 |
| 125 VR 4T NO LIMITS | | 125 | 03- | DF606 | DF607 |
| 250 VR ENDURO | | 250 | 95- | DF606 | DF607 |
| 250 VR MOTOCROSS | | 250 | 95- | DF606 | DF607 |
| NO LIMITS | | 250 | 95- | DF606 | DF607 |
| **GAS GAS** | | | | | |
| EC 400 FSE | | 400 | 01- | DF677 | DF607 |
| **HUSABERG** | | | | | |
| 125 TE | | 125 | 11- | DF606 | DF607 |
| 250 FE | | 250 | 13- | DF606 | DF607 |
| 250 TE | | 250 | 11- | DF606 | DF607 |
| 300 TE | | 300 | 11- | DF606 | DF607 |
| 350 FE | | 350 | 13- | DF606 | DF607 |
| 390 FE | | 390 | 10- | DF606 | DF607 |
| 400 FE | | 400 | 00- | DF606 | DF607 |
| 450 FC/FE | | 450 | 04- | DF606 | DF607 |
| 450 FE | | 450 | 12- | DF606 | DF607 |
| 450 FS | | 450 | 04-04 | | DF607 |
| 450 FSE | | 450 | 05- | | DF607 |
| 450 FX | | 450 | 10- | DF606 | DF607 |
| 501 FE | | 501 | 13- | DF606 | DF607 |
| 550 FC/FE | | 550 | 04- | DF606 | DF607 |
| 570 FE | | 570 | 09- | DF606 | DF607 |
| 650 FC/FE | | 650 | 04- | DF606 | DF607 |
| **HUSQVARNA** | | | | | |
| 125 TC | | 125 | 14- | DF606 | DF607 |
| 125 TE | | 125 | 14- | DF606 | DF607 |
| 250 FC | | 250 | 14- | DF606 | DF607 |
| 250 FE | | 250 | 14- | DF606 | DF607 |
| 250 TC | | 250 | 14- | DF606 | DF607 |
| 250 TE | | 250 | 14- | DF606 | DF607 |
| 300 TE | | 300 | 14- | DF606 | DF607 |
| 350 FC | | 350 | 14- | DF606 | DF607 |
| 350 FE | | 350 | 14- | DF606 | DF607 |
| 450 FC | | 450 | 14- | DF606 | DF607 |
| 450 FE | | 450 | 14- | DF606 | DF607 |
| 501 FE | | 501 | 14- | DF606 | DF607 |
| **KTM** | | | | | |
| 125 ENDURO | | 125 | 92-92 | | DF607 |
| 125 ENDURO | | 125 | 93- | DF606 | DF607 |
| 125 EXC | | 125 | 04- | DF606 | DF607 |
| 125 EXC/EGS/SX | | 125 | 95-03 | DF606 | DF607 |
| 125 GS | | 125 | 91-92 | | DF607 |
| 125 GS | | 125 | 93-93 | DF606 | DF607 |
| 125 GS | | 125 | 94-94 | DF606 | DF607 |
| 125 MX | | 125 | 92-95 | DF606 | DF607 |
| 125 SX | | 125 | 93-93 | DF606 | DF607 |
| 125 SX | | 125 | 94-03 | DF606 | DF607 |
| 125 SX | | 125 | 04- | DF606 | DF607 |
| 144 SX | | 144 | 08- | DF606 | DF607 |
| 150 XC | | 150 | 10- | DF606 | DF607 |
| 200 EGS | | 200 | 99-02 | DF606 | DF607 |

| | | | | |
|---|---|---|---|---|
| 200 EXC | 200 | 98-03 | DF606 | DF607 |
| 200 EXC | 200 | 04- | DF606 | DF607 |
| 200 SX | 200 | 03-03 | DF606 | DF607 |
| 200 SX | 200 | 04- | DF606 | DF607 |
| 250 F | 250 | 06- | DF606 | DF607 |
| 250 EGS | 250 | 99- | DF606 | DF607 |
| 250 ENDURO | 250 | 92-92 | DF606 | DF607 |
| 250 ENDURO | 250 | 93- | DF606 | DF607 |
| 250 EXC / 4T | 250 | 03-03 | DF606 | DF607 |
| 250 EXC / 4T | 250 | 04- | DF606 | DF607 |
| 250 EXC F | 250 | 15- | DF606 | DF607 |
| 250 EXC/EGS/SX | 250 | 94-02 | DF606 | DF607 |
| 250 GS | 250 | 91-92 | | DF607 |
| 250 GS | 250 | 93-93 | DF606 | DF607 |
| 250 GS | 250 | 94- | DF606 | DF607 |
| 250 MX | 250 | 92-92 | | DF607 |
| 250 MX | 250 | 03- | DF606 | DF607 |
| 250 SX | 250 | 94-02 | DF606 | DF607 |
| 250 SX | 250 | 03- | DF606 | DF607 |
| 250 SX F | 250 | 15- | DF606 | DF607 |
| 250 SX, EGS, EXC | 250 | 93-93 | DF606 | DF607 |
| 250 XC / F / W | 250 | 06- | DF606 | DF607 |
| 300 ENDURO | 300 | 92-92 | DF606 | DF607 |
| 300 ENDURO | 300 | 93- | DF606 | DF607 |
| 300 EXC | 300 | 03-03 | DF606 | DF607 |
| 300 EXC | 300 | 04- | DF606 | DF607 |
| 300 EXC - E | 300 | 08- | DF606 | DF607 |
| 300 GS | 300 | 91- | | DF607 |
| 300 MXC | 300 | 04- | DF606 | DF607 |
| 300 SX, EGS, EXC | 300 | 93-03 | DF606 | DF607 |
| 300 XC / W | 300 | 06- | DF606 | DF607 |
| 350 ECX F | 350 | 12- | DF606 | DF607 |
| 350 LC4 EXC | 350 | 94- | DF606 | DF607 |
| 350 MX | 350 | 91-91 | | DF607 |
| 350 MX | 350 | 92- | DF606 | DF607 |
| 350 SX F | 350 | 11- | DF606 | DF607 |
| 350 SX FACTORY | 350 | 10- | DF606 | DF607 |
| 350 XC F | 350 | 11- | DF606 | DF607 |
| 400 EXC | 400 | 04- | DF606 | DF607 |
| 400 LC4 EGS | 400 | 94-95 | DF606 | DF607 |
| 440 SX | 440 | 94- | DF606 | DF607 |
| 450 EXC | 450 | 03-03 | DF606 | DF607 |
| 450 EXC | 450 | 04- | DF606 | DF607 |
| 450 EXC - R | 450 | 08- | DF606 | DF607 |
| 450 MXC | 450 | 04- | DF606 | DF607 |
| 450 SMR | 450 | 07- | DF672 | DF607 |
| 450 SX | 450 | 03- | DF606 | DF607 |
| 450 SXF | 450 | 07- | DF606 | DF607 |
| 450 XC | 450 | 06- | DF606 | DF607 |
| 450 XC SIX DAYS | 450 | 10- | DF606 | DF607 |
| 500 EXC | 500 | 14- | DF606 | DF607 |
| 500 MX | 500 | 92- | DF606 | DF607 |
| 500 SX | 500 | 93- | DF606 | DF607 |
| 505 SX | 505 | 07- | DF606 | DF607 |
| 525 EXC | 525 | 03-03 | DF606 | DF607 |
| 525 EXC | 525 | 04- | DF606 | DF607 |
| 525 MXC | 525 | 04- | DF606 | DF607 |
| 525 SX | 525 | 03-03 | DF606 | DF607 |
| 525 SX | 525 | 04- | DF606 | DF607 |
| 530 EXC - R | 530 | 08- | DF606 | DF607 |
| 530 XC / W | 530 | 08- | DF606 | DF607 |
| 530 XC SIX DAYS | 530 | 10- | DF606 | DF607 |
| 540 SXC | 540 | 99- | DF606 | DF607 |
| 550 MG,XC | 550 | 94- | DF606 | DF607 |
| 600 4T GARA | 600 | 91-92 | DF606 | DF607 |
| 600 4T GS | 600 | 93-93 | DF606 | DF607 |
| 600 4T GS | 600 | 94- | DF606 | DF607 |
| 600 MX LC4 | 600 | 90- | DF606 | DF607 |
| 620 LC4 EXC, EGS, SX | 620 | 94- | DF672 | DF607 |
| 625 EXC | 625 | 03- | DF606 | DF607 |
| 640 LC4 ENDURO | 640 | 99- | DF672 | DF607 |



**OE:** Original equipment (original replacement disc) - **OE:** Equipo original (disco de remplazo del original) For other models years previous to 1990 visit **www.galferonline.es** - Para otros modelos anteriores al año 1990 visitar **www.galferonline.es**
For consult TÜV (ABE) type approvals visit **www.galfermoto.com --> DOWNALOAD --> TÜV CERTIFICATIONS** - Para consultar las homologaciones TÜV (ABE) visitar **www.galfermoto.com --> DESCARGAS --> CERTIFICACIONES TÜV**

**DF 626 FLW** — øext. 260 mm / øint. 120 — 3,0 — OE

| BRAND MARCA | MODEL MODELO | C.C. | YEAR | FRONT | REAR |
|---|---|---|---|---|---|
| **HUSABERG** | | | | | |
| | 350 FC | 350 | 95-99 | DF626 | |
| | 350 FE | 350 | 95-99 | DF626 | |
| | 501 FC | 501 | 95-99 | DF626 | |
| | 501 FE | 501 | 95-99 | DF626 | |
| | 600 FC | 600 | 95-99 | DF626 | |
| | 600 FE | 600 | 95-99 | DF626 | |
| **HUSQVARNA** | | | | | |
| | 125 CR | 125 | 94-99 | DF626 | DF638 |
| | 125 CR | 125 | 93-99 | DF626 | DF638 |
| | 125 CR, WR | 125 | 93-99 | DF626 | DF638 |
| | 125 WR | 125 | 94-99 | DF626 | DF638 |
| | 125 WR | 125 | 93-99 | DF626 | DF638 |
| | 125 WRE | 125 | 94-99 | DF626 | DF638 |
| | 250 CR | 250 | 94-99 | DF626 | DF638 |
| | 250 CR, WR | 250 | 93-99 | DF626 | DF638 |
| | 250 WR | 250 | 94-99 | DF626 | DF638 |
| | 350 TE | 350 | 94-99 | DF626 | DF638 |
| | 350 TE 4T | 350 | 91-94 | DF626 | DF638 |
| | 360 CR | 360 | 92-94 | DF626 | DF638 |
| | 360 CR | 360 | 94-99 | DF626 | DF638 |
| | 360 WR | 360 | 92-94 | DF626 | DF638 |
| | 360 WR | 360 | 94-99 | DF626 | DF638 |
| | TE 410 | 410 | 94-99 | DF626 | DF638 |
| | 510 TE | 510 | 90-94 | DF626 | DF638 |
| | 510 TE | 510 | 95-99 | DF626 | DF638 |
| | 610 TC | 610 | 94-99 | DF626 | DF638 |
| | 610 TC, TE 4T | 610 | 91-94 | DF626 | DF638 |
| | 610 TE | 610 | 92-94 | DF626 | DF638 |
| | 610 TE | 610 | 94-99 | DF626 | DF638 |

**DF 632 W** — øext. 220 mm / øint. 110 — 4,0 — OE

| BRAND MARCA | MODEL MODELO | C.C. | YEAR | FRONT | REAR |
|---|---|---|---|---|---|
| **BENELLI** | | | | | |
| | BX 449 | 449 | 07- | DF862 | DF632 |
| | 510 ENDURO | 510 | 08- | DF862 | DF632 |

**DF 635 FLW** — øext. 260 mm / øint. 120 — 3,0 — OE

**DF 635 FLS** — øext. 270 mm / øint. 120 — 3,0 — SP021

**DF 635 FRS** — øext. 270 mm / øint. 120 — 3,0 — SP021

| BRAND MARCA | MODEL MODELO | C.C. | YEAR | FRONT | REAR |
|---|---|---|---|---|---|
| **BETA** | | | | | |
| | 250 RR 4T | 250 | 05- | DF635 | DF670 |
| | 350 RR 4T | 350 | 11-12 | DF635 | DF670 |
| | 400 RR 4T | 400 | 05-12 | DF635 | DF670 |
| | 450 RR 4T | 450 | 05-12 | DF635 | DF670 |
| | 498 RR 4T | 498 | 12-12 | DF635 | DF670 |
| | 525 RR 4T | 525 | 05- | DF635 | DF670 |
| **HUSQVARNA** | | | | | |
| | 125 CR | 125 | 00-03 | DF635 | DF885 |
| | 125 CR | 125 | 04-04 | DF635 | DF885 |
| | 125 CR | 125 | 05- | DF635 | DF670 |
| | 125 SM S | 125 | 00- | DF635 | DF885 |
| | 125 SM S 4T | 125 | 11- | DF635 | DF885 |
| | 125 TE 4T | 125 | 11-13 | DF635 | DF885 |
| | 125 WR | 125 | 00-05 | DF635 | DF885 |
| | 125 WR | 125 | 06- | DF635 | DF670 |
| | 125 WRE | 125 | 00- | DF635 | DF885 |
| | 125 WXE | 125 | 07- | DF635 | |
| | 250 CR | 250 | 00-03 | DF635 | DF885 |
| | 250 CR | 250 | 04-04 | DF635 | DF885 |
| | 250 CR | 250 | 05- | DF635 | DF670 |
| | 250 TC | 250 | 04-04 | DF635 | DF885 |
| | 250 TC | 250 | 05-13 | DF635 | DF670 |
| | 250 TE | 250 | 05- | DF635 | DF885 |
| | 250 TE R | 250 | 13-13 | DF635 | DF885 |
| | 250 WR | 250 | 00- | DF635 | DF885 |
| | 300 WR | 300 | 09- | DF635 | DF885 |
| | 310 TE | 310 | 09- | DF635 | DF670 |
| | 310 TE R | 310 | 13- | DF635 | DF670 |
| | 360 WR | 360 | 00- | DF635 | DF885 |
| | TE 410/E | 410 | 00- | DF635 | DF885 |
| | 449 TE | 449 | 11- | DF635 | DF670 |
| | 450 TC | 450 | 05- | DF635 | DF670 |
| | 450 TE | 450 | 05- | DF635 | DF670 |
| | TC 449 | 450 | 11- | DF635 | DF885 |
| | TE 449 | 450 | 11- | DF635 | DF885 |
| | 510 TC | 510 | 04-04 | DF635 | DF885 |
| | 510 TC | 510 | 05- | DF635 | DF670 |
| | 510 TE | 510 | 00-04 | DF635 | DF885 |
| | 510 TE | 510 | 05- | DF635 | DF670 |
| | TE 511 | 511 | 11- | DF635 | DF885 |
| | 570 TE | 570 | 00- | DF635 | DF885 |
| | 610 TC | 610 | 00- | DF635 | DF885 |
| | 610 TE | 610 | 00- | DF635 | DF885 |
| | 630 TE | 630 | 10- | DF635 | DF885 |
| **OSSA** | | | | | |
| | ENDURO 300i | 300 | 12- | DF635 | |
| **SHERCO** | | | | | |
| | 250 SE-R | 250 | 15- | DF635 | DF885 |
| | 250 SEF-R | 250 | 15- | DF635 | DF885 |
| | 300 SE-R | 300 | 15- | DF635 | DF885 |
| | 450 SEF-R | 450 | 15- | DF635 | DF885 |

**DF 637 W** — øext. 198 mm / øint. 89 — 3,0 — OE

| BRAND MARCA | MODEL MODELO | C.C. | YEAR | FRONT | REAR |
|---|---|---|---|---|---|
| **KTM** | | | | | |
| | 60 SX | 60 | 99- | DF637 | - |
| | 65 SX | 65 | 00-01 | DF637 | DF639 |

**DF 638 W** — øext. 220 mm / øint. 112 — 4,0 — OE

| BRAND MARCA | MODEL MODELO | C.C. | YEAR | FRONT | REAR |
|---|---|---|---|---|---|
| **HUSQVARNA** | | | | | |
| | 125 CR | 125 | 91-91 | | DF638 |
| | 125 CR | 125 | 94-99 | DF626 | DF638 |
| | 125 CR | 125 | 93-99 | DF626 | DF638 |
| | 125 CR, WR | 125 | 93-99 | DF626 | DF638 |
| | 125 WR | 125 | 91- | | DF638 |
| | 125 WR | 125 | 94-99 | DF626 | DF638 |
| | 125 WR | 125 | 93-99 | DF626 | DF638 |
| | 125 WRE | 125 | 94-99 | DF626 | DF638 |
| | 250 CR | 250 | 91- | | DF638 |
| | 250 CR | 250 | 94-99 | DF626 | DF638 |
| | 250 CR, WR | 250 | 93-99 | DF626 | DF638 |
| | 250 WR | 250 | 91- | | DF638 |
| | 250 WR | 250 | 94-99 | DF626 | DF638 |
| | 260 WR | 260 | 91- | | DF638 |
| | 350 TE | 350 | 94-99 | DF626 | DF638 |
| | 350 TE 4T | 350 | 91-94 | DF626 | DF638 |
| | 360 CR | 360 | 92-94 | DF626 | DF638 |
| | 360 CR | 360 | 94-99 | DF626 | DF638 |
| | 360 WR | 360 | 92-94 | DF626 | DF638 |
| | 360 WR | 360 | 94-99 | DF626 | DF638 |
| | TE 410 | 410 | 94-99 | DF626 | DF638 |
| | 510 TE | 510 | 90-94 | DF626 | DF638 |
| | 510 TE | 510 | 95-99 | DF626 | DF638 |
| | 610 TC | 610 | 94-99 | DF626 | DF638 |
| | 610 TC, TE 4T | 610 | 91-94 | DF626 | DF638 |
| | 610 TE | 610 | 92-94 | DF626 | DF638 |
| | 610 TE | 610 | 94-99 | DF626 | DF638 |

**DF 639 W** — øext. 160 mm / øint. 45 — 3,0 — OE

| BRAND MARCA | MODEL MODELO | C.C. | YEAR | FRONT | REAR |
|---|---|---|---|---|---|
| **KTM** | | | | | |
| | 65 SX | 65 | 00-01 | DF637 | DF639 |
| | 65 SX | 65 | 02-03 | DF688 | DF639 |

**DF 645 CW** — øext. 320 mm / øint. 120 — 5,0 / 9,0 — OE

| BRAND MARCA | MODEL MODELO | C.C. | YEAR | FRONT | REAR |
|---|---|---|---|---|---|
| **HUSQVARNA** | | | | | |
| | 450 SM / RR | 450 | 06- | DF645 | DF885 |
| | 450 SM R | 450 | 01-04 | DF645 | DF885 |
| | 450 SM R | 450 | 05-05 | DF645 | DF885 |
| | 450 SM S | 450 | 01-04 | DF645 | DF885 |

**DF 658 W** — øext. 240 mm / øint. 108 — 3,5 — OE

| BRAND MARCA | MODEL MODELO | C.C. | YEAR | FRONT | REAR |
|---|---|---|---|---|---|
| **KTM** | | | | | |
| | EXC 50 | 50 | 99- | DF658 | |

**DF 670 W** — øext. 240 mm / øint. 112 — 4,0 — OE

**DF 670 PW** — øext. 240 mm / øint. 127 — 4,0

**DF 670 WLL** — øext. 240 mm / øint. 112 — 4,0

| BRAND MARCA | MODEL MODELO | C.C. | YEAR | FRONT | REAR |
|---|---|---|---|---|---|
| **BETA** | | | | | |
| | 250 RR 4T | 250 | 05- | DF635 | DF670 |
| | 350 RR 4T | 350 | 11-12 | DF635 | DF670 |
| | 400 RR 4T | 400 | 05-12 | DF635 | DF670 |
| | 450 RR 4T | 450 | 05-12 | DF635 | DF670 |
| | 498 RR 4T | 498 | 12-12 | DF635 | DF670 |
| | 525 RR 4T | 525 | 05- | DF635 | DF670 |

| HUSQVARNA | | | | |
|---|---|---|---|---|
| 125 CR | 125 | 05- | DF635 | DF670 |
| 125 WR | 125 | 06- | DF635 | DF670 |
| 250 CR | 250 | 05- | DF635 | DF670 |
| 250 TC | 250 | 05-13 | DF635 | DF670 |
| 310 TE | 310 | 09- | DF635 | DF670 |
| 310 TE R | 310 | 13- | DF635 | DF670 |
| 449 TE | 449 | 11- | DF635 | DF670 |
| 450 TC | 450 | 05- | DF635 | DF670 |
| 450 TE | 450 | 05- | DF635 | DF670 |
| 510 TC | 510 | 05- | DF635 | DF670 |
| 510 TE | 510 | 05- | DF635 | DF670 |
| **SHERCO** | | | | |
| 2.5 if | 250 | 09- | DF772 | DF670 |
| SE 2.5i | 250 | 12- | DF772 | DF670 |
| SX 2.5 F | 250 | 10- | DF772 | DF670 |
| SE 3.0 | 300 | 10-11 | DF772 | DF670 |
| SE 3.0i | 300 | 12- | DF772 | DF670 |
| 4.5 4T | 450 | 04-08 | DF772 | DF670 |
| 4.5 4T SM | 450 | 05-08 | | DF670 |
| 4.5 4T SM if | 450 | 09- | | DF670 |
| 4.5 if | 450 | 09- | DF772 | DF670 |
| SE 4.5i | 450 | 12- | DF772 | DF670 |
| 5.1 4T | 510 | 06-08 | DF772 | DF670 |
| 5.1 if | 510 | 09- | DF772 | DF670 |
| SE 5.1i | 510 | 12- | DF772 | DF670 |

**DF 672 FLW** — øext. 300 mm / øint. 127 — 4,0 — OE

| BRAND MARCA | MODEL MODELO | C.C. | YEAR | FRONT | REAR |
|---|---|---|---|---|---|
| **KTM** | | | | | |
| 400 LC4 EGS | | 400 | 96- | DF672 | |
| 450 RALLY | | 450 | 11- | DF672 | |
| 450 SMR | | 450 | 07- | DF672 | DF607 |
| 620 LC4 EXC, EGS, SX | | 620 | 94- | DF672 | DF607 |
| 640 LC4 ENDURO | | 640 | 99- | DF672 | DF607 |

**DF 675 W** — øext. 200 mm / øint. 63 — 4,0 — OE

| BRAND MARCA | MODEL MODELO | C.C. | YEAR | FRONT | REAR |
|---|---|---|---|---|---|
| **DERBI** | | | | | |
| SENDA DRD 125 SM 4T 4V | | 125 | 09- | | DF675 |
| **RIEJU** | | | | | |
| TANGO OFF ROAD 250 | | 250 | 09- | DF677 | DF675 |
| TANGO ROAD 250 | | 250 | 09- | DF677 | DF675 |

**DF 677 W** — øext. 260 mm / øint. 108 — 3,5 — OE

**DF 677 FLW** — øext. 260 mm / øint. 108 — 3,0 — OE

**DF 677 FLS** — øext. 270 mm / øint. 108 — 3,0 — SP027

**DF 677 FRS** — øext. 270 mm / øint. 108 — 3,0 — SP027

**DF 677 CW** — øext. 320 mm / øint. 108 — 5,0 / 0,0 — SP

| BRAND MARCA | MODEL MODELO | C.C. | YEAR | FRONT | REAR |
|---|---|---|---|---|---|
| **AJP** | | | | | |
| PR 4 125 ENDURO | | 125 | 05-09 | DF677 | DF678 |
| PR 4 125 ENDURO / PRO | | 125 | 10- | DF677 | DF678 |
| PR 4 125 SM | | 125 | 05-09 | DF677 | DF678 |
| PR 4 125 SM / PRO | | 125 | 10- | DF677 | DF678 |
| PR 4 200 ENDURO / PRO | | 200 | 10- | DF677 | DF678 |
| PR 4 200 SM / PRO | | 200 | 10- | DF677 | DF678 |
| ENDURO 250 | | 250 | 05- | DF677 | DF678 |
| **CCM** | | | | | |
| 404 DS SUPER MOTARD | | 404 | 03- | DF677 | DF678 |
| **GAS GAS** | | | | | |
| EC 125 | | 125 | 94-00 | DF677 | DF678 |
| EC 125 | | 125 | 01-14 | DF677 | DF678 |
| EC 125 | | 125 | 15- | DF677 | DF678 |
| EC 125 SIX DAYS | | 125 | 11- | DF677 | DF678 |
| ENDUCAMP 125 4T | | 125 | 05- | DF677 | DF678 |
| ENDURO TT 125 | | 125 | 93- | DF677 | DF678 |
| MC 125 | | 125 | 94-00 | DF677 | DF678 |
| MC 125 | | 125 | 01- | DF677 | DF678 |
| TT 125 | | 125 | 95- | DF677 | DF678 |
| EC 200 | | 200 | 99-00 | DF677 | DF678 |
| EC 200 | | 200 | 01- | DF677 | DF678 |
| EC 200 SIX DAYS | | 200 | 11- | DF677 | DF678 |
| EC 250 | | 250 | 95-98 | DF677 | DF678 |
| EC 250 | | 250 | 99-00 | DF677 | DF678 |
| EC 250 | | 250 | 01- | DF677 | DF678 |
| EC 250 E | | 250 | 11- | DF677 | DF678 |
| EC 250 F | | 250 | 10- | DF677 | DF678 |
| EC 250 FSE | | 250 | 01- | DF677 | DF678 |
| EC 250 RACING | | 250 | 09- | DF677 | DF678 |
| EC 250 SIX DAYS | | 250 | 11- | DF677 | DF678 |
| EC 250 YR | | 250 | 12- | DF677 | DF678 |
| FSE 250 4T | | 250 | 99- | DF677 | DF678 |
| MC 250 | | 250 | 95-98 | DF677 | DF678 |
| MC 250 | | 250 | 99-00 | DF677 | DF678 |
| MC 250 | | 250 | 01- | DF677 | DF678 |
| TT 250 | | 250 | 95- | DF677 | DF678 |
| EC 300 | | 300 | 99-00 | DF677 | DF678 |
| EC 300 | | 300 | 01- | DF677 | DF678 |
| EC 300 E | | 300 | 11- | DF677 | DF678 |
| EC 300 F | | 300 | 15- | DF677 | DF678 |
| EC 300 RACING | | 300 | 09- | DF677 | DF678 |
| EC 300 SIX DAYS | | 300 | 11- | DF677 | DF678 |
| EC 400 FSE | | 400 | 99-00 | DF677 | DF678 |
| EC 400 FSE | | 400 | 01- | DF677 | DF607 |
| ENDUCAMP 400 4T | | 400 | 05- | DF677 | DF678 |
| PAMPERA 400 | | 400 | 06- | DF677 | DF678 |
| EC 450 F | | 450 | 15- | DF677 | DF678 |
| EC 450 FSE | | 450 | 03- | DF677 | DF678 |
| EC 450 RAID | | 450 | 15- | DF677 | DF678 |
| HALLEY 450 SM | | 450 | 09- | DF677 | DF678 |
| **RIEJU** | | | | | |
| TANGO OFF ROAD 250 | | 250 | 09- | DF677 | DF675 |
| TANGO ROAD 250 | | 250 | 09- | DF677 | DF675 |

**DF 678 WLL** — øext. 220 mm / øint. 108 — 4,0 — OE

**DF 678 WS** — øext. 240 mm / øint. 108 — 4,0 — SP

| BRAND MARCA | MODEL MODELO | C.C. | YEAR | FRONT | REAR |
|---|---|---|---|---|---|
| **AJP** | | | | | |
| PR 4 125 ENDURO | | 125 | 05-09 | DF677 | DF678 |
| PR 4 125 ENDURO / PRO | | 125 | 10- | DF677 | DF678 |
| PR 4 125 SM | | 125 | 05-09 | DF677 | DF678 |
| PR 4 125 SM / PRO | | 125 | 10- | DF677 | DF678 |
| PR 4 200 ENDURO / PRO | | 200 | 10- | DF677 | DF678 |
| PR 4 200 SM / PRO | | 200 | 10- | DF677 | DF678 |
| ENDURO 250 | | 250 | 05- | DF677 | DF678 |
| **CCM** | | | | | |
| 404 DS SUPER MOTARD | | 404 | 03- | DF677 | DF678 |
| **GAS GAS** | | | | | |
| EC 125 | | 125 | 94-00 | DF677 | DF678 |
| EC 125 | | 125 | 01-14 | DF677 | DF678 |
| EC 125 | | 125 | 15- | DF677 | DF678 |
| EC 125 SIX DAYS | | 125 | 11- | DF677 | DF678 |
| ENDUCAMP 125 4T | | 125 | 05- | DF677 | DF678 |
| ENDURO TT 125 | | 125 | 93- | DF677 | DF678 |
| MC 125 | | 125 | 94-00 | DF677 | DF678 |
| MC 125 | | 125 | 01- | DF677 | DF678 |
| TT 125 | | 125 | 95- | DF677 | DF678 |
| EC 200 | | 200 | 99-00 | DF677 | DF678 |
| EC 200 | | 200 | 01- | DF677 | DF678 |
| EC 200 SIX DAYS | | 200 | 11- | DF677 | DF678 |
| EC 250 | | 250 | 95-98 | DF677 | DF678 |
| EC 250 | | 250 | 99-00 | DF677 | DF678 |
| EC 250 | | 250 | 01- | DF677 | DF678 |
| EC 250 E | | 250 | 11- | DF677 | DF678 |
| EC 250 F | | 250 | 10- | DF677 | DF678 |
| EC 250 FSE | | 250 | 01- | DF677 | DF678 |
| EC 250 RACING | | 250 | 09- | DF677 | DF678 |
| EC 250 SIX DAYS | | 250 | 11- | DF677 | DF678 |
| EC 250 YR | | 250 | 12- | DF677 | DF678 |
| FSE 250 4T | | 250 | 99- | DF677 | DF678 |
| MC 250 | | 250 | 95-98 | DF677 | DF678 |
| MC 250 | | 250 | 99-00 | DF677 | DF678 |
| MC 250 | | 250 | 01- | DF677 | DF678 |
| TT 250 | | 250 | 95- | DF677 | DF678 |
| EC 300 | | 300 | 99-00 | DF677 | DF678 |
| EC 300 | | 300 | 01- | DF677 | DF678 |
| EC 300 E | | 300 | 11- | DF677 | DF678 |
| EC 300 F | | 300 | 15- | DF677 | DF678 |
| EC 300 RACING | | 300 | 09- | DF677 | DF678 |
| EC 300 SIX DAYS | | 300 | 11- | DF677 | DF678 |
| EC 400 FSE | | 400 | 99-00 | DF677 | DF678 |
| ENDUCAMP 400 4T | | 400 | 05- | DF677 | DF678 |
| PAMPERA 400 | | 400 | 06- | DF677 | DF678 |
| EC 450 F | | 450 | 15- | DF677 | DF678 |
| EC 450 FSE | | 450 | 03- | DF677 | DF678 |
| EC 450 RAID | | 450 | 15- | DF677 | DF678 |
| FSR 450 | | 450 | 07- | | DF678 |
| HALLEY 450 SM | | 450 | 09- | DF677 | DF678 |
| SM 450 | | 450 | 05- | | DF678 |



**OE:** Original equipment (original replacement disc) · **OE:** Equipo original (disco de remplazo del original) For other models years previous to 1990 visit **www.galferonline.es** · Para otros modelos anteriores al año 1990 visitar **www.galferonline.es**
For consult TÜV (ABE) type approvals visit **www.galfermoto.com --> DOWNALOAD --> TÜV CERTIFICATIONS** · Para consultar las homologaciones TÜV (ABE) visitar **www.galfermoto.com --> DESCARGAS --> CERTIFICACIONES TÜV**

## DF 685 W

øext. 219 mm øint. 95 — 3,0 — OE

| BRAND MARCA | MODEL MODELO | C.C. | YEAR | FRONT | REAR |
|---|---|---|---|---|---|
| **KTM** | | | | | |
| | 85 SX | 85 | 03-06 | DF685 | DF686 |
| | 105 SX (USA) | 105 | 04-06 | DF685 | DF686 |

## DF 686 W

øext. 201 mm øint. 110 — 3,0 — OE

| BRAND MARCA | MODEL MODELO | C.C. | YEAR | FRONT | REAR |
|---|---|---|---|---|---|
| **KTM** | | | | | |
| | 85 SX | 85 | 03-06 | DF685 | DF686 |
| | 105 SX (USA) | 105 | 04-06 | DF685 | DF686 |

## DF 688 W

øext. 198 mm øint. 89 — 3,0 — OE

| BRAND MARCA | MODEL MODELO | C.C. | YEAR | FRONT | REAR |
|---|---|---|---|---|---|
| **KTM** | | | | | |
| | 65 SX | 65 | 02-03 | DF688 | DF639 |
| | 65 SX | 65 | 04-08 | DF688 | DF689 |
| | 65 SX | 65 | 09- | DF688 | DF689 |
| | 65 XC | 65 | 08- | DF688 | DF689 |
| **METRAKIT** | | | | | |
| | SRM 110 4T | 110 | 07- | DF688 | DF689 |

## DF 689 W

øext. 160 mm øint. 45 — 3,0 — OE

| BRAND MARCA | MODEL MODELO | C.C. | YEAR | FRONT | REAR |
|---|---|---|---|---|---|
| **KTM** | | | | | |
| | 65 SX | 65 | 04-08 | DF688 | DF689 |
| | 65 SX | 65 | 09- | DF688 | DF689 |
| | 65 XC | 65 | 08- | DF688 | DF689 |
| **METRAKIT** | | | | | |
| | SRM 110 4T | 110 | 07- | DF688 | DF689 |

## DF 699 W

øext. 290 mm øint. 108 — 3,5 — OE

## DF 699 FLW

øext. 290 mm øint. 108 — 4,0 — OE

| BRAND MARCA | MODEL MODELO | C.C. | YEAR | FRONT | REAR |
|---|---|---|---|---|---|
| **HM** | | | | | |
| | DERAPAGE RR | 50 | 09- | DF699 | DF889 |
| | DERAPAGE 4T | 125 | 11- | DF699 | DF889 |

## DF 710 FLW

øext. 260 mm øint. 106,5 — 3,0 — OE

## DF 710 FLS

øext. 270 mm øint. 106,5 — 3,0 — SP021

## DF 710 FRS

øext. 270 mm øint. 106,5 — 3,0 — SP021

| BRAND MARCA | MODEL MODELO | C.C. | YEAR | FRONT | REAR |
|---|---|---|---|---|---|
| **BMW** | | | | | |
| | G 450 X | 450 | 08- | DF710 | DF711 |
| | SPORT ENDURO 450 | 450 | 08- | DF710 | DF711 |

## DF 711 W

øext. 220 mm øint. 102 — 4,0 — OE

## DF 711 WLL

øext. 220 mm øint. 102 — 4,0 — OE

| BRAND MARCA | MODEL MODELO | C.C. | YEAR | FRONT | REAR |
|---|---|---|---|---|---|
| **BMW** | | | | | |
| | G 450 X | 450 | 08- | DF710 | DF711 |
| | SPORT ENDURO 450 | 450 | 08- | DF710 | DF711 |

## DF 718 W

øext. 218,5 mm øint. 121,5 — 4,0 — OE

| BRAND MARCA | MODEL MODELO | C.C. | YEAR | FRONT | REAR |
|---|---|---|---|---|---|
| **CANNONDALE** | | | | | |
| | XC 400 | 400 | 01- | DF338 | DF718 |
| | E 440 | 440 | 01- | DF338 | DF718 |
| | X 440 | 440 | 01- | DF338 | DF718 |
| | X 440 S | 440 | 01- | DF338 | DF718 |

## DF 740 W

øext. 185 mm øint. 70,5 — 3,0 — OE — INCLUDE PINS

| BRAND MARCA | MODEL MODELO | C.C. | YEAR | FRONT | REAR |
|---|---|---|---|---|---|
| **GAS GAS** | | | | | |
| | TXT 250 | 250 | 04- | DF740 | DF741 |
| | TXT 280 | 280 | 04- | DF740 | DF741 |
| | TXT 300 | 300 | 04- | DF740 | DF741 |
| **MONTESA** | | | | | |
| | COTA 4 RT | 250 | 05-11 | DF740 | DF741 |
| **SHERCO** | | | | | |
| | 0.8 | 80 | 03-12 | DF740 | DF741 |
| | 80 ST | 80 | 15- | DF740 | DF741 |
| | 1.25 | 125 | 02-05 | DF740 | DF741 |
| | 125 ST | 125 | 15- | DF740 | DF741 |
| | ST 1.25 | 125 | 06-12 | DF740 | DF741 |
| | ST 2.0 | 200 | 06- | DF740 | DF741 |
| | 2.5 02 Series | 250 | 02-05 | DF740 | DF741 |
| | 250 ST | 250 | 15- | DF740 | DF741 |
| | ST 2.5 | 250 | 06-12 | DF740 | DF741 |
| | 2.9 | 290 | 01-05 | DF740 | DF741 |
| | 290 ST | 290 | 15- | DF740 | DF741 |
| | ST 2.9 | 290 | 06-11 | DF740 | DF741 |
| | 305 ST | 305 | 15- | DF740 | DF741 |
| | 3.2 4T | 320 | 05- | DF740 | DF741 |

## DF 741 W

øext. 150 mm øint. 45 — 3,0 — OE

| BRAND MARCA | MODEL MODELO | C.C. | YEAR | FRONT | REAR |
|---|---|---|---|---|---|
| **GAS GAS** | | | | | |
| | TXT 250 | 250 | 04- | DF740 | DF741 |
| | TXT 280 | 280 | 04- | DF740 | DF741 |
| | TXT 300 | 300 | 04- | DF740 | DF741 |
| **MONTESA** | | | | | |
| | COTA 4 RT | 250 | 05-11 | DF740 | DF741 |
| **SHERCO** | | | | | |
| | 0.8 | 80 | 03-12 | DF740 | DF741 |
| | 80 ST | 80 | 15- | DF740 | DF741 |
| | 1.25 | 125 | 02-05 | DF740 | DF741 |
| | 125 ST | 125 | 15- | DF740 | DF741 |
| | ST 1.25 | 125 | 06-12 | DF740 | DF741 |
| | ST 2.0 | 200 | 06- | DF740 | DF741 |
| | 2.5 02 Series | 250 | 02-05 | DF740 | DF741 |
| | 250 ST | 250 | 15- | DF740 | DF741 |
| | ST 2.5 | 250 | 06-12 | DF740 | DF741 |
| | 2.9 | 290 | 01-05 | DF740 | DF741 |
| | 290 ST | 290 | 15- | DF740 | DF741 |
| | ST 2.9 | 290 | 06-11 | DF740 | DF741 |
| | 305 ST | 305 | 15- | DF740 | DF741 |
| | 3.2 4T | 320 | 05- | DF740 | DF741 |

## DF 751 W

øext. 290 mm øint. 109 — 4,0 — OE

## DF 751 FLW

øext. 290 mm øint. 109 — 4,0 — OE

| BRAND MARCA | MODEL MODELO | C.C. | YEAR | FRONT | REAR |
|---|---|---|---|---|---|
| **HM** | | | | | |
| | DERAPAGE 2T | 125 | 11- | DF751 | |
| | DERAPAGE 2T COMPETICION | 125 | 11- | DF751 | |

## DF 770 W

øext. 300 mm øint. 127 — 5,0 — OE

## DF 770 FLW

øext. 300 mm øint. 124,4 — 5,0 — OE

| BRAND MARCA | MODEL MODELO | C.C. | YEAR | FRONT | REAR |
|---|---|---|---|---|---|
| **KTM** | | | | | |
| | 690 ENDURO | 690 | 08- | DF770 | DF771 |
| | 690 ENDURO R | 690 | 09- | DF770 | DF771 |

## DF 771 W

øext. 240 mm øint. 109 — 4,0 — OE

| BRAND MARCA | MODEL MODELO | C.C. | YEAR | FRONT | REAR |
|---|---|---|---|---|---|
| **KTM** | | | | | |

| | | | | |
|---|---|---|---|---|
| 690 ENDURO | 690 | 08- | DF770 | DF771 |
| 690 ENDURO R | 690 | 09- | DF770 | DF771 |

## DF 772 FLW

øext. 270 mm øint. 120 — 3,0 — OE

| BRAND MARCA | MODEL MODELO | C.C. | YEAR | FRONT | REAR |
|---|---|---|---|---|---|
| **SHERCO** | | | | | |
| 2.5 if | | 250 | 09- | DF772 | DF670 |
| 250 SE | | 250 | 15- | DF772 | DF885 |
| 250 SEF | | 250 | 15- | DF772 | DF885 |
| SE 2.5i | | 250 | 12- | DF772 | DF670 |
| SX 2.5 F | | 250 | 10- | DF772 | DF670 |
| 300 SE | | 300 | 15- | DF772 | DF885 |
| 300 SEF | | 300 | 15- | DF772 | DF885 |
| 300 SEF-R | | 300 | 15- | DF772 | DF885 |
| SE 3.0 | | 300 | 10-11 | DF772 | DF670 |
| SE 3.0i | | 300 | 12- | DF772 | DF670 |
| 4.5 4T | | 450 | 04-08 | DF772 | DF670 |
| 4.5 if | | 450 | 09- | DF772 | DF670 |
| 450 SEF | | 450 | 15- | DF772 | DF885 |
| SE 4.5i | | 450 | 12- | DF772 | DF670 |
| 5.1 4T | | 510 | 06-08 | DF772 | DF670 |
| 5.1 if | | 510 | 09- | DF772 | DF670 |
| SE 5.1i | | 510 | 12- | DF772 | DF670 |

## DF 777 W

øext. 219 mm øint. 95 — 3,0 — OE

| BRAND MARCA | MODEL MODELO | C.C. | YEAR | FRONT | REAR |
|---|---|---|---|---|---|
| **HUSQVARNA** | | | | | |
| 85 TC 17/14 | | 85 | 14- | DF777 | DF797 |
| **KTM** | | | | | |
| 85 SX | | 85 | 07-10 | DF777 | DF778 |
| 85 SX | | 85 | 11-11 | DF777 | DF797 |
| 85 SX 17/14 | | 85 | 12- | DF777 | DF797 |
| 105 XC | | 105 | 07- | DF777 | DF778 |
| 150 SX 17/14 | | 150 | 15- | DF777 | DF797 |

## DF 778 W

øext. 201,5 mm øint. 110 — 4,0 — OE

| BRAND MARCA | MODEL MODELO | C.C. | YEAR | FRONT | REAR |
|---|---|---|---|---|---|
| **KTM** | | | | | |
| 85 SX | | 85 | 07-10 | DF777 | DF778 |
| 105 XC | | 105 | 07- | DF777 | DF778 |

## DF 779 W

øext. 160 mm øint. 84 — 2,5 — OE

| BRAND MARCA | MODEL MODELO | C.C. | YEAR | FRONT | REAR |
|---|---|---|---|---|---|
| **KTM** | | | | | |
| 50 SX | | 50 | 06- | DF779 | DF780 |

## DF 780 W

øext. 140 mm øint. 45 — 2,7 — OE

| BRAND MARCA | MODEL MODELO | C.C. | YEAR | FRONT | REAR |
|---|---|---|---|---|---|
| **KTM** | | | | | |
| 50 SX | | 50 | 06- | DF779 | DF780 |

## DF 794 W

øext. 240 mm øint. 95 — 3,0 — OE

| BRAND MARCA | MODEL MODELO | C.C. | YEAR | FRONT | REAR |
|---|---|---|---|---|---|
| **HUSQVARNA** | | | | | |
| 85 TC 19/16 | | 85 | 14- | DF794 | DF797 |
| **KTM** | | | | | |
| 85 SX 19/16 | | 85 | 13- | DF794 | DF797 |
| 150 SX 19/16 | | 150 | 15- | DF794 | DF797 |

## DF 796 W

øext. 260 mm øint. 95 — 3,0 — OE

| BRAND MARCA | MODEL MODELO | C.C. | YEAR | FRONT | REAR |
|---|---|---|---|---|---|
| **KTM** | | | | | |
| 250 FREERIDE | | 250 | 13- | DF796 | DF797 |
| 350 FREERIDE | | 350 | 12- | DF796 | DF797 |

## DF 797 W

øext. 210 mm øint. 109 — 4,0 — OE

| BRAND MARCA | MODEL MODELO | C.C. | YEAR | FRONT | REAR |
|---|---|---|---|---|---|
| **HUSQVARNA** | | | | | |
| 85 TC 17/14 | | 85 | 14- | DF777 | DF797 |
| 85 TC 19/16 | | 85 | 14- | DF794 | DF797 |
| **KTM** | | | | | |
| 85 SX | | 85 | 11-11 | DF777 | DF797 |
| 85 SX 17/14 | | 85 | 12- | DF777 | DF797 |
| 85 SX 19/16 | | 85 | 13- | DF794 | DF797 |
| 150 SX 17/14 | | 150 | 15- | DF777 | DF797 |
| 150 SX 19/16 | | 150 | 15- | DF794 | DF797 |
| 250 FREERIDE | | 250 | 13- | DF796 | DF797 |
| 350 FREERIDE | | 350 | 12- | DF796 | DF797 |

## DF 804 W

øext. 185 mm øint. 71,5 — 3,5 — OE

| BRAND MARCA | MODEL MODELO | C.C. | YEAR | FRONT | REAR |
|---|---|---|---|---|---|
| **BETA** | | | | | |
| EVO 80 JUNIOR | | 80 | 09- | DF804 | |
| EVO 125 | | 125 | 09-11 | DF804 | |
| EVO 125 MY12 | | 125 | 12- | DF804 | |
| EVO 200 MY12 | | 200 | 12- | DF804 | |
| 240 ST | | 240 | 92- | DF804 | |
| EVO 250 2T | | 250 | 09-11 | DF804 | |
| EVO 250 2T MY12 | | 250 | 12- | DF804 | |
| EVO 250 4T | | 250 | 09-11 | DF804 | |
| EVO 250 4T MY12 | | 250 | 12- | DF804 | |
| TECHNO 250 | | 250 | 94- | DF804 | DF643 |
| SYNT 260 | | 260 | 92-93 | DF804 | |
| SYNT 260 | | 260 | 94- | DF804 | DF643 |
| ZERO | | 260 | 98- | DF804 | |
| ZERO 93 GARA | | 260 | 93-97 | DF804 | DF619 |

## DF 808 W

øext. 184 mm øint. 70,5 — 2,9 — OE

| BRAND MARCA | MODEL MODELO | C.C. | YEAR | FRONT | REAR |
|---|---|---|---|---|---|
| **GAS GAS** | | | | | |
| TXT PRO RACING 125 | | 125 | 12-13 | DF808 | DF809 |
| TXT PRO RACING 125 | | 125 | 14- | DF808 | DF809 |
| TXT PRO RACING 250 | | 250 | 12-13 | DF808 | DF809 |
| TXT PRO RACING 250 | | 250 | 14- | DF808 | DF809 |
| TXT PRO RACING 280 | | 280 | 12-13 | DF808 | DF809 |
| TXT PRO RACING 280 | | 280 | 14- | DF808 | DF809 |
| TXT PRO RACING 300 | | 300 | 14- | DF808 | DF809 |
| **MONTESA** | | | | | |
| COTA 4 RT | | 250 | 12- | DF808 | DF809 |
| **SHERCO** | | | | | |
| ST 2.5 | | 250 | 13-14 | DF808 | DF809 |
| ST 2.9 | | 290 | 12-14 | DF808 | DF809 |

## DF 809 W

øext. 150 mm øint. 45,5 — 2,9 — OE

| BRAND MARCA | MODEL MODELO | C.C. | YEAR | FRONT | REAR |
|---|---|---|---|---|---|
| **GAS GAS** | | | | | |
| TXT PRO RACING 125 | | 125 | 12-13 | DF808 | DF809 |
| TXT PRO RACING 125 | | 125 | 14- | DF808 | DF809 |
| TXT PRO RACING 250 | | 250 | 12-13 | DF808 | DF809 |
| TXT PRO RACING 250 | | 250 | 14- | DF808 | DF809 |
| TXT PRO RACING 280 | | 280 | 12-13 | DF808 | DF809 |
| TXT PRO RACING 280 | | 280 | 14- | DF808 | DF809 |
| TXT PRO RACING 300 | | 300 | 14- | DF808 | DF809 |
| **MONTESA** | | | | | |
| COTA 4 RT | | 250 | 12- | DF808 | DF809 |
| **SHERCO** | | | | | |
| ST 2.5 | | 250 | 13-14 | DF808 | DF809 |
| ST 2.9 | | 290 | 12-14 | DF808 | DF809 |

## DF 814 W

øext. 260 mm øint. 127 — 3,0 — OE

| BRAND MARCA | MODEL MODELO | C.C. | YEAR | FRONT | REAR |
|---|---|---|---|---|---|
| **BETA** | | | | | |
| 250 RR 2T ENDURO | | 250 | 12- | DF814 | DF815 |
| 300 RR 2T ENDURO | | 300 | 13- | DF814 | DF815 |
| XTRAINER | | 300 | 15- | DF814 | DF815 |
| 350 RR 4T ENDURO | | 350 | 13- | DF814 | DF815 |
| 350 RR efi | | 350 | 15- | DF814 | DF815 |
| 390 RR 4T | | 390 | 15- | DF814 | DF815 |
| 400 RR 4T ENDURO | | 400 | 13- | DF814 | DF815 |
| 430 RR 4T | | 430 | 15- | DF814 | DF815 |
| 450 RR 4T ENDURO | | 450 | 13- | DF814 | DF815 |
| 480 RR 4T | | 480 | 15- | DF814 | DF815 |
| 498 RR 4T ENDURO | | 498 | 13- | DF814 | DF815 |



**OE:** Original equipment (original replacement disc) - **OE:** Equipo original (disco de remplazo del original) For other models years previous to 1990 visit **www.galferonline.es** - Para otros modelos anteriores al año 1990 visitar **www.galferonline.es**
For consult TÜV (ABE) type approvals visit **www.galfermoto.com --> DOWNLOAD --> TÜV CERTIFICATIONS** - Para consultar las homologaciones TÜV (ABE) visitar **www.galfermoto.com --> DESCARGAS --> CERTIFICACIONES TÜV**

| DF | øext. | øint. | mm | | | OE |
|---|---|---|---|---|---|---|
| 815 W | 240 | 109 | | 4,0 | | |
| 815 WLL | 240 | 109 | | 4,0 | | |
| 815 RW | 240 | 109 | | 4,0 | | |

| BRAND MARCA | MODEL MODELO | C.C. | YEAR | FRONT | REAR |
|---|---|---|---|---|---|
| **BETA** | | | | | |
| | 250 RR 2T ENDURO | 250 | 12- | DF814 | DF815 |
| | 300 RR 2T ENDURO | 300 | 13- | DF814 | DF815 |
| | XTRAINER | 300 | 15- | DF814 | DF815 |
| | 350 RR 4T ENDURO | 350 | 13- | DF814 | DF815 |
| | 350 RR efi | 350 | 15- | DF814 | DF815 |
| | 390 RR 4T | 390 | 15- | DF814 | DF815 |
| | 400 RR 4T ENDURO | 400 | 13- | DF814 | DF815 |
| | 430 RR 4T | 430 | 15- | DF814 | DF815 |
| | 450 RR 4T ENDURO | 450 | 13- | DF814 | DF815 |
| | 480 RR 4T | 480 | 15- | DF814 | DF815 |
| | 498 RR 4T ENDURO | 498 | 13- | DF814 | DF815 |

| DF | øext. | øint. | mm | | | OE |
|---|---|---|---|---|---|---|
| 826 CW | 320 | 105 | | 5,0 | 0,0 SP | |
| 826 CRWI-D | 320 | 105 | | 5,0 | 0,0 SP | |

| BRAND MARCA | MODEL MODELO | C.C. | YEAR | FRONT | REAR |
|---|---|---|---|---|---|
| **APRILIA** | | | | | |
| | SXV 450 | 450 | 06- | DF826 | DF827 |

| DF | øext. | øint. | mm | | | OE |
|---|---|---|---|---|---|---|
| 827 W | 240 | | 102 | 4,0 | | |

| BRAND MARCA | MODEL MODELO | C.C. | YEAR | FRONT | REAR |
|---|---|---|---|---|---|
| **APRILIA** | | | | | |
| | SXV 450 | 450 | 06- | DF826 | DF827 |

| DF | øext. | øint. | mm | | | OE |
|---|---|---|---|---|---|---|
| 828 W | 270 | | 70,5 | 3,0 | | |
| 828 FLW | 270 | | 70,5 | 3,0 | | |

| BRAND MARCA | MODEL MODELO | C.C. | YEAR | FRONT | REAR |
|---|---|---|---|---|---|
| **TM** | | | | | |
| | MX 85 | 85 | 05- | DF828 | |
| | 125 CROSS | 125 | 00- | DF828 | |
| | 125 ENDURO/MX | 125 | 00- | DF828 | |
| | EN 125 | 125 | 04-14 | DF828 | DF829 |
| | MX 125 | 125 | 05-14 | DF828 | DF829 |
| | EN144 | 144 | 14- | DF828 | DF829 |
| | MX 144 | 144 | 15- | DF828 | DF829 |
| | 250 ENDURO 4T | 250 | 00- | DF828 | |
| | EN 250 | 250 | 04-14 | DF828 | DF829 |
| | EN 250 F | 250 | 04-14 | DF828 | DF829 |
| | MX 250 | 250 | 05-14 | DF828 | DF829 |
| | MX 250 F | 250 | 05-14 | DF828 | DF829 |
| | 300 ENDURO 4T | 300 | 01- | DF828 | |
| | EN 300 | 300 | 14- | DF828 | DF829 |
| | MX 300 | 300 | 14- | DF828 | DF829 |
| | 400 4T E/CROSS | 400 | 00-02 | DF828 | |
| | 400 4T E/CROSS | 400 | 03- | DF828 | |
| | EN 450 F | 450 | 04-14 | DF828 | DF829 |
| | MX 450 F | 450 | 05-14 | DF828 | DF829 |
| | SMX 450 F | 450 | 04-14 | DF828 | DF829 |
| | 530 4T E/CROSS | 530 | 03- | DF828 | |
| | EN 530 F | 530 | 04-14 | DF828 | DF829 |
| | MX 530 F | 530 | 05-14 | DF828 | DF829 |

| DF | øext. | øint. | mm | | | OE |
|---|---|---|---|---|---|---|
| 829 W | 243 | | 114 | 4,0 | | |
| 829 WLL | 243 | | 114 | 4,0 | | |
| 829 RW | 243 | | 114 | 4,0 | | |

| BRAND MARCA | MODEL MODELO | C.C. | YEAR | FRONT | REAR |
|---|---|---|---|---|---|
| **TM** | | | | | |
| | EN 125 | 125 | 04-14 | DF828 | DF829 |
| | MX 125 | 125 | 05-14 | DF828 | DF829 |
| | EN144 | 144 | 14- | DF828 | DF829 |
| | MX 144 | 144 | 15- | DF828 | DF829 |
| | EN 250 | 250 | 04-14 | DF828 | DF829 |
| | EN 250 F | 250 | 04-14 | DF828 | DF829 |
| | MX 250 | 250 | 05-14 | DF828 | DF829 |
| | MX 250 F | 250 | 05-14 | DF828 | DF829 |
| | EN 300 | 300 | 14- | DF828 | DF829 |
| | MX 300 | 300 | 14- | DF828 | DF829 |
| | EN 450 F | 450 | 04-14 | DF828 | DF829 |
| | MX 450 F | 450 | 05-14 | DF828 | DF829 |
| | SMR 450 F | 450 | 14- | | DF829 |
| | SMX 450 F | 450 | 04-14 | DF828 | DF829 |
| | EN 530 F | 530 | 04-14 | DF828 | DF829 |
| | MX 530 F | 530 | 05-14 | DF828 | DF829 |

| DF | øext. | øint. | mm | | | OE |
|---|---|---|---|---|---|---|
| 860 W | 300 | | 90 | 4,0 | | |

| BRAND MARCA | MODEL MODELO | C.C. | YEAR | FRONT | REAR |
|---|---|---|---|---|---|
| **MOTORHISPANIA** | | | | | |
| | MH 10 PRO 125 LC SM | 125 | 12- | DF860 | DF861 |

| DF | øext. | øint. | mm | | | OE |
|---|---|---|---|---|---|---|
| 861 W | 220 | | 57 | 4,0 | | |

| BRAND MARCA | MODEL MODELO | C.C. | YEAR | FRONT | REAR |
|---|---|---|---|---|---|
| **MOTORHISPANIA** | | | | | |
| | MH 10 PRO 125 LC SM | 125 | 12- | DF860 | DF861 |

| DF | øext. | øint. | mm | | | OE |
|---|---|---|---|---|---|---|
| 862 FLW | 260 | | 110 | 3,0 | | |

| BRAND MARCA | MODEL MODELO | C.C. | YEAR | FRONT | REAR |
|---|---|---|---|---|---|
| **BENELLI** | | | | | |
| | BX 449 | 449 | 07- | DF862 | DF632 |
| | 510 ENDURO | 510 | 08- | DF862 | DF632 |

| DF | øext. | øint. | mm | | | OE |
|---|---|---|---|---|---|---|
| 872 W | 200 | | 90 | 3,0 | | |

| BRAND MARCA | MODEL MODELO | C.C. | YEAR | FRONT | REAR |
|---|---|---|---|---|---|
| **HUSQVARNA** | | | | | |
| | 65 CR | 65 | 11- | DF872 | DF873 |

| DF | øext. | øint. | mm | | | OE |
|---|---|---|---|---|---|---|
| 873 W | 165 | | 45 | 3,0 | | |

| BRAND MARCA | MODEL MODELO | C.C. | YEAR | FRONT | REAR |
|---|---|---|---|---|---|
| **HUSQVARNA** | | | | | |
| | 65 CR | 65 | 11- | DF872 | DF873 |

| DF | øext. | øint. | mm | | | OE |
|---|---|---|---|---|---|---|
| 885 W | 220 | | 112 | 4,0 | | |
| 885 PW | 220 | | 126,7 | 4,0 | | |

| BRAND MARCA | MODEL MODELO | C.C. | YEAR | FRONT | REAR |
|---|---|---|---|---|---|
| **HUSQVARNA** | | | | | |
| | 125 CR | 125 | 00-03 | DF635 | DF885 |
| | 125 CR | 125 | 04-04 | DF635 | DF885 |
| | 125 SM S | 125 | 00- | DF635 | DF885 |
| | 125 SM S 4T | 125 | 11- | DF635 | DF885 |
| | 125 TE 4T | 125 | 11-13 | DF635 | DF885 |
| | 125 WR | 125 | 00-05 | DF635 | DF885 |
| | 125 WRE | 125 | 00- | DF635 | DF885 |
| | 250 CR | 250 | 00-03 | DF635 | DF885 |
| | 250 CR | 250 | 04-04 | DF635 | DF885 |
| | 250 TC | 250 | 04-04 | DF635 | DF885 |
| | 250 TE | 250 | 05- | DF635 | DF885 |
| | 250 TE R | 250 | 13-13 | DF635 | DF885 |
| | 250 WR | 250 | 00- | DF635 | DF885 |
| | 300 WR | 300 | 09- | DF635 | DF885 |
| | 360 WR | 360 | 00- | DF635 | DF885 |
| | TE 410/E | 410 | 00- | DF635 | DF885 |
| | 450 SM / RR | 450 | 06- | DF645 | DF885 |
| | 450 SM R | 450 | 01-04 | DF645 | DF885 |
| | 450 SM R | 450 | 05-05 | DF645 | DF885 |
| | 450 SM S | 450 | 01-04 | DF645 | DF885 |
| | TC 449 | 450 | 11- | DF635 | DF885 |
| | TE 449 | 450 | 11- | DF635 | DF885 |
| | 510 TC | 510 | 04-04 | DF635 | DF885 |
| | 510 TE | 510 | 00-04 | DF635 | DF885 |
| | TE 511 | 511 | 11- | DF635 | DF885 |
| | 570 TE | 570 | 00- | DF635 | DF885 |
| | 610 TC | 610 | 00- | DF635 | DF885 |
| | 610 TE | 610 | 00- | DF635 | DF885 |
| | 630 TE | 630 | 10- | DF635 | DF885 |

| SHERCO | | | | |
|---|---|---|---|---|
| 250 SE | 250 | 15- | DF772 | DF885 |
| 250 SE-R | 250 | 15- | DF635 | DF885 |
| 250 SEF | 250 | 15- | DF772 | DF885 |
| 250 SEF-R | 250 | 15- | DF635 | DF885 |
| 300 SE | 300 | 15- | DF772 | DF885 |
| 300 SE-R | 300 | 15- | DF635 | DF885 |
| 300 SEF | 300 | 15- | DF772 | DF885 |
| 300 SEF-R | 300 | 15- | DF772 | DF885 |
| 450 SEF | 450 | 15- | DF772 | DF885 |
| 450 SEF-R | 450 | 15- | DF635 | DF885 |

## DF 887 W

øext. 220 mm øint. 110 — 4,5 — OE

| BRAND MARCA | MODEL MODELO | C.C. | YEAR | FRONT | REAR |
|---|---|---|---|---|---|
| VOR | | | | | |
| MX 350 | | 350 | 01- | | DF887 |
| EN 400 | | 400 | 00- | | DF887 |
| EN 450 | | 450 | 01- | | DF887 |
| EN 503 | | 503 | 00- | | DF887 |
| MX 503 | | 503 | 00- | | DF887 |
| EN 530 | | 530 | 01- | | DF887 |

## DF 888 W

øext. 280 mm øint. 108 — 3,5 — OE

| BRAND MARCA | MODEL MODELO | C.C. | YEAR | FRONT | REAR |
|---|---|---|---|---|---|
| MOTORHISPANIA | | | | | |
| MH 10 PRO 125 LC | | 125 | 12- | DF888 | DF889 |

## DF 889 W

øext. 220 mm øint. 62 — 3,5 — OE

| BRAND MARCA | MODEL MODELO | C.C. | YEAR | FRONT | REAR |
|---|---|---|---|---|---|
| HM | | | | | |
| DERAPAGE RR | | 50 | 09- | DF699 | DF889 |
| DERAPAGE 4T | | 125 | 11- | DF699 | DF889 |
| MOTORHISPANIA | | | | | |
| MH 10 PRO 125 LC | | 125 | 12- | DF888 | DF889 |

## MF 001

mm 95 x 20

| BRAND MARCA | MODEL MODELO | C.C. | YEAR | FRONT | REAR |
|---|---|---|---|---|---|
| HONDA | | | | | |
| CRF 70 F | | 70 | 04- | MF001 | MF001 |
| CRF 80 F | | 80 | 04- | MF001 | MF001 |
| CRF 100 F | | 100 | 04- | MF001 | MF001 |

## MF 003

mm 110 x 25

| BRAND MARCA | MODEL MODELO | C.C. | YEAR | FRONT | REAR |
|---|---|---|---|---|---|
| HONDA | | | | | |
| CRF 150 F | | 150 | 03-06 | FD164 | MF003 |
| CRF 230 F | | 230 | 04- | FD164 | MF003 |

## MF 010

mm 80 x 18

| BRAND MARCA | MODEL MODELO | C.C. | YEAR | FRONT | REAR |
|---|---|---|---|---|---|
| HONDA | | | | | |
| CRF 50 F | | 50 | 04- | MF010 | MF010 |

## MF 151

mm 130 x 28

| BRAND MARCA | MODEL MODELO | C.C. | YEAR | FRONT | REAR |
|---|---|---|---|---|---|
| SUZUKI | | | | | |
| DR 125 S | | 125 | 98- | FD095 | MF151 |

## MF 451

mm 130 x 28

| BRAND MARCA | MODEL MODELO | C.C. | YEAR | FRONT | REAR |
|---|---|---|---|---|---|
| YAMAHA | | | | | |
| TT 600 | | 600 | 90-92 | FD080 | MF451 |

## MF 456

mm 150 x 25

| BRAND MARCA | MODEL MODELO | C.C. | YEAR | FRONT | REAR |
|---|---|---|---|---|---|
| YAMAHA | | | | | |
| YZ 490 RALLY | | 490 | 90- | FD080 | MF456 |

## MF 458

mm 110 x 25

| BRAND MARCA | MODEL MODELO | C.C. | YEAR | FRONT | REAR |
|---|---|---|---|---|---|
| YAMAHA | | | | | |
| TT 225 R | | 225 | 00- | FD079 | MF458 |

## MF 712

mm 125 x 25

| BRAND MARCA | MODEL MODELO | C.C. | YEAR | FRONT | REAR |
|---|---|---|---|---|---|
| FANTIC | | | | | |
| 250 COACH | | 250 | 92-93 | FD065 | MF712 |

GALFER MOTO

FD BRAKE PADS

DF DISC WAVE®

MF BRAKE SHOES

# Off-Road

## UTV-ATV-QUADS

(from year 1990)

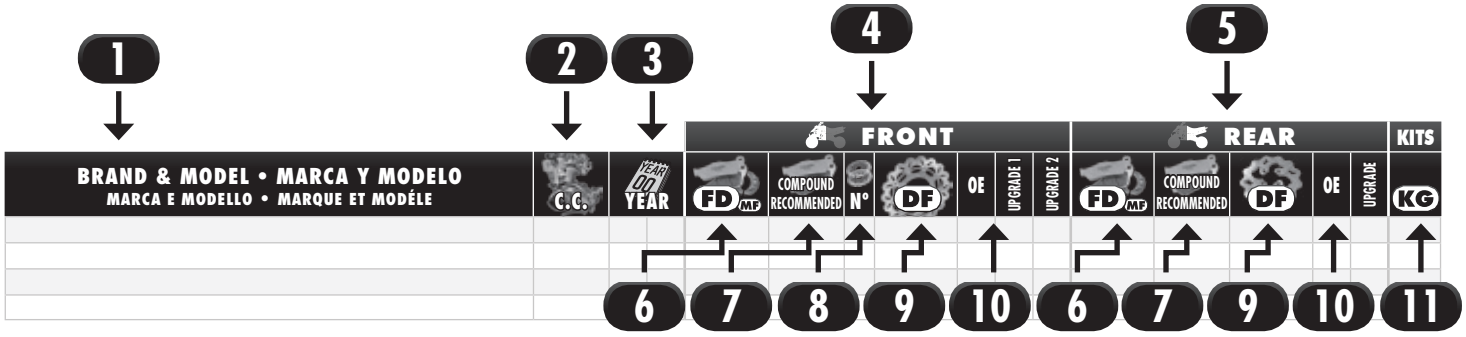


## DESCRIPTION • DESCRIPCIÓN • DESCRIZIONE • DESCRIPTION

**1**
**Brand and model of the motocycle**
**Marca y modelo de la moto**
Marca e modello del motociclo
Marque et modéle de la moto

**2**
**Cylinder capacity of the motocycle**
**Cilindrada de la moto**
Cilindrata del motociclo
Cylindrée de la moto

**3**
**Fabrication year of the motocycle**
**Año de fabricación de la moto**
Anno di produzione del motociclo
Année de fabrication de la moto

**4**
**Front zone of the motorcycle**
**Zona delantera de la moto**
Area anteriore del motociclo
Zone avant de la moto

**5**
**Rear zone of the motorcycle**
**Zona trasera de la moto**
Area posteriore del motociclo
Zone arrière de la moto

**6**
**Brake pads or shoes reference**
**Referencia de las pastillas o mordazas de freno**
Riferimento pastiglie o ganasce freno
Référence plaquettes ou mâchoires de frein

**7**
**Brake pads or shoes compound recommended for the motorcycle model**
**Compuesto recomendado de las pastillas o mordazas de freno para el modelo de moto**
Composti consigliata pastiglie o ganasce freno per il modello del motociclo
Composé recommandée plaquettes ou mâchoires de frein pour le modèle de moto

**8**
**Number of front brake discs**
**Número de discos de freno delanteros**
Numero di dischi freno anteriori
Nombre de disques de frein avant

**9**
**Brake disc reference**
**Referencia del disco de freno**
Riferimento disco freno
Référence disque de frein

**10**
**Brake disc options (OE: original equipment / Upgrade: more performance)**
**Opciones del disco de freno (OE: equipo original / Upgrade: más prestaciones)**
Opzioni disco freno (OE: attrezzatura originale / Upgrade: maggiori prestazioni)
Options disque de frein (OE: équipement original / Upgrade: plus de performance)

**11**
**Brake kit reference**
**Referencia del kit de freno**
Riferimento kit freno
Référence kit de frein

| BRAND & MODEL • MARCA Y MODELO / MARCA E MODELLO • MARQUE ET MODÉLE | C.C. | YEAR | | FRONT FD MF | FRONT COMPOUND RECOMMENDED | FRONT N° | FRONT DF | FRONT OE | FRONT UPGRADE 1 | FRONT UPGRADE 2 | REAR FD MF | REAR COMPOUND RECOMMENDED | REAR DF | REAR OE | REAR UPGRADE | KITS KG |
|---|---|---|---|---|---|---|---|---|---|---|---|---|---|---|---|---|
| **ADLY 4 Wheels** | | | | | | | | | | | | | | | | |
| CRUSADER QUAD 150 | 150 | 06 | | FD094 | G1054 | 2 | | | | | FD094 | G1054 | | | | |
| INTERCEPTOR 150 | 150 | 06 | | FD094 | G1054 | 2 | | | | | FD094 | G1054 | | | | |
| ATV 280 S | 280 | 08 | | FD336 | G1397 | 2 | | | | | | | | | | |
| ATV 280 U | 280 | 08 | | FD336 | G1397 | 2 | | | | | | | | | | |
| CRUSADER QUAD 300 | 300 | 06 | | FD094 | G1396 | 2 | | | | | FD094 | G1396 | | | | |
| INTERCEPTOR 300 | 300 | 06 | | FD336 | G1397 | 2 | | | | | FD094 | G1396 | | | | |
| 320 4 VALVE 4X4 | 320 | 08 | | FD336 | G1397 | 2 | | | | | | | | | | |
| ATV 320 S | 320 | 08 | | FD336 | G1397 | 2 | | | | | | | | | | |
| ATV 320 U | 320 | 08 | | FD336 | G1397 | 2 | | | | | | | | | | |
| ATV 500 S | 500 | 08 | | FD336 | G1397 | 2 | | | | | | | | | | |
| REVO R 50 | 50 | 03 | | MF | | | - | | | | FD094 | G1054 | | | | |
| REVO R 100 | 100 | 03 | | MF | | | - | | | | FD094 | G1054 | | | | |
| COBRA RS 125 | 125 | 03 | | MF | | | - | | | | FD117 | G1397 | | | | |
| OVERLAND 125 | 125 | 03 | | MF | | | - | | | | FD117 | G1397 | | | | |
| COBRA RS 180 | 180 | 03 | | MF | | | - | | | | FD117 | G1397 | | | | |
| OVERLAND 180 | 180 | 03 | | MF | | | - | | | | FD117 | G1397 | | | | |
| ROADSTER 180 | 180 | 03 | | MF | | | - | | | | FD117 | G1397 | | | | |
| COBRA 220 | 220 | 06 | | FD094 | G1396 | 2 | | | | | FD094 | G1054 | | | | |
| OVERLAND 3.0 | 300 | 06 | | FD094 | G1396 | 2 | | | | | FD094 | G1396 | | | | |
| CROSSLAND RX 350 | 350 | 11 | | FD094 | G1396 | 2 | | | | | FD117 | G1397 | | | | |
| **ARCTIC CAT 4 Wheels** | | | | | | | | | | | | | | | | |
| 250 2X4/4X4 TODOS | 250 | 98 | 04 | FD302 | G1397 | 2 | DF723 | W | | | FD302 | G1397 | DF723 | W | | |
| 250 2X4/4X4 TODOS | 250 | 05 | | FD353 | G1397 | 2 | DF723 | W | | | FD353 | G1397 | DF723 | W | | |
| 300 2X4/4X4 TODOS | 300 | 98 | 04 | FD302 | G1397 | 2 | DF723 | W | | | FD302 | G1397 | DF723 | W | | |
| 300 2X4 | 300 | 10 | | FD353 | G1397 | 2 | DF723 | W | | | FD353 | G1397 | DF723 | W | | |
| 300 4X4 | 300 | 05 | | FD353 | G1397 | 2 | DF723 | W | | | FD353 | G1397 | DF723 | W | | |
| 375 2X4/4X4 TODOS | 375 | 98 | 04 | FD302 | G1397 | 2 | DF723 | W | | | FD302 | G1397 | DF723 | W | | |
| 400 2X4/4X4 TODOS | 400 | 98 | 04 | FD302 | G1397 | 2 | DF723 | W | | | FD302 | G1397 | DF723 | W | | |
| 400 FI 5 4X4 | 400 | 05 | | FD353 | G1397 | 2 | DF723 | W | | | FD353 | G1397 | DF723 | W | | |
| 450 Hi | 450 | 10 | | FD353 | G1397 | 2 | DF723 | W | | | FD353 | G1397 | DF723 | W | | |
| 454 2X4/4X4 TODOS | 454 | 98 | 04 | FD302 | G1397 | 2 | DF723 | W | | | FD353 | G1397 | DF723 | W | | |
| 500 2X4/4X4 TODOS | 500 | 98 | 04 | FD302 | G1397 | 2 | DF723 | W | | | FD302 | G1397 | DF723 | W | | |
| 500 FI 5 | 500 | 05 | | FD353 | G1397 | 2 | DF723 | W | | | FD353 | G1397 | DF723 | W | | |
| 500 TRV | 500 | 05 | | FD353 | G1397 | 2 | DF723 | W | | | FD353 | G1397 | DF723 | W | | |
| 650 4X4 | 650 | 05 | | FD353 | G1397 | 2 | DF723 | W | | | FD353 | G1397 | DF723 | W | | |
| 650 H1 4X4 | 650 | 05 | | FD353 | G1397 | 2 | DF723 | W | | | FD353 | G1397 | DF723 | W | | |
| 650 PROWLER XT | 650 | 05 | | FD353 | G1397 | 2 | DF723 | W | | | FD353 | G1397 | DF723 | W | | |
| 650 TRV | 650 | 09 | | FD353 | G1397 | 2 | DF723 | W | | | FD353 | G1397 | DF723 | W | | |
| 700 DIESEL TRV | 700 | 06 | | FD353 | G1397 | 2 | DF723 | W | | | FD353 | G1397 | DF723 | W | | |
| 700 H1 TRV | 700 | 09 | | FD353 | G1397 | 2 | DF723 | W | | | FD353 | G1397 | DF723 | W | | |
| 700 SUPER DUTY DIESEL | 700 | 10 | | FD353 | G1397 | 2 | DF723 | W | | | FD353 | G1397 | DF723 | W | | |
| 1000 THUNDERCAT | 1000 | 08 | | FD353 | G1397 | 2 | DF723 | W | | | FD353 | G1397 | DF723 | W | | |
| 1000 H2 TRV | 1000 | 09 | | FD353 | G1397 | 2 | DF723 | W | | | FD353 | G1397 | DF723 | W | | |
| 1000 WILDCAT 1000i H.D. | 1000 | 12 | | FD353 | G1397 | 2 | | | | | FD353 | G1397 | | | | |
| **ARCTIC CAT SNOW** | | | | | | | | | | | | | | | | |
| WILLWOOD BRAKES TODOS | | 01 | | | | | | | | | FD182 | G1054 | | | | |
| COGUAR DE LUXE | | 98 | | | | | | | | | FD182 | G1054 | | | | |
| POWDER EXT | | 95 | 98 | | | | | | | | FD182 | G1054 | | | | |
| THUNDERCAT | | 93 | 00 | | | | | | | | FD182 | G1054 | | | | |
| JAG 440 Z | 440 | 95 | 97 | | | | | | | | FD182 | G1054 | | | | |
| ZL 440 | 440 | 97 | 00 | | | | | | | | FD182 | G1054 | | | | |
| ZR 440 | 440 | 93 | 00 | | | | | | | | FD182 | G1054 | | | | |
| POWDER 500 SPECIAL | 500 | 98 | 00 | | | | | | | | FD182 | G1054 | | | | |
| ZL 500 EFI | 500 | 98 | 00 | | | | | | | | FD182 | G1054 | | | | |
| ZR 500 EFI | 500 | 95 | 00 | | | | | | | | FD182 | G1054 | | | | |
| ETX 580 EFI - MC | 580 | 95 | 98 | | | | | | | | FD182 | G1054 | | | | |
| PANTERA | 580 | 95 | 98 | | | | | | | | FD182 | G1054 | | | | |
| POWDER 580 SPECIAL | 580 | 97 | 98 | | | | | | | | FD182 | G1054 | | | | |
| ZR 580 | 580 | 93 | 00 | | | | | | | | FD182 | G1054 | | | | |
| ETX 600 TRIPLE | 600 | 97 | 00 | | | | | | | | FD182 | G1054 | | | | |
| POWDER 600 SPECIAL EFI | 600 | 97 | 00 | | | | | | | | FD182 | G1054 | | | | |
| ZL 600 EFI | 600 | 98 | 00 | | | | | | | | FD182 | G1054 | | | | |
| ZR 600 EFI | 600 | 98 | 00 | | | | | | | | FD182 | G1054 | | | | |
| ZRT 600 | 600 | 96 | 00 | | | | | | | | FD182 | G1054 | | | | |
| POWDER 700 SPECIAL EFI | 600 | 99 | 00 | | | | | | | | FD182 | G1054 | | | | |
| WILDCAT 700 EFI | 700 | 95 | 96 | | | | | | | | FD182 | G1054 | | | | |
| ZR 700 | 700 | 94 | 00 | | | | | | | | FD182 | G1054 | | | | |
| PANTERA 800 | 800 | 98 | 99 | | | | | | | | FD182 | G1054 | | | | |
| ZRT 800 | 800 | 96 | 00 | | | | | | | | FD182 | G1054 | | | | |
| **BAROSSA 4 Wheels** | | | | | | | | | | | | | | | | |
| PYTHON 50 | 50 | 04 | | MF | | | - | | | | FD187 | G1054 | | | | |
| PYTHON 100 | 100 | 04 | | MF | | | - | | | | FD187 | G1054 | | | | |

OE discs → W FLW CW Special discs → WLL WS RW RWS FLS FRS CRW

| BRAND & MODEL • MARCA Y MODELO<br>MARCA E MODELLO • MARQUE ET MODÉLE | C.C. | YEAR | | FRONT FD MF | FRONT COMPOUND RECOMMENDED | FRONT N° | FRONT DF | FRONT OE | FRONT UPGRADE 1 | FRONT UPGRADE 2 | REAR FD MF | REAR COMPOUND RECOMMENDED | REAR DF | REAR OE | REAR UPGRADE | KITS KG |
|---|---|---|---|---|---|---|---|---|---|---|---|---|---|---|---|---|
| 150 CHEETAH | 150 | 03 | | MF | | | - | | | | FD187 | G1054 | | | | |
| 150 MAGNA | 150 | 03 | | MF | | | - | | | | FD187 | G1054 | | | | |
| 170 CHEETAH | 170 | 03 | | MF | | | - | | | | FD187 | G1054 | | | | |
| 170 MAGNA | 170 | 03 | | MF | | | - | | | | FD187 | G1054 | | | | |
| **BLANEY 4 Wheels** | | | | | | | | | | | | | | | | |
| XC 125 TROJAN | 125 | 03 | | MF | | | - | | | | FD073 | G1054 | | | | |
| XL 200 TROOPER | 200 | 03 | | MF | | | - | | | | FD117 | G1397 | | | | |
| **BOMBARDIER 4 Wheels** | | | | | | | | | | | | | | | | |
| RALLY 200 | 200 | 03 | 04 | FD094 | G1396 | 2 | | | | | | | | | | |
| RALLY 200 | 200 | 05 | | FD094 | G1396 | 2 | | | | | FD315 | G1397 | | | | |
| OUTLANDER 330 DER. | 330 | 04 | | FD315 | G1397 | 2 | | | | | | G1397 | | | | |
| OUTLANDER 330 IZQ. | 330 | 04 | | FD318 | G1397 | 2 | | | | | FD315 | G1397 | | | | |
| OUTLANDER 400 DER. | 400 | 03 | | FD315 | G1397 | 2 | | | | | | G1397 | | | | |
| OUTLANDER 400 IZQ. | 400 | 03 | | FD318 | G1397 | 2 | | | | | FD315 | G1397 | | | | |
| OUTLANDER 400 DER. MAX | 400 | 03 | | FD315 | G1397 | 2 | | | | | | G1397 | | | | |
| OUTLANDER 400 IZQ. MAX | 400 | 03 | | FD318 | G1397 | 2 | | | | | FD315 | G1397 | | | | |
| TRAXTER 500 XL / XT | 500 | 00 | | FD220 | G1054 | 2 | DF719 | W | | | FD220 | G1054 | DF727 | W | | |
| QUEST 500/600 DER. | 650 | 02 | | FD318 | G1397 | 2 | DF719 | W | | | | G1397 | DF727 | W | | |
| QUEST 500/600 IZQ. | 650 | 02 | | FD315 | G1397 | 2 | DF719 | W | | | FD315 | G1397 | DF727 | W | | |
| DS 650 / BAJA DER. | 650 | 00 | | FD318 | G1397 | 2 | DF719 | W | | | | G1397 | DF727 | W | | |
| DS 650 / BAJA IZQ. | 650 | 00 | | FD315 | G1397 | 2 | DF719 | W | | | FD315 | G1397 | DF727 | W | | |
| TRAXTER MAX 650 DER. | 650 | 04 | | FD318 | G1397 | 2 | DF719 | W | | | | G1397 | | | | |
| TRAXTER MAX 650 IZQ. | 650 | 04 | | FD315 | G1397 | 2 | DF719 | W | | | FD318 | G1397 | | | | |
| OUTLANDER 800 DER. | 800 | 06 | | FD318 | G1397 | 2 | | | | | | G1397 | DF727 | W | | |
| OUTLANDER 800 IZQ. | 800 | 06 | | FD315 | G1397 | 2 | | | | | FD315 | G1397 | DF727 | W | | |
| **CAN-AM 4 Wheels** | | | | | | | | | | | | | | | | |
| DS 90 X | 90 | 08 | | FD094 | G1054 | 2 | | | | | FD094 | G1054 | | | | |
| RALLY 200 | 200 | 07 | | FD073 | G1054 | 2 | | | | | FD315 | G1397 | | | | |
| DS 250 | 250 | 07 | | FD336 | G1397 | 2 | | | | | FD336 | G1397 | | | | |
| OUTLANDER 400 STD/XT IZQ./LEFT | 400 | 07 | | FD315 | G1397 | 2 | | | | | | G1397 | | | | |
| OUTLANDER 400 STD/XT DER./RIGHT | 400 | 07 | | FD318 | G1397 | 2 | | | | | FD315 | G1397 | | | | |
| OUTLANDER 400 MAX STD/XT IZQ./LEFT | 400 | 07 | | FD315 | G1397 | 2 | | | | | | G1397 | | | | |
| OUTLANDER 400 MAX STD/XT DER./RIGHT | 400 | 07 | | FD318 | G1397 | 2 | | | | | FD315 | G1397 | | | | |
| OUTLANDER 500 STD/XT IZQ./LEFT | 500 | 07 | | FD315 | G1397 | 2 | | | | | | G1397 | | | | |
| OUTLANDER 500 STD/XT DER./RIGHT | 500 | 07 | | FD318 | G1397 | 2 | | | | | FD315 | G1397 | | | | |
| OUTLANDER 500 MAX STD/XT IZQ./LEFT | 500 | 07 | | FD315 | G1397 | 2 | | | | | | G1397 | | | | |
| OUTLANDER 500 MAX STD/XT DER./RIGHT | 500 | 07 | | FD318 | G1397 | 2 | | | | | FD315 | G1397 | | | | |
| DS 650 X IZQ./LEFT | 650 | 07 | | FD315 | G1397 | 2 | | | | | | G1397 | | | | |
| DS 650 X DER./RIGHT | 650 | 07 | | FD318 | G1397 | 2 | | | | | FD315 | G1397 | | | | |
| OUTLANDER 650 STD/XT IZQ./LEFT | 650 | 07 | | FD315 | G1397 | 2 | | | | | | G1397 | | | | |
| OUTLANDER 650 STD/XT DER./RIGHT | 650 | 07 | | FD318 | G1397 | 2 | | | | | FD315 | G1397 | | | | |
| OUTLANDER 650 MAX STD/XT IZQ./LEFT | 650 | 07 | | FD315 | G1397 | 2 | | | | | | G1397 | | | | |
| OUTLANDER 650 MAX STD/XT DER./RIGHT | 650 | 07 | | FD318 | G1397 | 2 | | | | | FD315 | G1397 | | | | |
| OUTLANDER 800 STD/XT IZQ./LEFT | 800 | 07 | | FD315 | G1397 | 2 | | | | | | G1397 | | | | |
| OUTLANDER 800 STD/XT DER./RIGHT | 800 | 07 | | FD318 | G1397 | 2 | | | | | FD315 | G1397 | | | | |
| OUTLANDER 800 MAX STD/XT IZQ./LEFT | 800 | 07 | | FD315 | G1397 | 2 | | | | | | G1397 | | | | |
| OUTLANDER 800 MAX STD/XT DER./RIGHT | 800 | 07 | | FD318 | G1397 | 2 | | | | | FD315 | G1397 | | | | |
| RENEGADE 800 HO efi IZQ./LEFT | 800 | 07 | | FD315 | G1397 | 2 | | | | | | G1397 | | | | |
| RENEGADE 800 HO efi DER./RIGHT | 800 | 07 | | FD318 | G1397 | 2 | | | | | FD315 | G1397 | | | | |
| **CANNONDALE 4 Wheels** | | | | | | | | | | | | | | | | |
| FX 400 DER. | 400 | 01 | | FD318 | G1397 | 2 | DF717 | W | | | | G1397 | | | | |
| FX 400 IZQ. | 400 | 01 | | FD315 | G1397 | 2 | DF717 | W | | | FD315 | G1397 | DF716 | W | | |
| CANNIBAL 440 DER. | 440 | 02 | | FD318 | G1397 | 2 | DF717 | W | | | | G1397 | | | | |
| CANNIBAL 440 IZQ. | 440 | 02 | | FD315 | G1397 | 2 | DF717 | W | | | FD315 | G1397 | DF716 | W | | |
| BLAZE 440 DER. | 440 | 02 | | FD318 | G1397 | 2 | DF717 | W | | | | G1397 | | | | |
| BLAZE 440 IZQ. | 440 | 02 | | FD315 | G1397 | 2 | DF717 | W | | | FD315 | G1397 | DF716 | W | | |
| GLAMIS 440 DER. | 440 | 03 | | FD318 | G1397 | 2 | DF717 | W | | | | G1397 | | | | |
| GLAMIS 440 IZQ. | 440 | 03 | | FD315 | G1397 | 2 | DF717 | W | | | FD315 | G1397 | DF716 | W | | |
| MOTO 440 DER. | 440 | 02 | | FD318 | G1397 | 2 | DF717 | W | | | | G1397 | | | | |
| MOTO 440 IZQ. | 440 | 02 | | FD315 | G1397 | 2 | DF717 | W | | | FD315 | G1397 | DF716 | W | | |
| SPEED 440 DER. | 440 | 02 | | FD318 | G1397 | 2 | DF717 | W | | | | G1397 | | | | |
| SPEED 440 IZQ. | 440 | 02 | | FD315 | G1397 | 2 | DF717 | W | | | FD315 | G1397 | DF716 | W | | |
| **CCM 4 Wheels** | | | | | | | | | | | | | | | | |
| LX 350 4 A | 350 | 08 | | FD095 | G1397 | 2 | | | | | FD075 | G1396 | | | | |
| LX 700 4 A | 700 | 08 | | FD095 | G1397 | 2 | | | | | FD320 | G1397 | | | | |
| **CPI 4 Wheels** | | | | | | | | | | | | | | | | |
| QUAD 50 | 50 | 03 | | MF | | | - | | | | FD094 | G1054 | | | | |
| XT 50 QUAD | 50 | 06 | | MF | | | - | | | | FD117 | G1397 | | | | |
| QUAD 100 | 100 | 03 | | MF | | | - | | | | FD094 | G1054 | | | | |
| XS 250 QUAD | 250 | 06 | | FD336 | G1397 | 2 | | | | | FD117 | G1397 | | | | |
| **DAELIM 4 Wheels** | | | | | | | | | | | | | | | | |
| ET 250 QUAD | 250 | 06 | | FD094 | G1396 | 2 | | | | | FD399 | G1054 | | | | |
| ET 300 QUAD | 300 | 07 | | FD094 | G1396 | 2 | | | | | FD399 | G1054 | | | | |



**OE:** Original equipment (original replacement disc) • **OE:** Equipo original (disco de remplazo del original) For other models years previous to 1990 visit **www.galferonline.es** • Para otros modelos anteriores al año 1990 visitar **www.galferonline.es**
For consult TÜV (ABE) type approvals visit **www.galfermoto.com --> DOWNALOAD --> TÜV CERTIFICATIONS** • Para consultar las homologaciones TÜV (ABE) visitar **www.galfermoto.com --> DESCARGAS --> CERTIFICACIONES TÜV**

| BRAND & MODEL • MARCA Y MODELO / MARCA E MODELLO • MARQUE ET MODÉLE | C.C. | YEAR | | FRONT FD MF | FRONT COMPOUND RECOMMENDED | FRONT N° | FRONT DF | FRONT OE | FRONT UPGRADE 1 | FRONT UPGRADE 2 | REAR FD MF | REAR COMPOUND RECOMMENDED | REAR DF | REAR OE | REAR UPGRADE | KITS KG |
|---|---|---|---|---|---|---|---|---|---|---|---|---|---|---|---|---|
| **DERBI 4 Wheels** | | | | | | | | | | | | | | | | |
| DXR 200 | 200 | 04 | | MF | | | - | | | | FD187 | G1054 | | | | |
| DXR 250 | 250 | 04 | | MF | | | - | | | | FD187 | G1054 | | | | |
| **E-TON 4 Wheels** | | | | | | | | | | | | | | | | |
| VIPER 50 MINI / RXL 50 M | 50 | 03 | | MF | | | - | | | | FD094 | G1054 | | | | |
| VIPER 70 / RLX 70 | 70 | 03 | | MF | | | - | | | | FD094 | G1054 | | | | |
| VIPER 90 / RLX 90 | 90 | 03 | | MF | | | - | | | | FD094 | G1054 | | | | |
| VIPER 90 R / RLX 90 R | 90 | 03 | | MF | | | - | | | | FD094 | G1054 | | | | |
| CHALLENGE CLX 150 | 150 | 03 | | MF002 | G2165 | | - | | | | FD117 | G1397 | | | | |
| VIPER 150 / RLX 150 | 150 | 05 | | MF002 | G2165 | | - | | | | FD117 | G1397 | | | | |
| VIPER ST EXL 150 | 150 | 05 | | FD094 | G1054 | 2 | | | | | FD117 | G1397 | | | | |
| YUKON ST ELX 150 | 150 | 03 | | MF002 | G2165 | | - | | | | FD117 | G1397 | | | | |
| VECTOR ST 250 / 250 | 250 | 06 | | FD094 | G1054 | 2 | | | | | FD117 | G1397 | | | | |
| VECTOR ST 300 | 300 | 07 | | FD094 | G1396 | 2 | | | | | FD399 | G1054 | | | | |
| VORTEX ST 300 | 300 | 07 | | FD094 | G1396 | 2 | | | | | FD399 | G1054 | | | | |
| **FACTORY 4 Wheels** | | | | | | | | | | | | | | | | |
| MINI HELIX | 50 | 02 | | MF | | | - | | | | FD300 | G1054 | | | | |
| HELIX 50 | 50 | 02 | | MF | | | - | | | | FD075 | G1054 | | | | |
| REX 50 | 50 | 02 | | MF | | | - | | | | FD075 | G1054 | | | | |
| TORNADO 50 | 50 | 02 | | MF | | | - | | | | FD075 | G1054 | | | | |
| HELIX 100 | 100 | 02 | | MF | | | - | | | | FD075 | G1054 | | | | |
| REX 100 | 100 | 02 | | MF | | | - | | | | FD075 | G1054 | | | | |
| TORNADO 100 | 100 | 02 | | MF | | | - | | | | FD075 | G1054 | | | | |
| TORNADO 150 | 150 | 02 | | MF | | | - | | | | FD075 | G1054 | | | | |
| **GAS GAS 4 Wheels** | | | | | | | | | | | | | | | | |
| J 50 | 50 | 06 | | MF | | | - | | | | FD065 | G1054 | | | | |
| HP WILD 50 | 50 | 03 | | FD138 | G1054 | 2 | DF742 | W | | | FD138 | G1054 | DF743 | W | | |
| HP WILD 240 | 240 | 03 | | FD138 | G1054 | 2 | DF742 | W | | | FD138 | G1054 | DF743 | W | | |
| KS 250 RV IZQ. | 250 | 06 | | FD086 | G1397 | 2 | | | | | | G1397 | | | | |
| KS 250 RV DER. | 250 | 06 | | FD117 | G1397 | 2 | | | | | | | | | | |
| HP WILD 300 | 300 | 03 | | FD138 | G1396 | 2 | DF742 | W | | | FD138 | G1396 | DF743 | W | | |
| HP WILD 450 | 450 | 03 | | FD138 | G1396 | 2 | DF742 | W | | | FD138 | G1396 | DF743 | W | | |
| HP WILD 515 | 515 | 09 | | FD138 | G1396 | 2 | DF742 | W | | | FD138 | G1396 | DF743 | W | | |
| **GOES 4 Wheels** | | | | | | | | | | | | | | | | |
| GS 50 X | 50 | 08 | | FD133 | G1054 | 2 | | | | | FD133 | G1054 | | | | |
| GS 125 BIG WHEEL | 125 | 08 | | FD073 | G1054 | 2 | | | | | FD145 | G1054 | | | | |
| G 125 X | 125 | | | FD073 | G1054 | 2 | | | | | FD073 | G1054 | | | | |
| G 125 XM | 125 | | | FD164 | G1396 | 2 | | | | | FD093 | G1397 | | | | |
| G 250 XM | 125 | | | FD164 | G1396 | 2 | | | | | FD093 | G1397 | | | | |
| 350 S | 350 | | | FD094 | G1396 | 2 | | | | | FD075 | G1396 | | | | |
| 360 MAX | 360 | | | | | 2 | | | | | FD320 | G1397 | | | | |
| 520 2X4/4X4 | 520 | | | | | 2 | | | | | FD320 | G1397 | | | | |
| 520 MAX | 520 | | | | | 2 | | | | | FD320 | G1397 | | | | |
| 720 MAX | 720 | | | | | 2 | | | | | FD320 | G1397 | | | | |
| **HONDA 4 Wheels** | | | | | | | | | | | | | | | | |
| TRX 90 | 90 | 93 | 06 | MF002 | G2165 | | - | | | | MF | | - | | | |
| TRX 90 EX | 90 | 07 | 08 | MF002 | G2165 | | - | | | | MF | | - | | | |
| TRX 90 X9 | 90 | 09 | | MF002 | G2165 | | - | | | | MF | | - | | | |
| TRX 200 | 200 | 90 | 91 | MF050 | G2165 | | - | | | | MF022 | G2165 | - | | | |
| TRX 200 D T.2 | 200 | 91 | 93 | MF050 | G2165 | | - | | | | MF022 | G2165 | - | | | |
| TRX 250 EX | 250 | 01 | | FD076 | G1397 | 2 | DF712 | W | | | MF | | - | | | |
| TRX 250 R | 250 | 90 | | FD076 | G1397 | 2 | DF712 | W | | | FD076 | G1397 | DF713 | W | | |
| TRX 250 RECON | 250 | 03 | 05 | FD076 | G1397 | 2 | | | | | MF006 | G2165 | - | | | |
| TRX 250 X9 | 250 | 09 | | FD076 | G1397 | 2 | DF712 | W | | | MF006 | G2165 | - | | | |
| TRX 300 EX | 300 | 93 | 08 | FD076 | G1397 | 2 | DF712 | W | | | FD076 | G1397 | DF713 | W | | |
| TRX 300 X9 | 300 | 09 | | FD076 | G1397 | 2 | DF712 | W | | | FD076 | G1397 | | | | |
| TRX 400 EX | 400 | 99 | 08 | FD076 | G1397 | 2 | DF712 | W | | | FD076 | G1397 | DF013 | W | | |
| TRX 400 X9 | 400 | 09 | 08 | FD076 | G1397 | 2 | DF712 | W | | | FD076 | G1397 | DF013 | W | | |
| TRX 420 FOURTRAX RANCHER | 420 | 07 | | FD076 | G1397 | 2 | | | | | MF044 | G2165 | - | | | |
| TRX 420 FOURTRAX RANCHER AT | 420 | 09 | | FD076 | G1397 | 2 | | | | | FD323 | G1397 | | | | |
| TRX 450 R | 450 | 04 | 09 | FD164 | G1396 | 2 | DF712 | W | | | FD323 | G1397 | DF895 | W | | |
| TRX 500 TM/FM/FA/FGA/R | 500 | 05 | 11 | FD370 | G1397 | 2 | | | | | MF043 | G2165 | - | | | |
| TRX 500 FAC/FEC/FMC/FPAC 2/4 WD | 500 | 12 | | FD076 | G1397 | 2 | | | | | MF043 | G2165 | - | | | |
| TRX 650 RINCON | 650 | 03 | 05 | MF | | | - | | | | FD323 | G1397 | | | | |
| TRX 680 RINCON | 680 | 06 | | MF | | | - | | | | FD323 | G1397 | | | | |
| TRX 700 XX | 700 | 08 | | FD164 | G1396 | 2 | DF712 | W | | | | | | | | |
| **HUSABERG 4 Wheels** | | | | | | | | | | | | | | | | |
| EF 400 /E | 400 | 99 | | FD165 | G1396 | 2 | | | | | FD075 | G1396 | | | | |
| EF 501 /E | 500 | 99 | | FD165 | G1396 | 2 | | | | | FD075 | G1396 | | | | |
| EF 600 /E | 600 | 99 | | FD165 | G1396 | 2 | | | | | FD075 | G1396 | | | | |
| **HYOSUNG 4 Wheels** | | | | | | | | | | | | | | | | |
| TE 400 | 400 | 05 | | FD095 | G1397 | 2 | | | | | FD095 | G1397 | | | | |
| TE 450 | 450 | 06 | | FD095 | G1397 | 2 | | | | | FD095 | G1397 | | | | |

| BRAND & MODEL • MARCA Y MODELO<br>MARCA E MODELLO • MARQUE ET MODÉLE | C.C. | YEAR | | FRONT FD MF | FRONT COMPOUND RECOMMENDED | FRONT N° | FRONT DF | FRONT OE | FRONT UPGRADE 1 | FRONT UPGRADE 2 | REAR FD MF | REAR COMPOUND RECOMMENDED | REAR DF | REAR OE | REAR UPGRADE | KITS KG |
|---|---|---|---|---|---|---|---|---|---|---|---|---|---|---|---|---|
| **JINCHENG 4 Wheels** | | | | | | | | | | | | | | | | |
| JC 125 S RACCOON | 125 | 05 | | FD095 | G1397 | 2 | | | | | FD188 | G1054 | | | | |
| **KAWASAKI 4 Wheels** | | | | | | | | | | | | | | | | |
| KEF 300 LAKOTA | 300 | 95 | 00 | FD075 | G1054 | 2 | | | | | FD076 | G1397 | | | | |
| KEF 300 LAKOTA SPORT | 300 | 95 | 00 | FD075 | G1054 | 2 | | | | | FD076 | G1397 | | | | |
| KVF 300 | 300 | 99 | 03 | FD095 | G1397 | 2 | | | | | MF | | - | | | |
| KVF 300 | 300 | 13 | | FD336 | G1397 | 2 | | | | | FD336 | G1397 | | | | |
| KFX 400 | 400 | 03 | | FD076 | G1397 | 2 | DF894 | W | | | FD076 | G1397 | DF048 | W | | |
| KLF 400 B1 BAYOU LEFT/IZQ. | 400 | 93 | 99 | FD086 | G1397 | 2 | | | | | | G1397 | | | | |
| KLF 400 B1 BAYOU RIGHT/DER. | 400 | 93 | 99 | FD117 | G1397 | 2 | | | | | FD117 | G1397 | | | | |
| KVF 400 PRAIRIE | 400 | 97 | | FD095 | G1397 | 2 | | | | | MF152 | G2165 | - | | | |
| KFX 450 R LEFT/IZQ. | 450 | 07 | | FD319 | G1397 | 2 | DF731 | W | | | | G1397 | | | | |
| KFX 450 R RIGHT/DER. | 450 | 07 | | FD321 | G1397 | 2 | DF731 | W | | | FD076 | G1397 | DF869 | W | | |
| KVF 650 PRAIRIE DER. | 650 | 02 | | FD319 | G1397 | 2 | | | | | | G1397 | | | | |
| KVF 650 PRAIRIE IZQ. | 650 | 02 | | FD321 | G1397 | 2 | | | | | MF | | - | | | |
| KVF 650 BRUTE FORCE 4X4 DER. | 650 | 05 | | FD319 | G1397 | 2 | | | | | MF | | - | | | |
| KVF 650 BRUTE FORCE 4X4 IZQ. | 650 | 05 | | FD321 | G1397 | 2 | | | | | MF | | - | | | |
| KFX 700 DER. | 700 | 03 | | FD319 | G1397 | 2 | DF731 | W | | | MF | | - | | | |
| KFX 700 IZQ. | 700 | 03 | | FD321 | G1397 | 2 | DF731 | W | | | MF | | - | | | |
| KFX 700 TEAM GREEN DER. | 700 | 05 | | FD319 | G1397 | 2 | DF731 | W | | | MF | | - | | | |
| KFX 700 TEAM GREEN IZQ. | 700 | 05 | | FD321 | G1397 | 2 | DF731 | W | | | MF | | - | | | |
| KSV 700 IZQ | 700 | 04 | 11 | FD319 | G1397 | 2 | | | | | MF | | - | | | |
| KSV 700 DER | 700 | 04 | 11 | FD321 | G1397 | 2 | | | | | MF | | - | | | |
| KVF 700 IZQ D1 | 700 | 05 | | FD319 | G1397 | 2 | | | | | MF | | - | | | |
| KVF 700 DER D1 | 700 | 05 | | FD321 | G1397 | 2 | | | | | MF | | - | | | |
| KFX 750 BRUTE FORCE 4X4 DER. | 750 | 04 | | FD117 | G1397 | 2 | | | | | | G1397 | | | | |
| KFX 750 BRUTE FORCE 4X4 IZQ. | 750 | 04 | | FD086 | G1397 | 2 | | | | | MF | | - | | | |
| KRF 750 (TODOS) DER. | 750 | 08 | | FD117 | G1397 | 2 | | | | | MF | | - | | | |
| KRF 750 (TODOS) IZQ. | 750 | 08 | | FD086 | G1397 | 2 | | | | | MF | | - | | | |
| KVF 750 DER. | 750 | 08 | | FD117 | G1397 | 2 | | | | | MF | | - | | | |
| KVF 750 IZQ. | 750 | 08 | | FD086 | G1397 | 2 | | | | | MF | | - | | | |
| **KASEA 4 Wheels** | | | | | | | | | | | | | | | | |
| KS 90 | 90 | 03 | | MF | | | - | | | | FD086 | G1397 | | | | |
| KU 90 | 90 | 03 | | MF | | | - | | | | FD086 | G1397 | | | | |
| SKYHAWK 125 | 125 | 03 | | MF | | | - | | | | FD086 | G1397 | | | | |
| KS 150 | 150 | 03 | | MF | | | - | | | | FD086 | G1397 | | | | |
| KU 150 | 150 | 03 | | MF | | | - | | | | FD086 | G1397 | | | | |
| SKYHAWK 170 | 170 | 03 | | MF | | | - | | | | FD086 | G1397 | | | | |
| SKYHAWK 250 | 250 | 03 | | MF | | | - | | | | FD086 | G1397 | | | | |
| **KEEWAY 4 Wheels** | | | | | | | | | | | | | | | | |
| DRAGON 250 | 250 | 08 | | FD094 | G1054 | 2 | | | | | FD095 | G1397 | | | | |
| **KTM 4 Wheels** | | | | | | | | | | | | | | | | |
| 450 SX | 450 | 08 | | FD407 | G1397 | 2 | | | | | FD408 | G1397 | | | | |
| 450 XC | 450 | 08 | | FD407 | G1397 | 2 | | | | | FD408 | G1397 | | | | |
| 505 SX | 505 | 08 | | FD407 | G1397 | 2 | | | | | FD408 | G1397 | | | | |
| 525 XC | 525 | 08 | | FD407 | G1397 | 2 | | | | | FD408 | G1397 | | | | |
| **KYMCO 4 Wheels** | | | | | | | | | | | | | | | | |
| Mxer 50 | 50 | 03 | | MF002 | G2165 | | - | | | | FD261 | G1397 | | | | |
| MXU 50 | 50 | 06 | | MF | | | - | | | | FD261 | G1397 | | | | |
| MAXXER 90 | 90 | 05 | | MF | | | - | | | | FD261 | G1397 | | | | |
| Mxer 150 | 150 | 03 | | MF002 | G2165 | | - | | | | FD261 | G1397 | | | | |
| MXU 150 | 150 | 06 | | MF | | | - | | | | FD261 | G1397 | | | | |
| MXU 150 | 150 | 05 | | MF | | | - | | | | FD095 | G1397 | | | | |
| KXR 250 SPORT | 250 | 04 | | FD336 | G1397 | 2 | DF878 | W | | | FD275 | G1397 | DF879 | W | | |
| MAXXER 250 | 250 | 06 | | FD336 | G1397 | 2 | DF878 | W | | | FD275 | G1397 | | | | |
| MXU 250 | 250 | 05 | | FD336 | G1397 | 2 | DF878 | W | | | FD275 | G1397 | DF879 | W | | |
| URBAN QUAD 250 | 250 | 06 | | FD336 | G1397 | 2 | DF878 | W | | | FD275 | G1397 | DF879 | W | | |
| MAXXER 300 | 300 | 06 | | FD336 | G1397 | 2 | DF878 | W | | | FD275 | G1397 | | | | |
| MXU 300 | 300 | 05 | | FD336 | G1397 | 2 | DF878 | W | | | FD275 | G1397 | DF879 | W | | |
| MXU 300 R | 300 | 10 | | FD336 | G1397 | 2 | DF878 | W | | | FD336 | G1397 | DF879 | W | | |
| MAXXER 400 | 400 | 09 | | FD353 | G1397 | 2 | | | | | FD353 | G1397 | | | | |
| MXU 400 | 400 | 08 | | FD353 | G1397 | 2 | | | | | FD353 | G1397 | | | | |
| MAXXER 450 | 450 | 10 | | FD353 | G1397 | 2 | | | | | FD353 | G1397 | | | | |
| MXU 450 i IRS | 450 | 11 | 12 | FD353 | G1397 | 2 | | | | | FD353 | G1397 | | | | |
| MXU 450 i | 450 | 13 | | FD353 | G1397 | 2 | | | | | FD353 | G1397 | | | | |
| MXU 500 | 500 | 06 | | FD336 | G1397 | 2 | DF878 | W | | | FD336 | G1397 | | | | |
| MXU 500 IRS | 500 | 09 | | FD336 | G1397 | 2 | DF878 | W | | | FD353 | G1397 | | | | |
| **LAVERDA 4 Wheels** | | | | | | | | | | | | | | | | |
| QUASAR 125 HP | 125 | 04 | | MF | | | - | | | | FD302 | G1397 | | | | |
| QUASAR 180 HP | 180 | 04 | | MF | | | - | | | | FD302 | G1397 | | | | |
| QUASAR 400 4X4 | 400 | 04 | | FD302 | G1397 | 2 | | | | | FD302 | G1397 | | | | |
| QUASAR 500 4X4 | 500 | 04 | | FD302 | G1397 | 2 | | | | | FD302 | G1397 | | | | |
| **LINHAI 4 Wheels** | | | | | | | | | | | | | | | | |



**OE:** Original equipment (original replacement disc) • **OE:** Equipo original (disco de remplazo del original) For other models years previous to 1990 visit **www.galferonline.es** • Para otros modelos anteriores al año 1990 visitar **www.galferonline.es**
For consult TÜV (ABE) type approvals visit **www.galfermoto.com --> DOWNLOAD --> TÜV CERTIFICATIONS** • Para consultar las homologaciones TÜV (ABE) visitar **www.galfermoto.com --> DESCARGAS --> CERTIFICACIONES TÜV**

| BRAND & MODEL • MARCA Y MODELO / MARCA E MODELLO • MARQUE ET MODÉLE | C.C. | YEAR | | FRONT FD MF | FRONT COMPOUND RECOMMENDED | FRONT N° | FRONT DF | FRONT OE | FRONT UPGRADE 1 | FRONT UPGRADE 2 | REAR FD MF | REAR COMPOUND RECOMMENDED | REAR DF | REAR OE | REAR UPGRADE | KITS KG |
|---|---|---|---|---|---|---|---|---|---|---|---|---|---|---|---|---|
| GOON 260 | 260 | 07 | | | | 2 | | | | | FD301 | G1397 | | | | |
| **MACBOR 4 Wheels** | | | | | | | | | | | | | | | | |
| CX 50 | 50 | 05 | | MF | | | - | | | | FD075 | G1054 | | | | |
| CX 250 / R | 250 | 05 | | MF | | | - | | | | FD187 | G1054 | | | | |
| ZX 250 | 250 | 06 | | FD303 | G1397 | 2 | | | | | FD303 | G1397 | | | | |
| **MASAI 4 Wheels** | | | | | | | | | | | | | | | | |
| L 50 | 50 | 05 | | MF | | | - | | | | FD075 | G1054 | | | | |
| L 100 | 100 | 05 | | MF | | | - | | | | FD075 | G1054 | | | | |
| L 150 | 150 | 05 | | MF | | | - | | | | FD075 | G1054 | | | | |
| A 300 QUAD | 300 | 05 | | FD094 | G1396 | 2 | | | | | FD275 | G1397 | | | | |
| A 450 QUAD | 450 | 05 | | FD094 | G1396 | 2 | | | | | FD275 | G1397 | | | | |
| **METRAKIT 4 Wheels** | | | | | | | | | | | | | | | | |
| QUARK 50 | 50 | 05 | | MF | | | - | | | | FD075 | G1054 | | | | |
| QUARK 100 | 100 | 05 | | MF | | | - | | | | FD075 | G1054 | | | | |
| P.G.O. 4 Wheels | | | | | | | | | | | | | | | | |
| X-RIDER 50 | 50 | 03 | | MF | | | - | | | | FD094 | G1054 | | | | |
| X-RIDER 90 | 90 | 05 | | MF | | | - | | | | FD094 | G1054 | | | | |
| X-RIDER 110 | 110 | 05 | | MF | | | - | | | | FD094 | G1054 | | | | |
| X-RIDER 150 | 150 | 03 | | MF | | | - | | | | FD094 | G1054 | | | | |
| **POLARIS 4 Wheels** | | | | | | | | | | | | | | | | |
| HAWKEYE 300 2X4/4X4 | 300 | 06 | 06 | FD353 | G1397 | 2 | | | | | FD353 | G1397 | | | | |
| HAWKEYE 300 2X4/4X4 | 300 | 07 | | FD303 | G1397 | 2 | | | | | FD303 | G1397 | | | | |
| XPRESS 300 | 300 | 96 | 00 | FD303 | G1397 | 2 | | | | | FD300 | G1397 | | | | |
| XPEDITION 325 | 325 | 00 | | FD303 | G1397 | 2 | DF722 | W | | | FD301 | G1397 | DF725 | W | | |
| MAGNUM 325 All Models | 325 | 00 | 01 | FD303 | G1397 | 2 | DF722 | W | | | FD301 | G1397 | DF735 | | | |
| MAGNUM 325 All Models | 325 | 02 | | FD303 | G1397 | 2 | DF722 | W | | | FD317 | G1397 | | | | |
| MAGNUM 330 All Models | 330 | 03 | | FD303 | G1397 | 2 | | | | | FD317 | G1397 | | | | |
| SPORTSMAN 335 | 335 | 99 | 00 | FD303 | G1397 | 2 | | | | | FD301 | G1397 | | | | |
| SPORTSMAN 350 | 350 | 93 | | FD303 | G1397 | 2 | | | | | FD300 | G1397 | | | | |
| RANGER 400 | 400 | 10 | | FD403 | G1397 | 2 | | | | | FD322 | G1397 | | | | |
| SPORT 400 | 400 | 94 | 98 | FD303 | G1397 | 2 | | | | | FD300 | G1397 | | | | |
| SPORT 400 | 400 | 99 | | FD303 | G1397 | 2 | | | | | FD301 | G1397 | DF725 | W | | |
| SPORTSMAN 400 | 400 | 00 | 02 | FD303 | G1397 | 2 | | | | | FD301 | G1397 | | | | |
| SPORTSMAN 400 | 400 | 03 | | FD303 | G1397 | 2 | | | | | FD317 | G1397 | | | | |
| SPORTSMAN 400 | 400 | 94 | 97 | FD303 | G1397 | 2 | | | | | FD300 | G1397 | | | | |
| SPORTSMAN 400 HO 4X4 | 400 | 08 | 10 | FD303 | G1397 | 2 | | | | | FD303 | G1397 | | | | |
| SPORTSMAN 400 HO 4X4 | 400 | 11 | | FD303 | G1397 | 2 | | | | | | | | | | |
| MAGNUM 425 All Models 2X4 | 425 | 95 | 97 | FD303 | G1397 | 2 | | | | | FD300 | G1397 | | | | |
| MAGNUM 425 All Models 4X4 | 425 | 95 | 97 | FD303 | G1397 | 2 | | | | | FD300 | G1397 | | | | |
| XPEDITION 425 | 425 | 00 | | FD303 | G1397 | 2 | | | | | FD301 | G1397 | DF725 | W | | |
| OUTLAW 450 S | 450 | 08 | | FD404 | G1397 | 2 | | | | | FD303 | G1397 | | | | |
| SPORTSMAN 450 | 450 | 06 | 06 | FD303 | G1397 | 2 | DF722 | W | | | FD317 | G1397 | | | | |
| SPORTSMAN 450 | 450 | 07 | | FD303 | G1397 | 2 | DF722 | W | | | FD317 | G1397 | | | | |
| MAGNUM 500 All Models | 500 | 99 | 01 | FD303 | G1397 | 2 | | | | | FD301 | G1397 | DF725 | W | | |
| MAGNUM 500 All Models | 500 | 02 | | FD303 | G1397 | 2 | | | | | FD317 | G1397 | | | | |
| PREDATOR 500 | 500 | 03 | | FD303 | G1397 | 2 | DF898 | W | | | FD303 | G1397 | DF899 | W | | |
| RANGER 500 2X4/4X4 | 500 | 02 | 07 | FD322 | G1397 | 2 | | | | | FD322 | G1397 | | | | |
| RANGER 500 2X4/4X4 efi | 500 | 08 | | FD403 | G1397 | 2 | DF722 | W | | | FD322 | G1397 | | | | |
| SCRAMBLER 500 2X4 | 500 | 07 | | FD303 | G1397 | 2 | DF722 | W | | | FD317 | G1397 | DF725 | W | | |
| SCRAMBLER 500 4X4 | 500 | 07 | | FD303 | G1397 | 2 | | | | | FD317 | G1397 | DF725 | W | | |
| SPORTSMAN 500 | 500 | 96 | 97 | FD303 | G1397 | 2 | | | | | FD300 | G1397 | | | | |
| SPORTSMAN 500 | 500 | 98 | 02 | FD303 | G1397 | 2 | | | | | FD301 | G1397 | | | | |
| SPORTSMAN 500 | 500 | 03 | | FD303 | G1397 | 2 | | | | | FD317 | G1397 | | | | |
| SPORTSMAN 500 FOREST | 500 | 12 | | FD303 | G1397 | 2 | | | | | FD317 | G1397 | | | | |
| SPORTSMAN 500 TOUNING HO | 500 | 08 | 10 | FD303 | G1397 | 2 | | | | | FD303 | G1397 | | | | |
| SPORTSMAN 500 TOUNING HO | 500 | 11 | | FD303 | G1397 | 2 | | | | | | | | | | |
| OUTLAW 525 S | 525 | 08 | | FD404 | G1397 | 2 | | | | | FD303 | G1397 | | | | |
| OUTLAW 525 IRS | 525 | 08 | | FD404 | G1397 | 2 | | | | | FD303 | G1397 | | | | |
| RANGER 700 6X4 efi | 700 | 08 | | FD403 | G1397 | 2 | DF722 | W | | | FD322 | G1397 | | | | |
| RANGER 700 XP 4X4 efi | 700 | 08 | | FD403 | G1397 | 2 | DF722 | W | | | FD322 | G1397 | | | | |
| SPORTSMAN 700 | 700 | 02 | | FD303 | G1397 | 2 | | | | | FD317 | G1397 | | | | |
| RANGER 800 6X6 | 800 | 10 | | FD403 | G1397 | 2 | | | | | FD322 | G1397 | | | | |
| RANGER 800 CREW | 800 | 10 | | FD403 | G1397 | 2 | | | | | FD322 | G1397 | | | | |
| RANGER 800 HD | 800 | 10 | | FD403 | G1397 | 2 | | | | | FD322 | G1397 | | | | |
| RANGER 800 RZR | 800 | 08 | | FD404 | G1397 | 2 | | | | | FD303 | G1397 | | | | |
| RANGER 800 RZR-4 EPS | 800 | 12 | | FD403 | G1397 | 2 | | | | | FD322 | G1397 | | | | |
| RANGER 800 XP | 800 | 10 | | FD403 | G1397 | 2 | | | | | FD322 | G1397 | | | | |
| SPORTSMAN 800 efi | 800 | 07 | | FD303 | G1397 | 2 | DF722 | W | | | FD317 | G1397 | | | | |
| SPORTSMAN 800 X2 efi | 800 | 07 | | FD303 | G1397 | 2 | DF722 | W | | | FD303 | G1397 | | | | |
| RANGER 900 RZR XP | 900 | 12 | | FD403 | G1397 | 2 | | | | | FD322 | G1397 | | | | |
| SCRAMBLER All Models | | 95 | 97 | FD303 | G1397 | 2 | | | | | FD300 | G1397 | | | | |
| SCRAMBLER All Models | | 98 | 06 | FD303 | G1397 | 2 | DF722 | W | | | FD301 | G1397 | DF725 | W | | |
| TRAIL BLAZER All Models | | 90 | 98 | FD303 | G1397 | 2 | | | | | FD300 | G1397 | | | | |

| BRAND & MODEL • MARCA Y MODELO<br>MARCA E MODELLO • MARQUE ET MODÉLE | C.C. | YEAR | | FRONT FD MF | FRONT COMPOUND RECOMMENDED | FRONT N° | FRONT DF | FRONT OE | FRONT UPGRADE 1 | FRONT UPGRADE 2 | REAR FD MF | REAR COMPOUND RECOMMENDED | REAR DF | REAR OE | REAR UPGRADE | KITS KG |
|---|---|---|---|---|---|---|---|---|---|---|---|---|---|---|---|---|
| TRAIL BLAZER All Models | | 99 | | FD303 | G1397 | 2 | DF722 | W | | | FD301 | G1397 | DF725 | W | | |
| TRAIL BOSS All Models | | 00 | | FD303 | G1397 | 2 | | | | | FD301 | G1397 | | | | |
| XPLORER All Models | | 95 | 99 | FD303 | G1397 | 2 | | | | | FD300 | G1397 | | | | |
| XPLORER All Models | | 00 | | FD303 | G1397 | 2 | | | | | FD301 | G1397 | | | | |
| **POLARIS SNOW** | | | | | | | | | | | | | | | | |
| WILDWOOD BRAKES TODOS | | 01 | | | | | | | | | FD182 | G1054 | | | | |
| **ROXON 4 Wheels** | | | | | | | | | | | | | | | | |
| RX 150 | 150 | 04 | | MF | | | - | | | | FD094 | G1054 | | | | |
| SPORT SPIRIT 150 | 150 | 04 | | MF | | | - | | | | FD094 | G1054 | | | | |
| **SACHS 4 Wheels** | | | | | | | | | | | | | | | | |
| 4 ROCK 250 | 250 | 04 | | MF | | | - | | | | FD187 | G1054 | | | | |
| **SUZUKI 4 Wheels** | | | | | | | | | | | | | | | | |
| LT F-160 M/N/P | 160 | 91 | 93 | MF | | | - | | | | MF323 | G2165 | - | | | |
| LT 250 F OZARK | 250 | 02 | | FD095 | G1397 | 2 | | | | | MF | | - | | | |
| LT Z-250 K4 QUAD SPORT | 250 | 04 | | FD095 | G1397 | 2 | | | | | MF | | - | | | |
| LT F-4WDXM/N/P | 250 | 91 | 93 | MF342 | G2165 | | - | | | | MF331 | G2165 | - | | | |
| LTF 300 DER. | 300 | 02 | | FD117 | G1397 | 2 | | | | | MF321 | G2165 | - | | | |
| LTF 300 IZQ. | 300 | 02 | | FD086 | G1397 | 2 | | | | | MF321 | G2165 | - | | | |
| LT A-400 | 400 | 02 | | FD095 | G1397 | 2 | | | | | MF | | - | | | |
| LT A 400 DER. KING QUAD | 400 | 08 | | FD315 | G1397 | 2 | | | | | MF | | - | | | |
| LT A 400 IZQ. KING QUAD | 400 | 08 | | FD318 | G1397 | 2 | | | | | MF | | - | | | |
| LT F 400 DER. KING QUAD | 400 | 08 | | FD315 | G1397 | 2 | | | | | MF | | - | | | |
| LT F 400 IZQ. KING QUAD | 400 | 08 | | FD318 | G1397 | 2 | | | | | MF | | - | | | |
| LTF 400 EGER | 400 | 02 | 07 | FD095 | G1397 | 2 | | | | | MF | | - | | | |
| LT Z 400 | 400 | 03 | | FD076 | G1397 | 2 | DF894 | W | | | FD076 | G1397 | DF048 | W | | |
| LT A 450 LEFT/IZQ. | 450 | 07 | | FD319 | G1397 | 2 | | | | | | G1397 | | | | |
| LT A 450 RIGHT/DER. | 450 | 07 | | FD321 | G1397 | 2 | | | | | | | | | | |
| LT R 450 LEFT/IZQ. | 450 | 06 | | FD086 | G1397 | 2 | DF733 | W | | | | G1397 | | | | |
| LT R 450 RIGHT/DER. | 450 | 06 | | FD117 | G1397 | 2 | DF733 | W | | | FD076 | G1397 | DF734 | W | | |
| LT 500 RH,RJ,RK,RL,RM,RN | 500 | 91 | 93 | FD075 | G1054 | 2 | | | | | | | | | | |
| LT-F/A 500 F QUADRUNNER LEFT/IZQ. | 500 | 98 | 02 | FD086 | G1397 | 2 | | | | | FD318 | G1397 | | | | |
| LT-F/A 500 F QUADRUNNER RIGHT/DER. | 500 | 98 | 02 | FD117 | G1397 | 2 | | | | | | G1397 | | | | |
| LT F 500 VINSON | 500 | 09 | | FD095 | G1397 | 2 | | | | | | | | | | |
| LT-A 700 KING QUAD LEFT/IZQ. | 700 | 05 | | FD315 | G1397 | 2 | | | | | | G1397 | | | | |
| LT-A 700 KING QUAD RIGHT/DER. | 700 | 05 | | FD318 | G1397 | 2 | | | | | MF | | - | | | |
| LT-V 700 TWIN PEAKS LEFT/IZQ. | 700 | 04 | | FD319 | G1397 | 2 | | | | | | G1397 | | | | |
| LT-V 700 TWIN PEAKS RIGHT/DER. | 700 | 04 | | FD321 | G1397 | 2 | | | | | MF | | - | | | |
| **SYM 4 Wheels** | | | | | | | | | | | | | | | | |
| TRACKRUNNER 200 | 200 | 05 | | FD336 | G1397 | 2 | | | | | FD399 | G1054 | | | | |
| QUADLANDER 250 | 250 | 05 | | FD336 | G1397 | 2 | | | | | FD336 | G1397 | | | | |
| CITYMAX 300 | 300 | 06 | | FD336 | G1397 | 2 | | | | | FD399 | G1054 | | | | |
| QUADRAIDER 600 | 600 | 06 | 09 | FD095 | G1397 | 2 | | | | | FD336 | G1397 | | | | |
| QUADRAIDER 600 LE | 600 | 10 | | FD336 | G1397 | 2 | | | | | FD336 | G1397 | | | | |
| **TGB 4 Wheels** | | | | | | | | | | | | | | | | |
| HORNET 50 | 50 | 04 | | MF | | | - | | | | FD094 | G1054 | | | | |
| HORNET 90 | 90 | 04 | | MF | | | - | | | | FD094 | G1054 | | | | |
| 101 S | 100 | 06 | | FD094 | G1054 | 2 | | | | | MF453 | G2165 | - | | | |
| QUADBLADE 250 | 250 | 06 | | FD075 | G1054 | 2 | | | | | FD094 | G1054 | | | | |
| QUADBLADE 325 | 325 | 07 | | FD075 | G1054 | 2 | | | | | FD094 | G1396 | | | | |
| AVENGER 400 | 400 | 07 | | FD336 | G1397 | 2 | | | | | FD336 | G1397 | | | | |
| QUADBLADE 400 | 400 | 06 | | FD075 | G1054 | 2 | | | | | FD117 | G1397 | | | | |
| OUTBACK 425 | 425 | 07 | | FD336 | G1397 | 2 | | | | | FD336 | G1397 | | | | |
| QUADBLADE 425 | 425 | 07 | | FD336 | G1397 | 2 | | | | | FD336 | G1397 | | | | |
| **YAMAHA 4 Wheels** | | | | | | | | | | | | | | | | |
| YFM 80 D SHIFT | 80 | 92 | | MF458 | G2165 | | - | | | | MF451 | G2165 | - | | | |
| YFM 80 E | 80 | 93 | | MF458 | G2165 | | - | | | | | G1397 | | | | |
| YFA 1B 125 BREEZE | 125 | 91 | | MF458 | G2165 | | - | | | | MF451 | G2165 | - | | | |
| YFA 1B 125 BREEZE (KIT YAMAHA FR.) | 125 | 91 | | MF458 | G2165 | | - | | | | FD220 | G1054 | DF729 | W | | |
| YFA 1D/E | 125 | 92 | 93 | MF458 | G2165 | | - | | | | | G1397 | | | | |
| YFS 200 R BLASTER | 200 | 03 | | FD095 | G1397 | 2 | DF477 | W | | | FD076 | G1397 | DF476 | W | | |
| YFB 250 D/E TIMB | 250 | 92 | 93 | MF458 | G2165 | | - | | | | MF471 | G2165 | - | | | |
| YFM 250 | 250 | 01 | | FD095 | G1397 | 2 | DF477 | W | | | MF | | - | | | |
| YFM 250 R RAPTOR IZQ/LEFT | 250 | 08 | | FD378 | G1397 | 2 | | | | | | G1397 | | | | |
| YFM 250 R RAPTOR DER/RIGHT | 250 | 08 | | FD379 | G1397 | 2 | | | | | FD076 | G1397 | | | | |
| YFM 250 X BEAR TRACKER | 250 | 01 | | FD095 | G1397 | 2 | | | | | MF | | - | | | |
| YFM 250 BRUIN | 250 | 05 | 06 | FD095 | G1397 | 2 | | | | | MF | | - | | | |
| YFM BIG BEAR | 250 | 07 | | FD095 | G1397 | 2 | | | | | MF | | - | | | |
| YFM 350 BRUIN87 | 350 | 04 | | FD095 | G1397 | 2 | | | | | MF | | - | | | |
| YFM 350 FGW GRIZZLY | 350 | 07 | | FD076 | G1397 | 2 | | | | | MF | | - | | | |
| YFM 350 FWB BIG BEAR | 350 | 99 | | FD095 | G1397 | 2 | | | | | MF457 | G2165 | - | | | |
| YFM 350 R RAPTOR | 350 | 04 | | FD076 | G1397 | 2 | | | | | FD076 | G1397 | | | | |
| YFM 350 WOLVERINE | 350 | 95 | | FD095 | G1397 | 2 | | | | | FD076 | G1397 | DF476 | W | | |
| YFZ 350 A,B,D,E BANSHEE | 350 | 90 | 06 | FD095 | G1397 | 2 | DF477 | W | | | FD095 | G1397 | DF476 | W | | |



**OE:** Original equipment (original replacement disc) • **OE:** Equipo original (disco de remplazo del original) For other models years previous to 1990 visit **www.galferonline.es** • Para otros modelos anteriores al año 1990 visitar **www.galferonline.es**
For consult TÜV (ABE) type approvals visit **www.galfermoto.com --> DOWNALOAD --> TÜV CERTIFICATIONS** • Para consultar las homologaciones TÜV (ABE) visitar **www.galfermoto.com --> DESCARGAS --> CERTIFICACIONES TÜV**

| BRAND & MODEL • MARCA Y MODELO<br>MARCA E MODELLO • MARQUE ET MODÉLE | C.C. | YEAR | | FRONT FD MF | FRONT COMPOUND RECOMMENDED | FRONT N° | FRONT DF | FRONT OE | FRONT UPGRADE 1 | FRONT UPGRADE 2 | REAR FD MF | REAR COMPOUND RECOMMENDED | REAR DF | REAR OE | REAR UPGRADE | KITS KG |
|---|---|---|---|---|---|---|---|---|---|---|---|---|---|---|---|---|
| YFM 400 FGW GRIZZLY | 400 | 07 | | FD076 | G1397 | 2 | DF477 | W | | | FD315 | G1397 | | | | |
| YFM 400 FW BIG BEAR | 400 | 00 | | FD095 | G1397 | 2 | | | | | MF457 | G2165 | - | | | |
| YFM 400 FWA KODIAK | 400 | 00 | | FD095 | G1397 | 2 | | | | | FD318 | G1397 | | | | |
| YFM 400 FWE KODIAK | 400 | 93 | 99 | MF482 | G2165 | | - | | | | MF457 | G2165 | - | | | |
| YFM 400 TODOS MODELOS | 400 | 00 | | FD095 | G1397 | 2 | | | | | MF457 | G2165 | - | | | |
| YFM 450 | 450 | 03 | | FD086 | G1397 | 2 | | | | | FD076 | G1397 | | | | |
| YFM 450 FW GRIZZLY | 450 | 07 | | FD076 | G1397 | 2 | | | | | FD315 | G1397 | | | | |
| YFM 450 GRIZZLY IRS | 450 | 10 | | FD095 | G1397 | 2 | | | | | | | | | | |
| YFM 450 GRIZZLY EPS | 450 | 11 | | FD095 | G1397 | 2 | | | | | | | | | | |
| YFM 450 KODIAK | 450 | 03 | | FD095 | G1397 | 2 | | | | | FD315 | G1397 | | | | |
| YFM 450 WOLVERINE IZQ. | 450 | 06 | | FD086 | G1397 | 2 | | | | | | G1397 | | | | |
| YFM 450 WOLVERINE DER. | 450 | 06 | | FD117 | G1397 | 2 | | | | | FD315 | G1397 | | | | |
| YFZ 450 R IZQ/LEFT | 450 | 09 | | FD117 | G1397 | 2 | | | | | | G1397 | | | | |
| YFZ 450 R DER/RIGHT | 450 | 09 | | FD086 | G1397 | 2 | | | | | FD284 | G1054 | | | | |
| YFZ 450 S DER. | 450 | 03 | 05 | FD117 | G1397 | 2 | DF477 | W | | | | G1397 | | | | |
| YFZ 450 S IZQ. | 450 | 03 | 05 | FD086 | G1397 | 2 | DF477 | W | | | FD076 | G1397 | DF730 | W | | |
| YFZ 450 S DER. | 450 | 06 | | FD117 | G1397 | 2 | DF477 | W | | | | G1397 | | | | |
| YFZ 450 S IZQ. | 450 | 06 | | FD086 | G1397 | 2 | DF477 | W | | | FD063 | G1397 | DF732 | W | | |
| YFZ 450 R/V DER. | 450 | 06 | | FD117 | G1397 | 2 | DF477 | W | | | | | | | | |
| YFZ 450 R/V IZQ. | 450 | 06 | | FD086 | G1397 | 2 | DF477 | W | | | FD284 | G1380 | | | | |
| YFM 550 GRIZZLY IZQ./LEFT | 550 | 09 | | FD378 | G1397 | 2 | | | | | FD380 | G1397 | | | | |
| YFM 550 GRIZZLY DER./RIGHT | 550 | 09 | | FD379 | G1397 | 2 | | | | | FD381 | G1397 | | | | |
| YFM 600 GRIZZLY/HUNTING | 600 | 98 | 01 | FD076 | G1397 | 2 | | | | | MF457 | G2165 | - | | | |
| YFM 600 FWA HUNTER | 600 | 01 | | FD076 | G1397 | 2 | | | | | MF457 | G2165 | - | | | |
| YFM 660 GRIZZLY | 660 | 02 | | FD076 | G1397 | 2 | | | | | FD320 | G1397 | | | | |
| YFM 660 R RAPTOR | 660 | 01 | | FD076 | G1397 | 2 | DF477 | W | | | FD076 | G1397 | DF476 | W | | |
| YXR 660 RHINO 4X4 IZQ./LEFT | 660 | 04 | | FD117 | G1397 | 2 | DF841 | W | | | | G1397 | | | | |
| YXR 660 RHINO 4X4 DER./RIGHT | 660 | 04 | | FD086 | G1397 | 2 | DF841 | W | | | FD318 | G1397 | DF842 | W | | |
| YFM 700 GRIZZLY IZQ./LEFT | 700 | 07 | | FD378 | G1397 | 2 | | | | | FD380 | G1397 | | | | |
| YFM 700 GRIZZLY DER./RIGHT | 700 | 07 | | FD379 | G1397 | 2 | | | | | FD381 | G1397 | | | | |
| YFM 700 R RAPTOR IZQ./LEFT | 700 | 06 | 12 | FD086 | G1397 | 2 | DF477 | W | | | | G1397 | | | | |
| YFM 700 R RAPTOR DER./RIGHT | 700 | 06 | 12 | FD117 | G1397 | 2 | DF477 | W | | | FD318 | G1397 | DF732 | W | | |
| YFM 700 R RAPTOR IZQ./LEFT | 700 | 13 | | FD086 | G1397 | 2 | DF477 | W | | | | G1397 | | | | |
| YFM 700 R RAPTOR DER./RIGHT | 700 | 13 | | FD117 | G1397 | 2 | DF477 | W | | | FD284 | G1054 | DF732 | W | | |
| YXR 700 RHINO 4X4 IZQ./LEFT | 700 | 08 | | FD117 | G1397 | 2 | DF841 | W | | | | G1397 | | | | |
| YXR 700 RHINO 4X4 DER./RIGHT | 700 | 08 | | FD086 | G1397 | 2 | DF841 | W | | | | G1397 | | | | |
| **YAMAHA SNOW** | | | | | | | | | | | | | | | | |
| V-MAX | | 92 | 96 | | | | | | | | FD184 | G1054 | | | | |

## FD 063

mm 81,8 x 42,3 — A | 7,2 — A

G1054 | G1805 | G1397 |

| BRAND MARCA | MODEL MODELO | C.C. | YEAR | FRONT | REAR |
|---|---|---|---|---|---|
| **YAMAHA 4 Wheels** | | | | | |
| YAMAHA | YFZ 450 S IZQ. | 450 | 06- | FD086 | FD063 |

## FD 065

mm 36,0 x 45,0 — A | 6,0 — A

G1054 | G1805 | G1380 |

| BRAND MARCA | MODEL MODELO | C.C. | YEAR | FRONT | REAR |
|---|---|---|---|---|---|
| **GAS GAS 4 Wheels** | | | | | |
| GAS GAS | J 50 | 50 | 06- | MF | FD065 |

## FD 073

mm 77,4 x 42,3 — A | 7,0 — A

G1054 | G1805 |

| BRAND MARCA | MODEL MODELO | C.C. | YEAR | FRONT | REAR |
|---|---|---|---|---|---|
| **BLANEY 4 Wheels** | | | | | |
| BLANEY | XC 125 TROJAN | 125 | 03- | MF | FD073 |
| **CAN-AM 4 Wheels** | | | | | |
| CAN-AM | RALLY 200 | 200 | 07- | FD073 | FD315 |
| **GOES 4 Wheels** | | | | | |
| GOES | GS 125 BIG WHEEL | 125 | 08- | FD073 | FD145 |
| GOES | G 125 X | 125 | - | FD073 | FD073 |

## FD 075

mm 55,8 x 37,2 — A | 10,0 — B

mm 85,0 x 42,1 — A | 8,0 — B

G1054 | G1805 | G1396 |

| BRAND MARCA | MODEL MODELO | C.C. | YEAR | FRONT | REAR |
|---|---|---|---|---|---|
| **CCM 4 Wheels** | | | | | |
| CCM | LX 350 4 A | 350 | 08- | FD095 | FD075 |
| **FACTORY 4 Wheels** | | | | | |
| FACTORY | HELIX 50 | 50 | 02- | MF | FD075 |
| FACTORY | REX 50 | 50 | 02- | MF | FD075 |
| FACTORY | TORNADO 50 | 50 | 02- | MF | FD075 |
| FACTORY | HELIX 100 | 100 | 02- | MF | FD075 |
| FACTORY | REX 100 | 100 | 02- | MF | FD075 |
| FACTORY | TORNADO 100 | 100 | 02- | MF | FD075 |
| FACTORY | TORNADO 150 | 150 | 02- | MF | FD075 |
| **GOES 4 Wheels** | | | | | |
| GOES | 350 S | 350 | - | FD094 | FD075 |
| **HUSABERG 4 Wheels** | | | | | |
| HUSABERG | EF 400 /E | 400 | 99- | FD165 | FD075 |
| HUSABERG | EF 501 /E | 500 | 99- | FD165 | FD075 |
| HUSABERG | EF 600 /E | 600 | 99- | FD165 | FD075 |
| **KAWASAKI 4 Wheels** | | | | | |
| KAWASAKI | KEF 300 LAKOTA | 300 | 95-00 | FD075 | FD076 |
| KAWASAKI | KEF 300 LAKOTA SPORT | 300 | 95-00 | FD075 | FD076 |
| **MACBOR 4 Wheels** | | | | | |
| MACBOR | CX 50 | 50 | 05- | MF | FD075 |
| **MASAI 4 Wheels** | | | | | |
| MASAI | L 50 | 50 | 05- | MF | FD075 |
| MASAI | L 100 | 100 | 05- | MF | FD075 |
| MASAI | L 150 | 150 | 05- | MF | FD075 |
| **METRAKIT 4 Wheels** | | | | | |
| METRAKIT | QUARK 50 | 50 | 05- | MF | FD075 |
| METRAKIT | QUARK 100 | 100 | 05- | MF | FD075 |
| **SUZUKI 4 Wheels** | | | | | |
| SUZUKI | LT 500 RH,RJ,RK,RL,RM,RN | 500 | 91-93 | FD075 | |
| **TGB 4 Wheels** | | | | | |
| TGB | QUADBLADE 250 | 250 | 06- | FD075 | FD094 |
| TGB | QUADBLADE 325 | 325 | 07- | FD075 | FD094 |
| TGB | QUADBLADE 400 | 400 | 06- | FD075 | FD117 |

## FD 076

mm 46,4 x 45,3 — A | 7,8 — A

G1054 | G1805 | G1396 | G1397

| BRAND MARCA | MODEL MODELO | C.C. | YEAR | FRONT | REAR |
|---|---|---|---|---|---|
| **HONDA 4 Wheels** | | | | | |
| HONDA | TRX 250 EX | 250 | 01- | FD076 | MF |
| HONDA | TRX 250 R | 250 | 90- | FD076 | FD076 |
| HONDA | TRX 250 RECON | 250 | 03-05 | FD076 | MF006 |
| HONDA | TRX 250 X9 | 250 | 09- | FD076 | MF006 |
| HONDA | TRX 300 EX | 300 | 93-08 | FD076 | FD076 |
| HONDA | TRX 300 X9 | 300 | 09- | FD076 | FD076 |
| HONDA | TRX 400 EX | 400 | 99-08 | FD076 | FD076 |
| HONDA | TRX 400 X9 | 400 | 09-08 | FD076 | FD076 |
| HONDA | TRX 420 FOURTRAX RANCHER | 420 | 07- | FD076 | MF044 |
| HONDA | TRX 420 FOURTRAX RANCHER AT | 420 | 09- | FD076 | FD323 |
| HONDA | TRX 500 FAC/FEC/FMC/FPAC 2/4 WD | 500 | 12- | FD076 | MF043 |
| **KAWASAKI 4 Wheels** | | | | | |
| KAWASAKI | KEF 300 LAKOTA | 300 | 95-00 | FD075 | FD076 |
| KAWASAKI | KEF 300 LAKOTA SPORT | 300 | 95-00 | FD075 | FD076 |
| KAWASAKI | KFX 400 | 400 | 03- | FD076 | FD076 |
| KAWASAKI | KFX 450 R RIGHT/DER. | 450 | 07- | FD321 | FD076 |
| **SUZUKI 4 Wheels** | | | | | |
| SUZUKI | LT Z 400 | 400 | 03- | FD076 | FD076 |
| SUZUKI | LT R 450 RIGHT/DER. | 450 | 06- | FD117 | FD076 |
| **YAMAHA 4 Wheels** | | | | | |
| YAMAHA | YFS 200 R BLASTER | 200 | 03- | FD095 | FD076 |
| YAMAHA | YFM 250 R RAPTOR DER/RIGHT | 250 | 08- | FD379 | FD076 |
| YAMAHA | YFM 350 FGW GRIZZLY | 350 | 07- | FD076 | MF |
| YAMAHA | YFM 350 R RAPTOR | 350 | 04- | FD076 | FD076 |
| YAMAHA | YFM 350 WOLVERINE | 350 | 95- | FD095 | FD076 |
| YAMAHA | YFM 400 FGW GRIZZLY | 400 | 07- | FD076 | FD315 |
| YAMAHA | YFM 450 | 450 | 03- | FD086 | FD076 |
| YAMAHA | YFM 450 FW GRIZZLY | 450 | 07- | FD076 | FD315 |
| YAMAHA | YFZ 450 S IZQ. | 450 | 03-05 | FD086 | FD076 |
| YAMAHA | YFM 600 GRIZZLY/HUNTING | 600 | 98-01 | FD076 | MF457 |
| YAMAHA | YFM 600 FWA HUNTER | 600 | 01- | FD076 | MF457 |
| YAMAHA | YFM 660 GRIZZLY | 660 | 02- | FD076 | FD320 |
| YAMAHA | YFM 660 R RAPTOR | 660 | 01- | FD076 | FD076 |

## FD 086

mm 77,4 x 42,3 — A | 7,7 — B

mm 98,8 x 42,3 — A | 7,5 — B

G1054 | G1805 | G1370 | G1396 | G1397

| BRAND MARCA | MODEL MODELO | C.C. | YEAR | FRONT | REAR |
|---|---|---|---|---|---|
| **GAS GAS 4 Wheels** | | | | | |
| GAS GAS | KS 250 RV IZQ. | 250 | 06- | FD086 | |
| **KAWASAKI 4 Wheels** | | | | | |
| KAWASAKI | KLF 400 B1 BAYOU LEFT/IZQ. | 400 | 93-99 | FD086 | |
| KAWASAKI | KFX 750 BRUTE FORCE 4X4 IZQ. | 750 | 04- | FD086 | MF |
| KAWASAKI | KRF 750 (TODOS) IZQ. | 750 | 08- | FD086 | MF |
| KAWASAKI | KVF 750 IZQ. | 750 | 08- | FD086 | MF |
| **KASEA 4 Wheels** | | | | | |
| KASEA | KS 90 | 90 | 03- | MF | FD086 |
| KASEA | KU 90 | 90 | 03- | MF | FD086 |
| KASEA | SKYHAWK 125 | 125 | 03- | MF | FD086 |
| KASEA | KS 150 | 150 | 03- | MF | FD086 |
| KASEA | KU 150 | 150 | 03- | MF | FD086 |
| KASEA | SKYHAWK 170 | 170 | 03- | MF | FD086 |
| KASEA | SKYHAWK 250 | 250 | 03- | MF | FD086 |
| **SUZUKI 4 Wheels** | | | | | |
| SUZUKI | LTF 300 IZQ. | 300 | 02- | FD086 | MF321 |
| SUZUKI | LT R 450 LEFT/IZQ. | 450 | 06- | FD086 | |
| SUZUKI | LT-F/A 500 F QUADRUNNER LEFT/IZQ. | 500 | 98-02 | FD086 | FD318 |
| **YAMAHA 4 Wheels** | | | | | |
| YAMAHA | YFM 450 | 450 | 03- | FD086 | FD076 |
| YAMAHA | YFM 450 WOLVERINE IZQ. | 450 | 06- | FD086 | |
| YAMAHA | YFZ 450 R DER/RIGHT | 450 | 09- | FD086 | FD284 |
| YAMAHA | YFZ 450 S IZQ. | 450 | 03-05 | FD086 | FD076 |
| YAMAHA | YFZ 450 S IZQ. | 450 | 06- | FD086 | FD063 |
| YAMAHA | YFZ 450 R/V IZQ. | 450 | 06- | FD086 | FD284 |
| YAMAHA | YXR 660 RHINO 4X4 DER./RIGHT | 660 | 04- | FD086 | FD318 |
| YAMAHA | YFM 700 R RAPTOR IZQ./LEFT | 700 | 06-12 | FD086 | |
| YAMAHA | YFM 700 R RAPTOR IZQ./LEFT | 700 | 13- | FD086 | |
| YAMAHA | YXR 700 RHINO 4X4 DER./RIGHT | 700 | 08- | FD086 | |

## FD 093

mm 75,0 x 36,0 — A | 10,0 — A[1]

G1054 | G1805 | G1396 |

| BRAND MARCA | MODEL MODELO | C.C. | YEAR | FRONT | REAR |
|---|---|---|---|---|---|
| **GOES 4 Wheels** | | | | | |
| GOES | G 125 XM | 125 | - | FD164 | FD093 |
| GOES | G 250 XM | 125 | - | FD164 | FD093 |

## FD 094

mm 47,4 x 37,0 — A | 10,0 — B

mm 85,0 x 42,1 — A | 7,8 — B

G1054 | G1805 | G1396 |

| BRAND MARCA | MODEL MODELO | C.C. | YEAR | FRONT | REAR |
|---|---|---|---|---|---|
| **ADLY 4 Wheels** | | | | | |
| ADLY | CRUSADER QUAD 150 | 150 | 06- | FD094 | FD094 |
| ADLY | INTERCEPTOR 150 | 150 | 06- | FD094 | FD094 |
| ADLY | CRUSADER QUAD 300 | 300 | 06- | FD094 | FD094 |
| ADLY | INTERCEPTOR 300 | 300 | 06- | FD336 | FD094 |
| **AEON 4 Wheels** | | | | | |
| AEON | REVO R 50 | 50 | 03- | MF | FD094 |
| AEON | REVO R 100 | 100 | 03- | MF | FD094 |
| AEON | COBRA 220 | 220 | 06- | FD094 | FD094 |
| AEON | OVERLAND 3.0 | 300 | 06- | FD094 | FD094 |
| AEON | CROSSLAND RX 350 | 350 | 11- | FD094 | FD117 |
| **BOMBARDIER 4 Wheels** | | | | | |
| BOMBARDIER | RALLY 200 | 200 | 03-04 | FD094 | |
| BOMBARDIER | RALLY 200 | 200 | 05- | FD094 | FD315 |
| **CAN-AM 4 Wheels** | | | | | |
| CAN-AM | DS 90 X | 90 | 08- | FD094 | FD094 |
| **CPI 4 Wheels** | | | | | |
| CPI | QUAD 50 | 50 | 03- | MF | FD094 |
| CPI | QUAD 100 | 100 | 03- | MF | FD094 |
| **DAELIM 4 Wheels** | | | | | |
| DAELIM | ET 250 QUAD | 250 | 06- | FD094 | FD399 |
| DAELIM | ET 300 QUAD | 300 | 07- | FD094 | FD399 |
| **E-TON 4 Wheels** | | | | | |
| E-TON | VIPER 50 MINI / RXL 50 M | 50 | 03- | MF | FD094 |
| E-TON | VIPER 70 / RLX 70 | 70 | 03- | MF | FD094 |



For other models years previous to 1990 visit **www.galferonline.es** · Para otros modelos anteriores al año 1990 visitar **www.galferonline.es**

For consult TÜV (ABE) type approvals visit **www.galfermoto.com --> DOWNLOAD --> TÜV CERTIFICATIONS** · Para consultar las homologaciones TÜV (ABE) visitar **www.galfermoto.com --> DESCARGAS --> CERTIFICACIONES TÜV**

| | | | | |
|---|---|---|---|---|
| VIPER 90 / RLX 90 | 90 | 03- | MF | FD094 |
| VIPER 90 R / RLX 90 R | 90 | 03- | MF | FD094 |
| VIPER ST EXL 150 | 150 | 05- | FD094 | FD117 |
| VECTOR ST 250 / 250 | 250 | 06- | FD094 | FD117 |
| VECTOR ST 300 | 300 | 07- | FD094 | FD399 |
| VORTEX ST 300 | 300 | 07- | FD094 | FD399 |
| **GOES 4 Wheels** | | | | |
| 350 S | 350 | - | FD094 | FD075 |
| **KEEWAY 4 Wheels** | | | | |
| DRAGON 250 | 250 | 08- | FD094 | FD095 |
| **MASAI 4 Wheels** | | | | |
| A 300 QUAD | 300 | 05- | FD094 | FD275 |
| A 450 QUAD | 450 | 05- | FD094 | FD275 |
| **P.G.O. 4 Wheels** | | | | |
| X-RIDER 50 | 50 | 03- | MF | FD094 |
| X-RIDER 90 | 90 | 05- | MF | FD094 |
| X-RIDER 110 | 110 | 05- | MF | FD094 |
| X-RIDER 150 | 150 | 03- | MF | FD094 |
| **ROXON 4 Wheels** | | | | |
| RX 150 | 150 | 04- | MF | FD094 |
| SPORT SPIRIT 150 | 150 | 04- | MF | FD094 |
| **TGB 4 Wheels** | | | | |
| HORNET 50 | 50 | 04- | MF | FD094 |
| HORNET 90 | 90 | 04- | MF | FD094 |
| 101 S | 100 | 06- | FD094 | MF453 |
| QUADBLADE 250 | 250 | 06- | FD075 | FD094 |
| QUADBLADE 325 | 325 | 07- | FD075 | FD094 |

## FD 095

mm: 41,5 x 45,3 | A | A | 7,7

G1054 | G1805 | G1396 | G1397

| BRAND MARCA | MODEL MODELO | C.C. | YEAR | FRONT | REAR |
|---|---|---|---|---|---|
| **CCM 4 Wheels** | | | | | |
| LX 350 4 A | | 350 | 08- | FD095 | FD075 |
| LX 700 4 A | | 700 | 08- | FD095 | FD320 |
| **HYOSUNG 4 Wheels** | | | | | |
| TE 400 | | 400 | 05- | FD095 | FD095 |
| TE 450 | | 450 | 06- | FD095 | FD095 |
| **JINCHENG 4 Wheels** | | | | | |
| JC 125 S RACCOON | | 125 | 05- | FD095 | FD188 |
| **KAWASAKI 4 Wheels** | | | | | |
| KVF 300 | | 300 | 99-03 | FD095 | MF |
| KVF 400 PRAIRIE | | 400 | 97- | FD095 | MF152 |
| **KEEWAY 4 Wheels** | | | | | |
| DRAGON 250 | | 250 | 08- | FD094 | FD095 |
| **KYMCO 4 Wheels** | | | | | |
| MXU 150 | | 150 | 05- | MF | FD095 |
| **SUZUKI 4 Wheels** | | | | | |
| LT 250 F OZARK | | 250 | 02- | FD095 | MF |
| LT Z-250 K4 QUAD SPORT | | 250 | 04- | FD095 | MF |
| LT A-400 | | 400 | 02- | FD095 | MF |
| LTF 400 EGER | | 400 | 02-07 | FD095 | MF |
| LT F 500 VINSON | | 500 | 09- | FD095 | |
| **SYM 4 Wheels** | | | | | |
| QUADRAIDER 600 | | 600 | 06-09 | FD095 | FD336 |
| **YAMAHA 4 Wheels** | | | | | |
| YFS 200 R BLASTER | | 200 | 03- | FD095 | FD076 |
| YFM 250 | | 250 | 01- | FD095 | MF |
| YFM 250 X BEAR TRACKER | | 250 | 01- | FD095 | MF |
| YFM 250 BRUIN | | 250 | 05-06 | FD095 | MF |
| YFM BIG BEAR | | 250 | 07- | FD095 | MF |
| YFM 350 BRUIN87 | | 350 | 04- | FD095 | MF |
| YFM 350 FWB BIG BEAR | | 350 | 99- | FD095 | MF457 |
| YFM 350 WOLVERINE | | 350 | 95- | FD095 | FD076 |
| YFZ 350 A,B,D,E BANSHEE | | 350 | 90-06 | FD095 | FD095 |
| YFM 400 FW BIG BEAR | | 400 | 00- | FD095 | MF457 |
| YFM 400 FWA KODIAK | | 400 | 00- | FD095 | FD318 |
| YFM 400 TODOS MODELOS | | 400 | 00- | FD095 | MF457 |
| YFM 450 GRIZZLY IRS | | 450 | 10- | FD095 | |
| YFM 450 GRIZZLY EPS | | 450 | 11- | FD095 | |
| YFM 450 KODIAK | | 450 | 03- | FD095 | FD315 |

## FD 117

mm: 77,4 x 42,3 | A | B | 7,7

mm: 98,8 x 42,4 | A | B | 7,5

G1054 | G1805 | G1370 | G1397

| BRAND MARCA | MODEL MODELO | C.C. | YEAR | FRONT | REAR |
|---|---|---|---|---|---|
| **AEON 4 Wheels** | | | | | |
| COBRA RS 125 | | 125 | 03- | MF | FD117 |
| OVERLAND 125 | | 125 | 03- | MF | FD117 |
| COBRA RS 180 | | 180 | 03- | MF | FD117 |
| OVERLAND 180 | | 180 | 03- | MF | FD117 |
| ROADSTER 180 | | 180 | 03- | MF | FD117 |
| CROSSLAND RX 350 | | 350 | 11- | FD094 | FD117 |
| **BLANEY 4 Wheels** | | | | | |
| XL 200 TROOPER | | 200 | 03- | MF | FD117 |
| **CPI 4 Wheels** | | | | | |
| XT 50 QUAD | | 50 | 06- | MF | FD117 |
| XS 250 QUAD | | 250 | 06- | FD336 | FD117 |
| **E-TON 4 Wheels** | | | | | |
| CHALLENGE CLX 150 | | 150 | 03- | MF002 | FD117 |
| VIPER 150 / RLX 150 | | 150 | 05- | MF002 | FD117 |
| VIPER ST EXL 150 | | 150 | 05- | FD094 | FD117 |
| YUKON ST ELX 150 | | 150 | 03- | MF002 | FD117 |
| VECTOR ST 250 / 250 | | 250 | 06- | FD094 | FD117 |
| **GAS GAS 4 Wheels** | | | | | |
| KS 250 RV DER. | | 250 | 06- | FD117 | |
| **KAWASAKI 4 Wheels** | | | | | |
| KLF 400 B1 BAYOU RIGHT/DER. | | 400 | 93-99 | FD117 | FD117 |
| KFX 750 BRUTE FORCE 4X4 DER. | | 750 | 04- | FD117 | |
| KRF 750 (TODOS) DER. | | 750 | 08- | FD117 | MF |
| KVF 750 DER. | | 750 | 08- | FD117 | MF |
| **SUZUKI 4 Wheels** | | | | | |
| LTF 300 DER. | | 300 | 02- | FD117 | MF321 |
| LT R 450 RIGHT/DER. | | 450 | 06- | FD117 | FD076 |
| LT-F/A 500 F QUADRUNNER RIGHT/DER. | | 500 | 98-02 | FD117 | |
| **TGB 4 Wheels** | | | | | |
| QUADBLADE 400 | | 400 | 06- | FD075 | FD117 |
| **YAMAHA 4 Wheels** | | | | | |
| YFM 450 WOLVERINE DER. | | 450 | 06- | FD117 | FD315 |
| YFZ 450 R IZQ/LEFT | | 450 | 09- | FD117 | |
| YFZ 450 S DER. | | 450 | 03-05 | FD117 | |
| YFZ 450 S DER. | | 450 | 06- | FD117 | |
| YFZ 450 R/V DER. | | 450 | 06- | FD117 | |
| YXR 660 RHINO 4X4 IZQ./LEFT | | 660 | 04- | FD117 | |
| YFM 700 R RAPTOR DER./RIGHT | | 700 | 06-12 | FD117 | FD318 |
| YFM 700 R RAPTOR DER./RIGHT | | 700 | 13- | FD117 | FD284 |
| YXR 700 RHINO 4X4 IZQ./LEFT | | 700 | 08- | FD117 | |

## FD 133

mm: 76,8 x 41,8 | A | A | 7,4

G1054 | G1805 | G1380

| BRAND MARCA | MODEL MODELO | C.C. | YEAR | FRONT | REAR |
|---|---|---|---|---|---|
| **GOES 4 Wheels** | | | | | |
| GS 50 X | | 50 | 08- | FD133 | FD133 |

## FD 138

mm: 94,0 x 36,7 | A | A1 | 7,6

G1054 | G1805 | G1370 | G1380 | G1396

| BRAND MARCA | MODEL MODELO | C.C. | YEAR | FRONT | REAR |
|---|---|---|---|---|---|
| **GAS GAS 4 Wheels** | | | | | |
| HP WILD 50 | | 50 | 03- | FD138 | FD138 |
| HP WILD 240 | | 240 | 03- | FD138 | FD138 |
| HP WILD 300 | | 300 | 03- | FD138 | FD138 |
| HP WILD 450 | | 450 | 03- | FD138 | FD138 |
| HP WILD 515 | | 515 | 09- | FD138 | FD138 |

## FD 145

mm: 77,4 x 42,3 | A | B | 9,2

mm: 98,8 x 42,3 | A | B | 9,2

G1054 | G1380

| BRAND MARCA | MODEL MODELO | C.C. | YEAR | FRONT | REAR |
|---|---|---|---|---|---|
| **GOES 4 Wheels** | | | | | |
| GS 125 BIG WHEEL | | 125 | 08- | FD073 | FD145 |

## FD 164

mm: 94,2 x 33,7 | A | A1 | 7,5

G1054 | G1805 | G1396

| BRAND MARCA | MODEL MODELO | C.C. | YEAR | FRONT | REAR |
|---|---|---|---|---|---|
| **GOES 4 Wheels** | | | | | |
| G 125 XM | | 125 | - | FD164 | FD093 |
| G 250 XM | | 125 | - | FD164 | FD093 |
| **HONDA 4 Wheels** | | | | | |
| TRX 450 R | | 450 | 04-09 | FD164 | FD323 |
| TRX 700 XX | | 700 | 08- | FD164 | |

## FD 165

mm: 78,0 x 40,8 | A | A1 | 9,0

G1054 | G1805 | G1371 | G1396

| BRAND MARCA | MODEL MODELO | C.C. | YEAR | FRONT | REAR |
|---|---|---|---|---|---|
| **HUSABERG 4 Wheels** | | | | | |
| EF 400 /E | | 400 | 99- | FD165 | FD075 |
| EF 501 /E | | 500 | 99- | FD165 | FD075 |
| EF 600 /E | | 600 | 99- | FD165 | FD075 |

## FD 187

| mm | | | |
|---|---|---|---|
| 77,4 x 42,3 | 9,0 | A | B |
| 98,8 x 42,3 | 9,0 | A | B |

G1054 | G1380

| BRAND MARCA | MODEL MODELO | C.C. | YEAR | FRONT | REAR |
|---|---|---|---|---|---|
| **BAROSSA 4 Wheels** | | | | | |
| PYTHON 50 | | 50 | 04- | MF | FD187 |
| PYTHON 100 | | 100 | 04- | MF | FD187 |
| 150 CHEETAH | | 150 | 03- | MF | FD187 |
| 150 MAGNA | | 150 | 03- | MF | FD187 |
| 170 CHEETAH | | 170 | 03- | MF | FD187 |
| 170 MAGNA | | 170 | 03- | MF | FD187 |
| **DERBI 4 Wheels** | | | | | |
| DXR 200 | | 200 | 04- | MF | FD187 |
| DXR 250 | | 250 | 04- | MF | FD187 |
| **MACBOR 4 Wheels** | | | | | |
| CX 250 / R | | 250 | 05- | MF | FD187 |
| **SACHS 4 Wheels** | | | | | |
| 4 ROCK 250 | | 250 | 04- | MF | FD187 |

## FD 188

| mm | | | |
|---|---|---|---|
| 70,2 x 41,1 | 8,0 | A | B |
| 85,1 x 44,3 | 8,0 | A | B |

G1054 | G1380

| BRAND MARCA | MODEL MODELO | C.C. | YEAR | FRONT | REAR |
|---|---|---|---|---|---|
| **JINCHENG 4 Wheels** | | | | | |
| JC 125 S RACCOON | | 125 | 05- | FD095 | FD188 |

## FD 220

| mm | | | |
|---|---|---|---|
| 50,8 x 53,9 | 8,0 | A | A |

G1054 | G1371 | G1380

| BRAND MARCA | MODEL MODELO | C.C. | YEAR | FRONT | REAR |
|---|---|---|---|---|---|
| **BOMBARDIER 4 Wheels** | | | | | |
| TRAXTER 500 XL / XT | | 500 | 00- | FD220 | FD220 |
| **YAMAHA 4 Wheels** | | | | | |
| YFA 1B 125 BREEZE (KIT YAMAHA FR.) | | 125 | 91- | MF458 | FD220 |

## FD 261

| mm | | | |
|---|---|---|---|
| 64,1 x 36,8 | 10,8 | A | B |
| 85,0 x 44,0 | 8,6 | A | B |

G1054 | G1397

| BRAND MARCA | MODEL MODELO | C.C. | YEAR | FRONT | REAR |
|---|---|---|---|---|---|
| **KYMCO 4 Wheels** | | | | | |
| Mxer 50 | | 50 | 03- | MF002 | FD261 |
| MXU 50 | | 50 | 06- | MF | FD261 |
| MAXXER 90 | | 90 | 05- | MF | FD261 |
| Mxer 150 | | 150 | 03- | MF002 | FD261 |
| MXU 150 | | 150 | 06- | MF | FD261 |

## FD 275

| mm | | | |
|---|---|---|---|
| 44,8 x 50,8 | 6,8 | A | A |

G1054 | G1380 | G1397

| BRAND MARCA | MODEL MODELO | C.C. | YEAR | FRONT | REAR |
|---|---|---|---|---|---|
| **KYMCO 4 Wheels** | | | | | |
| KXR 250 SPORT | | 250 | 04- | FD336 | FD275 |
| MAXXER 250 | | 250 | 06- | FD336 | FD275 |
| MXU 250 | | 250 | 05- | FD336 | FD275 |
| URBAN QUAD 250 | | 250 | 06- | FD336 | FD275 |
| MAXXER 300 | | 300 | 06- | FD336 | FD275 |
| MXU 300 | | 300 | 05- | FD336 | FD275 |
| **MASAI 4 Wheels** | | | | | |
| A 300 QUAD | | 300 | 05- | FD094 | FD275 |
| A 450 QUAD | | 450 | 05- | FD094 | FD275 |

## FD 284

| mm | | | |
|---|---|---|---|
| 81,8 x 42,3 | 9,3 | A | A |

G1054 | G1380

| BRAND MARCA | MODEL MODELO | C.C. | YEAR | FRONT | REAR |
|---|---|---|---|---|---|
| **YAMAHA 4 Wheels** | | | | | |
| YFZ 450 R DER/RIGHT | | 450 | 09- | FD086 | FD284 |
| YFZ 450 R/V IZQ. | | 450 | 06- | FD086 | FD284 |
| YFM 700 R RAPTOR DER./RIGHT | | 700 | 13- | FD117 | FD284 |

## FD 300

| mm | | | |
|---|---|---|---|
| 73,4 x 43,4 | 7,0 | A | A |

G1054 | G1397

| BRAND MARCA | MODEL MODELO | C.C. | YEAR | FRONT | REAR |
|---|---|---|---|---|---|
| **FACTORY 4 Wheels** | | | | | |
| MINI HELIX | | 50 | 02- | MF | FD300 |
| **POLARIS 4 Wheels** | | | | | |
| XPRESS 300 | | 300 | 96-00 | FD303 | FD300 |
| SPORTSMAN 350 | | 350 | 93- | FD303 | FD300 |
| SPORT 400 | | 400 | 94-98 | FD303 | FD300 |
| SPORTSMAN 400 | | 400 | 94-97 | FD303 | FD300 |
| MAGNUM 425 All Models 2X4 | | 425 | 95-97 | FD303 | FD300 |
| MAGNUM 425 All Models 4X4 | | 425 | 95-97 | FD303 | FD300 |
| SPORTSMAN 500 | | 500 | 96-97 | FD303 | FD300 |
| SCRAMBLER All Models | | | 95-97 | FD303 | FD300 |
| TRAIL BLAZER All Models | | | 90-98 | FD303 | FD300 |
| XPLORER All Models | | | 95-99 | FD303 | FD300 |

## FD 301

| mm | | | |
|---|---|---|---|
| 72,8 x 52,4 | 7,0 | A | A |

G1054 | G1397

| BRAND MARCA | MODEL MODELO | C.C. | YEAR | FRONT | REAR |
|---|---|---|---|---|---|
| **LINHAI 4 Wheels** | | | | | |
| GOON 260 | | 260 | 07- | | FD301 |
| **POLARIS 4 Wheels** | | | | | |
| XPEDITION 325 | | 325 | 00- | FD303 | FD301 |
| MAGNUM 325 All Models | | 325 | 00-01 | FD303 | FD301 |
| SPORTSMAN 335 | | 335 | 99-00 | FD303 | FD301 |
| SPORT 400 | | 400 | 99- | FD303 | FD301 |
| SPORTSMAN 400 | | 400 | 00-02 | FD303 | FD301 |
| XPEDITION 425 | | 425 | 00- | FD303 | FD301 |
| MAGNUM 500 All Models | | 500 | 99-01 | FD303 | FD301 |
| SPORTSMAN 500 | | 500 | 98-02 | FD303 | FD301 |
| SCRAMBLER All Models | | | 98-06 | FD303 | FD301 |
| TRAIL BLAZER All Models | | | 99- | FD303 | FD301 |
| TRAIL BOSS All Models | | | 00- | FD303 | FD301 |
| XPLORER All Models | | | 00- | FD303 | FD301 |

## FD 302

| mm | | | |
|---|---|---|---|
| 67,3 x 44,6 | 7,8 | A | A |

G1396 | G1397

| BRAND MARCA | MODEL MODELO | C.C. | YEAR | FRONT | REAR |
|---|---|---|---|---|---|
| **ARCTIC CAT 4 Wheels** | | | | | |
| 250 2X4/4X4 TODOS | | 250 | 98-04 | FD302 | FD302 |
| 300 2X4/4X4 TODOS | | 300 | 98-04 | FD302 | FD302 |
| 375 2X4/4X4 TODOS | | 375 | 98-04 | FD302 | FD302 |
| 400 2X4/4X4 TODOS | | 400 | 98-04 | FD302 | FD302 |
| 454 2X4/4X4 TODOS | | 454 | 98-04 | FD302 | FD353 |
| 500 2X4/4X4 TODOS | | 500 | 98-04 | FD302 | FD302 |
| **LAVERDA 4 Wheels** | | | | | |
| QUASAR 125 HP | | 125 | 04- | MF | FD302 |
| QUASAR 180 HP | | 180 | 04- | MF | FD302 |
| QUASAR 400 4X4 | | 400 | 04- | FD302 | FD302 |
| QUASAR 500 4X4 | | 500 | 04- | FD302 | FD302 |

## FD 303

| mm | | | |
|---|---|---|---|
| 96,8 x 38,9 | 7,0 | A | A |

G1054 | G1397

| BRAND MARCA | MODEL MODELO | C.C. | YEAR | FRONT | REAR |
|---|---|---|---|---|---|
| **MACBOR 4 Wheels** | | | | | |
| ZX 250 | | 250 | 06- | FD303 | FD303 |
| **POLARIS 4 Wheels** | | | | | |
| HAWKEYE 300 2X4/4X4 | | 300 | 07- | FD303 | FD303 |
| XPRESS 300 | | 300 | 96-00 | FD303 | FD300 |
| XPEDITION 325 | | 325 | 00- | FD303 | FD301 |
| MAGNUM 325 All Models | | 325 | 00-01 | FD303 | FD301 |
| MAGNUM 325 All Models | | 325 | 02- | FD303 | FD317 |
| MAGNUM 330 All Models | | 330 | 03- | FD303 | FD317 |
| SPORTSMAN 335 | | 335 | 99-00 | FD303 | FD301 |
| SPORTSMAN 350 | | 350 | 93- | FD303 | FD300 |
| SPORT 400 | | 400 | 94-98 | FD303 | FD300 |
| SPORT 400 | | 400 | 99- | FD303 | FD301 |
| SPORTSMAN 400 | | 400 | 00-02 | FD303 | FD301 |
| SPORTSMAN 400 | | 400 | 03- | FD303 | FD317 |
| SPORTSMAN 400 | | 400 | 94-97 | FD303 | FD300 |
| SPORTSMAN 400 HO 4X4 | | 400 | 08-10 | FD303 | FD303 |
| SPORTSMAN 400 HO 4X4 | | 400 | 11- | FD303 | |
| MAGNUM 425 All Models 2X4 | | 425 | 95-97 | FD303 | FD300 |
| MAGNUM 425 All Models 4X4 | | 425 | 95-97 | FD303 | FD300 |
| XPEDITION 425 | | 425 | 00- | FD303 | FD301 |
| OUTLAW 450 S | | 450 | 08- | FD404 | FD303 |
| SPORTSMAN 450 | | 450 | 06-06 | FD303 | FD317 |
| SPORTSMAN 450 | | 450 | 07- | FD303 | FD317 |
| MAGNUM 500 All Models | | 500 | 99-01 | FD303 | FD301 |
| MAGNUM 500 All Models | | 500 | 02- | FD303 | FD317 |
| PREDATOR 500 | | 500 | 03- | FD303 | FD303 |
| SCRAMBLER 500 2X4 | | 500 | 07- | FD303 | FD317 |
| SCRAMBLER 500 4X4 | | 500 | 07- | FD303 | FD317 |
| SPORTSMAN 500 | | 500 | 96-97 | FD303 | FD300 |
| SPORTSMAN 500 | | 500 | 98-02 | FD303 | FD301 |
| SPORTSMAN 500 | | 500 | 03- | FD303 | FD317 |
| SPORTSMAN 500 FOREST | | 500 | 12- | FD303 | FD317 |
| SPORTSMAN 500 TOUNING HO | | 500 | 08-10 | FD303 | FD303 |
| SPORTSMAN 500 TOUNING HO | | 500 | 11- | FD303 | |



For other models years previous to 1990 visit **www.galferonline.es** · Para otros modelos anteriores al año 1990 visitar **www.galferonline.es**

For consult TÜV (ABE) type approvals visit **www.galfermoto.com --> DOWNALOAD --> TÜV CERTIFICATIONS** · Para consultar las homologaciones TÜV (ABE) visitar **www.galfermoto.com --> DESCARGAS --> CERTIFICACIONES TÜV**

| | | | | |
|---|---|---|---|---|
| OUTLAW 525 S | 525 | 08- | FD404 | FD303 |
| OUTLAW 525 IRS | 525 | 08- | FD404 | FD303 |
| SPORTSMAN 700 | 700 | 02- | FD303 | FD317 |
| RANGER 800 RZR | 800 | 08- | FD404 | FD303 |
| SPORTSMAN 800 efi | 800 | 07- | FD303 | FD317 |
| SPORTSMAN 800 X2 efi | 800 | 07- | FD303 | FD303 |
| SCRAMBLER All Models | | 95-97 | FD303 | FD300 |
| SCRAMBLER All Models | | 98-06 | FD303 | FD301 |
| TRAIL BLAZER All Models | | 90-98 | FD303 | FD300 |
| TRAIL BLAZER All Models | | 99- | FD303 | FD301 |
| TRAIL BOSS All Models | | 00- | FD303 | FD301 |
| XPLORER All Models | | 95-99 | FD303 | FD300 |
| XPLORER All Models | | 00- | FD303 | FD301 |

## FD 315

mm 62,0 x 40,6 — 9,5 — A B
mm 82,0 x 40,7 — 9,5 — A B

G1054 | G1397

| BRAND MARCA | MODEL MODELO | C.C. | YEAR | FRONT | REAR |
|---|---|---|---|---|---|
| **BOMBARDIER 4 Wheels** | | | | | |
| RALLY 200 | | 200 | 05- | FD094 | FD315 |
| OUTLANDER 330 DER. | | 330 | 04- | FD315 | |
| OUTLANDER 330 IZQ. | | 330 | 04- | FD318 | FD315 |
| OUTLANDER 400 DER. | | 400 | 03- | FD315 | |
| OUTLANDER 400 IZQ. | | 400 | 03- | FD318 | FD315 |
| OUTLANDER 400 DER. MAX | | 400 | 03- | FD315 | |
| OUTLANDER 400 IZQ. MAX | | 400 | 03- | FD318 | FD315 |
| QUEST 500/600 IZQ. | | 650 | 02- | FD315 | FD315 |
| DS 650 / BAJA IZQ. | | 650 | 00- | FD315 | FD315 |
| TRAXTER MAX 650 IZQ. | | 650 | 04- | FD315 | FD318 |
| OUTLANDER 800 IZQ. | | 800 | 06- | FD315 | FD315 |
| **CAN-AM 4 Wheels** | | | | | |
| RALLY 200 | | 200 | 07- | FD073 | FD315 |
| OUTLANDER 400 STD/XT IZQ./LEFT | | 400 | 07- | FD315 | |
| OUTLANDER 400 STD/XT DER./RIGHT | | 400 | 07- | FD318 | FD315 |
| OUTLANDER 400 MAX STD/XT IZQ./LEFT | | 400 | 07- | FD315 | |
| OUTLANDER 400 MAX STD/XT DER./RIGHT | | 400 | 07- | FD318 | FD315 |
| OUTLANDER 500 STD/XT IZQ./LEFT | | 500 | 07- | FD315 | |
| OUTLANDER 500 STD/XT DER./RIGHT | | 500 | 07- | FD318 | FD315 |
| OUTLANDER 500 MAX STD/XT IZQ./LEFT | | 500 | 07- | FD315 | |
| OUTLANDER 500 MAX STD/XT DER./RIGHT | | 500 | 07- | FD318 | FD315 |
| DS 650 X IZQ./LEFT | | 650 | 07- | FD315 | |
| DS 650 X DER./RIGHT | | 650 | 07- | FD318 | FD315 |
| OUTLANDER 650 STD/XT IZQ./LEFT | | 650 | 07- | FD315 | |
| OUTLANDER 650 STD/XT DER./RIGHT | | 650 | 07- | FD318 | FD315 |
| OUTLANDER 650 MAX STD/XT IZQ./LEFT | | 650 | 07- | FD315 | |
| OUTLANDER 650 MAX STD/XT DER./RIGHT | | 650 | 07- | FD318 | FD315 |
| OUTLANDER 800 STD/XT IZQ./LEFT | | 800 | 07- | FD315 | |
| OUTLANDER 800 STD/XT DER./RIGHT | | 800 | 07- | FD318 | FD315 |
| OUTLANDER 800 MAX STD/XT IZQ./LEFT | | 800 | 07- | FD315 | |
| OUTLANDER 800 MAX STD/XT DER./RIGHT | | 800 | 07- | FD318 | FD315 |
| RENEGADE 800 HO efi IZQ./LEFT | | 800 | 07- | FD315 | |
| RENEGADE 800 HO efi DER./RIGHT | | 800 | 07- | FD318 | FD315 |
| **CANNONDALE 4 Wheels** | | | | | |
| FX 400 IZQ. | | 400 | 01- | FD315 | FD315 |
| CANNIBAL 440 IZQ. | | 440 | 02- | FD315 | FD315 |
| BLAZE 440 IZQ. | | 440 | 02- | FD315 | FD315 |
| GLAMIS 440 IZQ. | | 440 | 03- | FD315 | FD315 |
| MOTO 440 IZQ. | | 440 | 02- | FD315 | FD315 |
| SPEED 440 IZQ. | | 440 | 02- | FD315 | FD315 |
| **SUZUKI 4 Wheels** | | | | | |
| LT A 400 DER. KING QUAD | | 400 | 08- | FD315 | MF |
| LT F 400 DER. KING QUAD | | 400 | 08- | FD315 | MF |
| LT-A 700 KING QUAD LEFT/IZQ. | | 700 | 05- | FD315 | |
| **YAMAHA 4 Wheels** | | | | | |
| YFM 400 FGW GRIZZLY | | 400 | 07- | FD076 | FD315 |
| YFM 450 FW GRIZZLY | | 450 | 07- | FD076 | FD315 |
| YFM 450 KODIAK | | 450 | 03- | FD095 | FD315 |
| YFM 450 WOLVERINE DER. | | 450 | 06- | FD117 | FD315 |

## FD 317

mm 90,3 x 41,2 — 8,2 — A A

G1397

| BRAND MARCA | MODEL MODELO | C.C. | YEAR | FRONT | REAR |
|---|---|---|---|---|---|
| **POLARIS 4 Wheels** | | | | | |
| MAGNUM 325 All Models | | 325 | 02- | FD303 | FD317 |
| MAGNUM 330 All Models | | 330 | 03- | FD303 | FD317 |
| SPORTSMAN 400 | | 400 | 03- | FD303 | FD317 |
| SPORTSMAN 450 | | 450 | 06-06 | FD303 | FD317 |
| SPORTSMAN 450 | | 450 | 07- | FD303 | FD317 |
| MAGNUM 500 All Models | | 500 | 02- | FD303 | FD317 |
| SCRAMBLER 500 2X4 | | 500 | 07- | FD303 | FD317 |
| SCRAMBLER 500 4X4 | | 500 | 07- | FD303 | FD317 |
| SPORTSMAN 500 | | 500 | 03- | FD303 | FD317 |
| SPORTSMAN 500 FOREST | | 500 | 12- | FD303 | FD317 |
| SPORTSMAN 700 | | 700 | 02- | FD303 | FD317 |
| SPORTSMAN 800 efi | | 800 | 07- | FD303 | FD317 |

## FD 318

mm 62,0 x 40,6 — 9,5 — A B
mm 82,0 x 40,7 — 9,5 — A B

G1054 | G1397

| BRAND MARCA | MODEL MODELO | C.C. | YEAR | FRONT | REAR |
|---|---|---|---|---|---|
| **BOMBARDIER 4 Wheels** | | | | | |
| OUTLANDER 330 IZQ. | | 330 | 04- | FD318 | FD315 |
| OUTLANDER 400 IZQ. | | 400 | 03- | FD318 | FD315 |
| OUTLANDER 400 IZQ. MAX | | 400 | 03- | FD318 | FD315 |
| QUEST 500/600 DER. | | 650 | 02- | FD318 | |
| DS 650 / BAJA DER. | | 650 | 00- | FD318 | |
| TRAXTER MAX 650 DER. | | 650 | 04- | FD318 | |
| TRAXTER MAX 650 IZQ. | | 650 | 04- | FD315 | FD318 |
| OUTLANDER 800 DER. | | 800 | 06- | FD318 | |
| **CAN-AM 4 Wheels** | | | | | |
| OUTLANDER 400 STD/XT DER./RIGHT | | 400 | 07- | FD318 | FD315 |
| OUTLANDER 400 MAX STD/XT DER./RIGHT | | 400 | 07- | FD318 | FD315 |
| OUTLANDER 500 STD/XT DER./RIGHT | | 500 | 07- | FD318 | FD315 |
| OUTLANDER 500 MAX STD/XT DER./RIGHT | | 500 | 07- | FD318 | FD315 |
| DS 650 X DER./RIGHT | | 650 | 07- | FD318 | FD315 |
| OUTLANDER 650 STD/XT DER./RIGHT | | 650 | 07- | FD318 | FD315 |
| OUTLANDER 650 MAX STD/XT DER./RIGHT | | 650 | 07- | FD318 | FD315 |
| OUTLANDER 800 STD/XT DER./RIGHT | | 800 | 07- | FD318 | FD315 |
| OUTLANDER 800 MAX STD/XT DER./RIGHT | | 800 | 07- | FD318 | FD315 |
| RENEGADE 800 HO efi DER./RIGHT | | 800 | 07- | FD318 | FD315 |
| **CANNONDALE 4 Wheels** | | | | | |
| FX 400 DER. | | 400 | 01- | FD318 | |
| CANNIBAL 440 DER. | | 440 | 02- | FD318 | |
| BLAZE 440 DER. | | 440 | 02- | FD318 | |
| GLAMIS 440 DER. | | 440 | 03- | FD318 | |
| MOTO 440 DER. | | 440 | 02- | FD318 | |
| SPEED 440 DER. | | 440 | 02- | FD318 | |
| **SUZUKI 4 Wheels** | | | | | |
| LT A 400 IZQ. KING QUAD | | 400 | 08- | FD318 | MF |
| LT F 400 IZQ. KING QUAD | | 400 | 08- | FD318 | MF |
| LT-F/A 500 F QUADRUNNER LEFT/IZQ. | | 500 | 98-02 | FD086 | FD318 |
| LT-A 700 KING QUAD RIGHT/DER. | | 700 | 05- | FD318 | MF |
| **YAMAHA 4 Wheels** | | | | | |
| YFM 400 FWA KODIAK | | 400 | 00- | FD095 | FD318 |
| YXR 660 RHINO 4X4 DER./RIGHT | | 660 | 04- | FD086 | FD318 |
| YFM 700 R RAPTOR DER./RIGHT | | 700 | 06-12 | FD117 | FD318 |

## FD 319

mm 94,7 x 35,6 — 7,5 — A B
mm 119,5 x 26,4 — 7,1 — A B

G1397

| BRAND MARCA | MODEL MODELO | C.C. | YEAR | FRONT | REAR |
|---|---|---|---|---|---|
| **KAWASAKI 4 Wheels** | | | | | |
| KFX 450 R LEFT/IZQ. | | 450 | 07- | FD319 | |
| KVF 650 PRAIRIE DER. | | 650 | 02- | FD319 | |
| KVF 650 BRUTE FORCE 4X4 DER. | | 650 | 05- | FD319 | MF |
| KFX 700 DER. | | 700 | 03- | FD319 | MF |
| KFX 700 TEAM GREEN DER. | | 700 | 05- | FD319 | MF |
| KSV 700 IZQ | | 700 | 04-11 | FD319 | MF |
| KVF 700 IZQ D1 | | 700 | 05- | FD319 | MF |
| **SUZUKI 4 Wheels** | | | | | |
| LT A 450 LEFT/IZQ. | | 450 | 07- | FD319 | |
| LT-V 700 TWIN PEAKS LEFT/IZQ. | | 700 | 04- | FD319 | |

## FD 320

mm 65,5 x 44,8 — 11,7 — A A

G1054

| BRAND MARCA | MODEL MODELO | C.C. | YEAR | FRONT | REAR |
|---|---|---|---|---|---|
| **CCM 4 Wheels** | | | | | |
| LX 700 4 A | | 700 | 08- | FD095 | FD320 |
| **GOES 4 Wheels** | | | | | |
| 360 MAX | | 360 | - | | FD320 |
| 520 2X4/4X4 | | 520 | - | | FD320 |
| 520 MAX | | 520 | - | | FD320 |
| 720 MAX | | 720 | - | | FD320 |
| **YAMAHA 4 Wheels** | | | | | |
| YFM 660 GRIZZLY | | 660 | 02- | FD076 | FD320 |

## FD 321

mm 94,7 x 35,6 — 7,5 — A B
mm 119,5 x 26,4 — 7,1 — A B

G1397

| BRAND MARCA | MODEL MODELO | C.C. | YEAR | FRONT | REAR |
|---|---|---|---|---|---|
| **KAWASAKI 4 Wheels** | | | | | |
| KFX 450 R RIGHT/DER. | | 450 | 07- | FD321 | FD076 |
| KVF 650 PRAIRIE IZQ. | | 650 | 02- | FD321 | MF |
| KVF 650 BRUTE FORCE 4X4 IZQ. | | 650 | 05- | FD321 | MF |
| KFX 700 IZQ. | | 700 | 03- | FD321 | MF |
| KFX 700 TEAM GREEN IZQ. | | 700 | 05- | FD321 | MF |
| KSV 700 DER | | 700 | 04-11 | FD321 | MF |
| KVF 700 DER D1 | | 700 | 05- | FD321 | MF |
| **SUZUKI 4 Wheels** | | | | | |
| LT A 450 RIGHT/DER. | | 450 | 07- | FD321 | |
| LT-V 700 TWIN PEAKS RIGHT/DER. | | 700 | 04- | FD321 | MF |

## FD 323

mm 75,0 x 39,5 | 11,7 | A | A

G1054 | G1397 |

| BRAND MARCA | MODEL MODELO | C.C. | YEAR | FRONT | REAR |
|---|---|---|---|---|---|
| **HONDA 4 Wheels** | | | | | |
| HONDA | TRX 420 FOURTRAX RANCHER AT | 420 | 09- | FD076 | FD323 |
| HONDA | TRX 450 R | 450 | 04-09 | FD164 | FD323 |
| HONDA | TRX 650 RINCON | 650 | 03-05 | MF | FD323 |
| HONDA | TRX 680 RINCON | 680 | 06- | MF | FD323 |

## FD 336

mm 73,0 x 47,0 | 10,8 | A | B

mm 94,1 x 47,0 | 8,6 | A | B

G1054 | G1397 |

| BRAND MARCA | MODEL MODELO | C.C. | YEAR | FRONT | REAR |
|---|---|---|---|---|---|
| **ADLY 4 Wheels** | | | | | |
| ADLY | ATV 280 S | 280 | 08- | FD336 | |
| ADLY | ATV 280 U | 280 | 08- | FD336 | |
| ADLY | INTERCEPTOR 300 | 300 | 06- | FD336 | FD094 |
| ADLY | 320 4 VALVE 4X4 | 320 | 08- | FD336 | |
| ADLY | ATV 320 S | 320 | 08- | FD336 | |
| ADLY | ATV 320 U | 320 | 08- | FD336 | |
| ADLY | ATV 500 S | 500 | 08- | FD336 | |
| **CAN-AM 4 Wheels** | | | | | |
| CAN-AM | DS 250 | 250 | 07- | FD336 | FD336 |
| **CPI 4 Wheels** | | | | | |
| CPI | XS 250 QUAD | 250 | 06- | FD336 | FD117 |
| **KAWASAKI 4 Wheels** | | | | | |
| KAWASAKI | KVF 300 | 300 | 13- | FD336 | FD336 |
| **KYMCO 4 Wheels** | | | | | |
| KYMCO | KXR 250 SPORT | 250 | 04- | FD336 | FD275 |
| KYMCO | MAXXER 250 | 250 | 06- | FD336 | FD275 |
| KYMCO | MXU 250 | 250 | 05- | FD336 | FD275 |
| KYMCO | URBAN QUAD 250 | 250 | 06- | FD336 | FD275 |
| KYMCO | MAXXER 300 | 300 | 06- | FD336 | FD275 |
| KYMCO | MXU 300 | 300 | 05- | FD336 | FD275 |
| KYMCO | MXU 300 R | 300 | 10- | FD336 | FD336 |
| KYMCO | MXU 500 | 500 | 06- | FD336 | FD336 |
| KYMCO | MXU 500 IRS | 500 | 09- | FD336 | FD353 |
| **SYM 4 Wheels** | | | | | |
| SYM | TRACKRUNNER 200 | 200 | 05- | FD336 | FD399 |
| SYM | QUADLANDER 250 | 250 | 05- | FD336 | FD336 |
| SYM | CITYMAX 300 | 300 | 06- | FD336 | FD399 |
| SYM | QUADRAIDER 600 | 600 | 06-09 | FD095 | FD336 |
| SYM | QUADRAIDER 600 LE | 600 | 10- | FD336 | FD336 |
| **TGB 4 Wheels** | | | | | |
| TGB | AVENGER 400 | 400 | 07- | FD336 | FD336 |
| TGB | OUTBACK 425 | 425 | 07- | FD336 | FD336 |
| TGB | QUADBLADE 425 | 425 | 07- | FD336 | FD336 |

## FD 353

mm 94,5 x 45,5 | 7,0 | A | A

G1054 | G1397 |

| BRAND MARCA | MODEL MODELO | C.C. | YEAR | FRONT | REAR |
|---|---|---|---|---|---|
| **ARCTIC CAT 4 Wheels** | | | | | |
| ARCTIC CAT | 250 2X4/4X4 TODOS | 250 | 05- | FD353 | FD353 |
| ARCTIC CAT | 300 2X4 | 300 | 10- | FD353 | FD353 |
| ARCTIC CAT | 300 4X4 | 300 | 05- | FD353 | FD353 |
| ARCTIC CAT | 400 FI 5 4X4 | 400 | 05- | FD353 | FD353 |
| ARCTIC CAT | 450 Hi | 450 | 10- | FD353 | FD353 |
| ARCTIC CAT | 454 2X4/4X4 TODOS | 454 | 98-04 | FD302 | FD353 |
| ARCTIC CAT | 500 FI 5 | 500 | 05- | FD353 | FD353 |
| ARCTIC CAT | 500 TRV | 500 | 05- | FD353 | FD353 |
| ARCTIC CAT | 650 4X4 | 650 | 05- | FD353 | FD353 |
| ARCTIC CAT | 650 H1 4X4 | 650 | 05- | FD353 | FD353 |
| ARCTIC CAT | 650 PROWLER XT | 650 | 05- | FD353 | FD353 |
| ARCTIC CAT | 650 TRV | 650 | 09- | FD353 | FD353 |
| ARCTIC CAT | 700 DIESEL TRV | 700 | 06- | FD353 | FD353 |
| ARCTIC CAT | 700 H1 TRV | 700 | 09- | FD353 | FD353 |
| ARCTIC CAT | 700 SUPER DUTY DIESEL | 700 | 10- | FD353 | FD353 |
| ARCTIC CAT | 1000 THUNDERCAT | 1000 | 08- | FD353 | FD353 |
| ARCTIC CAT | 1000 H2 TRV | 1000 | 09- | FD353 | FD353 |
| ARCTIC CAT | 1000 WILDCAT 1000i H.D. | 1000 | 12- | FD353 | FD353 |
| **KYMCO 4 Wheels** | | | | | |
| KYMCO | MAXXER 400 | 400 | 09- | FD353 | FD353 |
| KYMCO | MXU 400 | 400 | 08- | FD353 | FD353 |
| KYMCO | MAXXER 450 | 450 | 10- | FD353 | FD353 |
| KYMCO | MXU 450 i IRS | 450 | 11-12 | FD353 | FD353 |
| KYMCO | MXU 450 i | 450 | 13- | FD353 | FD353 |
| KYMCO | MXU 500 IRS | 500 | 09- | FD336 | FD353 |
| **POLARIS 4 Wheels** | | | | | |
| POLARIS | HAWKEYE 300 2X4/4X4 | 300 | 06-06 | FD353 | FD353 |

## FD 370

mm 81,9 x 38,5 | 10,0 | A | A

G1397 |

| BRAND MARCA | MODEL MODELO | C.C. | YEAR | FRONT | REAR |
|---|---|---|---|---|---|
| **HONDA 4 Wheels** | | | | | |
| HONDA | TRX 500 TM/FM/FA/FGA/R | 500 | 05-11 | FD370 | MF043 |

## FD 378

mm 91,7 x 38,2 | 8,0 | A | B

mm 107,0 x 33,8 | 8,0 | A | B

G1397 |

| BRAND MARCA | MODEL MODELO | C.C. | YEAR | FRONT | REAR |
|---|---|---|---|---|---|
| **YAMAHA 4 Wheels** | | | | | |
| YAMAHA | YFM 250 R RAPTOR IZQ/LEFT | 250 | 08- | FD378 | |
| YAMAHA | YFM 550 GRIZZLY IZQ./LEFT | 550 | 09- | FD378 | FD380 |
| YAMAHA | YFM 700 GRIZZLY IZQ./LEFT | 700 | 07- | FD378 | FD380 |

## FD 379

mm 91,7 x 38,2 | 8,0 | A | B

mm 107,0 x 33,8 | 8,0 | A | B

G1397 |

| BRAND MARCA | MODEL MODELO | C.C. | YEAR | FRONT | REAR |
|---|---|---|---|---|---|
| **YAMAHA 4 Wheels** | | | | | |
| YAMAHA | YFM 250 R RAPTOR DER/RIGHT | 250 | 08- | FD379 | FD076 |
| YAMAHA | YFM 550 GRIZZLY DER./RIGHT | 550 | 09- | FD379 | FD381 |
| YAMAHA | YFM 700 GRIZZLY DER./RIGHT | 700 | 07- | FD379 | FD381 |

## FD 380

mm 91,7 x 38,2 | 9,0 | A | B

mm 107,0 x 33,8 | 9,0 | A | B

G1397 |

| BRAND MARCA | MODEL MODELO | C.C. | YEAR | FRONT | REAR |
|---|---|---|---|---|---|
| **YAMAHA 4 Wheels** | | | | | |
| YAMAHA | YFM 550 GRIZZLY IZQ./LEFT | 550 | 09- | FD378 | FD380 |
| YAMAHA | YFM 700 GRIZZLY IZQ./LEFT | 700 | 07- | FD378 | FD380 |

## FD 381

mm 91,7 x 38,2 | 9,0 | A | B

mm 107,0 x 33,8 | 9,0 | A | B

G1397 |

| BRAND MARCA | MODEL MODELO | C.C. | YEAR | FRONT | REAR |
|---|---|---|---|---|---|
| **YAMAHA 4 Wheels** | | | | | |
| YAMAHA | YFM 550 GRIZZLY DER./RIGHT | 550 | 09- | FD379 | FD381 |
| YAMAHA | YFM 700 GRIZZLY DER./RIGHT | 700 | 07- | FD379 | FD381 |

## FD 399

mm 94,0 x 36,1 | 10,1 | A | A

G1054 | G1380 |

| BRAND MARCA | MODEL MODELO | C.C. | YEAR | FRONT | REAR |
|---|---|---|---|---|---|
| **DAELIM 4 Wheels** | | | | | |
| DAELIM | ET 250 QUAD | 250 | 06- | FD094 | FD399 |
| DAELIM | ET 300 QUAD | 300 | 07- | FD094 | FD399 |
| **E-TON 4 Wheels** | | | | | |
| E-TON | VECTOR ST 300 | 300 | 07- | FD094 | FD399 |
| E-TON | VORTEX ST 300 | 300 | 07- | FD094 | FD399 |
| **SYM 4 Wheels** | | | | | |
| SYM | TRACKRUNNER 200 | 200 | 05- | FD336 | FD399 |
| SYM | CITYMAX 300 | 300 | 06- | FD336 | FD399 |

## FD 404

mm 97,1 x 46,8 | 7,6 | A | A

G1397 |

| BRAND MARCA | MODEL MODELO | C.C. | YEAR | FRONT | REAR |
|---|---|---|---|---|---|
| **POLARIS 4 Wheels** | | | | | |
| POLARIS | OUTLAW 450 S | 450 | 08- | FD404 | FD303 |
| POLARIS | OUTLAW 525 S | 525 | 08- | FD404 | FD303 |
| POLARIS | OUTLAW 525 IRS | 525 | 08- | FD404 | FD303 |
| POLARIS | RANGER 800 RZR | 800 | 08- | FD404 | FD303 |



For other models years previous to 1990 visit **www.galferonline.es** · Para otros modelos anteriores al año 1990 visitar **www.galferonline.es**
For consult TÜV (ABE) type approvals visit **www.galfermoto.com --> DOWNLOAD --> TÜV CERTIFICATIONS** · Para consultar las homologaciones TÜV (ABE) visitar **www.galfermoto.com --> DESCARGAS --> CERTIFICACIONES TÜV**

## FD 407

mm: 76,5 x 38,2 | 7,5 | A | A[1]

G1397

| BRAND MARCA | MODEL MODELO | C.C. | YEAR | FRONT | REAR |
|---|---|---|---|---|---|
| **KTM 4 Wheels** | | | | | |
| | 450 SX | 450 | 08- | FD407 | FD408 |
| | 450 XC | 450 | 08- | FD407 | FD408 |
| | 505 SX | 505 | 08- | FD407 | FD408 |
| | 525 XC | 525 | 08- | FD407 | FD408 |

## FD 408

mm: 58,7 x 35,4 | 8,4 | A | A

G1397

| BRAND MARCA | MODEL MODELO | C.C. | YEAR | FRONT | REAR |
|---|---|---|---|---|---|
| **KTM 4 Wheels** | | | | | |
| | 450 SX | 450 | 08- | FD407 | FD408 |
| | 450 XC | 450 | 08- | FD407 | FD408 |
| | 505 SX | 505 | 08- | FD407 | FD408 |
| | 525 XC | 525 | 08- | FD407 | FD408 |

## DF 013 W

øext. 220 mm øint. 105 — 5,0 — OE

| BRAND MARCA | MODEL MODELO | C.C. | YEAR | FRONT | REAR |
|---|---|---|---|---|---|
| **HONDA 4 Wheels** | | | | | |
| TRX 400 EX | | 400 | 99-08 | DF712 | DF013 |
| TRX 400 X9 | | 400 | 09-08 | DF712 | DF013 |

## DF 048 W

øext. 220 mm øint. 105 — 4,2 — OE

| BRAND MARCA | MODEL MODELO | C.C. | YEAR | FRONT | REAR |
|---|---|---|---|---|---|
| **KAWASAKI 4 Wheels** | | | | | |
| KFX 400 | | 400 | 03- | DF894 | DF048 |
| **SUZUKI 4 Wheels** | | | | | |
| LT Z 400 | | 400 | 03- | DF894 | DF048 |

## DF 476 W

øext. 220 mm øint. 58,3 — 4,0 — OE

| BRAND MARCA | MODEL MODELO | C.C. | YEAR | FRONT | REAR |
|---|---|---|---|---|---|
| **YAMAHA 4 Wheels** | | | | | |
| YFS 200 R BLASTER | | 200 | 03- | DF477 | DF476 |
| YFM 350 WOLVERINE | | 350 | 95- | | DF476 |
| YFZ 350 A,B,D,E BANSHEE | | 350 | 90-06 | DF477 | DF476 |
| YFM 660 R RAPTOR | | 660 | 01- | DF477 | DF476 |

## DF 477 W

øext. 160 mm øint. 48,5 — 3,5 — OE

| BRAND MARCA | MODEL MODELO | C.C. | YEAR | FRONT | REAR |
|---|---|---|---|---|---|
| **YAMAHA 4 Wheels** | | | | | |
| YFS 200 R BLASTER | | 200 | 03- | DF477 | DF476 |
| YFM 250 | | 250 | 01- | DF477 | - |
| YFZ 350 A,B,D,E BANSHEE | | 350 | 90-06 | DF477 | DF476 |
| YFM 400 FGW GRIZZLY | | 400 | 07- | DF477 | |
| YFZ 450 S DER. | | 450 | 03-05 | DF477 | |
| YFZ 450 S IZQ. | | 450 | 03-05 | DF477 | DF730 |
| YFZ 450 S DER. | | 450 | 06- | DF477 | |
| YFZ 450 S IZQ. | | 450 | 06- | DF477 | DF732 |
| YFZ 450 R/V DER. | | 450 | 06- | DF477 | |
| YFZ 450 R/V IZQ. | | 450 | 06- | DF477 | |
| YFM 660 R RAPTOR | | 660 | 01- | DF477 | DF476 |
| YFM 700 R RAPTOR IZQ./LEFT | | 700 | 06-12 | DF477 | |
| YFM 700 R RAPTOR DER./RIGHT | | 700 | 06-12 | DF477 | DF732 |
| YFM 700 R RAPTOR IZQ./LEFT | | 700 | 13- | DF477 | |
| YFM 700 R RAPTOR DER./RIGHT | | 700 | 13- | DF477 | DF732 |

## DF 712 W

øext. 174 mm øint. 56 — 3,0 — OE

| BRAND MARCA | MODEL MODELO | C.C. | YEAR | FRONT | REAR |
|---|---|---|---|---|---|
| **HONDA 4 Wheels** | | | | | |
| TRX 250 EX | | 250 | 01- | DF712 | - |
| TRX 250 R | | 250 | 90- | DF712 | DF713 |
| TRX 250 X9 | | 250 | 09- | DF712 | - |
| TRX 300 EX | | 300 | 93-08 | DF712 | DF713 |
| TRX 300 X9 | | 300 | 09- | DF712 | |
| TRX 400 EX | | 400 | 99-08 | DF712 | DF013 |
| TRX 400 X9 | | 400 | 09-08 | DF712 | DF013 |
| TRX 450 R | | 450 | 04-09 | DF712 | DF895 |
| TRX 700 XX | | 700 | 08- | DF712 | |

## DF 713 W

øext. 187 mm øint. 72 — 4,0 — OE

| BRAND MARCA | MODEL MODELO | C.C. | YEAR | FRONT | REAR |
|---|---|---|---|---|---|
| **HONDA 4 Wheels** | | | | | |
| TRX 250 R | | 250 | 90- | DF712 | DF713 |
| TRX 300 EX | | 300 | 93-08 | DF712 | DF713 |

## DF 716 W

øext. 218,5 mm øint. 110,5 — 4,4 — OE

| BRAND MARCA | MODEL MODELO | C.C. | YEAR | FRONT | REAR |
|---|---|---|---|---|---|
| **CANNONDALE 4 Wheels** | | | | | |
| FX 400 IZQ. | | 400 | 01- | DF717 | DF716 |
| CANNIBAL 440 IZQ. | | 440 | 02- | DF717 | DF716 |
| BLAZE 440 IZQ. | | 440 | 02- | DF717 | DF716 |
| GLAMIS 440 IZQ. | | 440 | 03- | DF717 | DF716 |
| MOTO 440 IZQ. | | 440 | 02- | DF717 | DF716 |
| SPEED 440 IZQ. | | 440 | 02- | DF717 | DF716 |

## DF 717 W

øext. 165 mm øint. 51 — 4,4 — OE

| BRAND MARCA | MODEL MODELO | C.C. | YEAR | FRONT | REAR |
|---|---|---|---|---|---|
| **CANNONDALE 4 Wheels** | | | | | |
| FX 400 DER. | | 400 | 01- | DF717 | |
| FX 400 IZQ. | | 400 | 01- | DF717 | DF716 |
| CANNIBAL 440 DER. | | 440 | 02- | DF717 | |
| CANNIBAL 440 IZQ. | | 440 | 02- | DF717 | DF716 |
| BLAZE 440 DER. | | 440 | 02- | DF717 | |
| BLAZE 440 IZQ. | | 440 | 02- | DF717 | DF716 |
| GLAMIS 440 DER. | | 440 | 03- | DF717 | |
| GLAMIS 440 IZQ. | | 440 | 03- | DF717 | DF716 |
| MOTO 440 DER. | | 440 | 02- | DF717 | |
| MOTO 440 IZQ. | | 440 | 02- | DF717 | DF716 |
| SPEED 440 DER. | | 440 | 02- | DF717 | |
| SPEED 440 IZQ. | | 440 | 02- | DF717 | DF716 |

## DF 719 W

øext. 165 mm øint. 48,5 — 4,0 — OE

| BRAND MARCA | MODEL MODELO | C.C. | YEAR | FRONT | REAR |
|---|---|---|---|---|---|
| **BOMBARDIER 4 Wheels** | | | | | |
| TRAXTER 500 XL / XT | | 500 | 00- | DF719 | DF727 |
| QUEST 500/600 DER. | | 650 | 02- | DF719 | DF727 |
| QUEST 500/600 IZQ. | | 650 | 02- | DF719 | DF727 |
| DS 650 / BAJA DER. | | 650 | 00- | DF719 | DF727 |
| DS 650 / BAJA IZQ. | | 650 | 00- | DF719 | DF727 |
| TRAXTER MAX 650 DER. | | 650 | 04- | DF719 | |
| TRAXTER MAX 650 IZQ. | | 650 | 04- | DF719 | |

## DF 722 W

øext. 183 mm øint. 73 — 4,0 — OE

| BRAND MARCA | MODEL MODELO | C.C. | YEAR | FRONT | REAR |
|---|---|---|---|---|---|
| **POLARIS 4 Wheels** | | | | | |
| XPEDITION 325 | | 325 | 00- | DF722 | DF725 |
| MAGNUM 325 All Models | | 325 | 00-01 | DF722 | DF735 |
| MAGNUM 325 All Models | | 325 | 02- | DF722 | |
| SPORTSMAN 450 | | 450 | 06-06 | DF722 | |
| SPORTSMAN 450 | | 450 | 07- | DF722 | |
| RANGER 500 2X4/4X4 efi | | 500 | 08- | DF722 | |
| SCRAMBLER 500 2X4 | | 500 | 07- | DF722 | DF725 |
| RANGER 700 6X4 efi | | 700 | 08- | DF722 | |
| RANGER 700 XP 4X4 efi | | 700 | 08- | DF722 | |
| SPORTSMAN 800 efi | | 800 | 07- | DF722 | |
| SPORTSMAN 800 X2 efi | | 800 | 07- | DF722 | |
| SCRAMBLER All Models | | | 98-06 | DF722 | DF725 |
| TRAIL BLAZER All Models | | | 99- | DF722 | DF725 |

## DF 723 W

øext. 202 mm øint. 95 — 3,5 — OE

| BRAND MARCA | MODEL MODELO | C.C. | YEAR | FRONT | REAR |
|---|---|---|---|---|---|
| **ARCTIC CAT 4 Wheels** | | | | | |
| 250 2X4/4X4 TODOS | | 250 | 98-04 | DF723 | DF723 |
| 250 2X4/4X4 TODOS | | 250 | 05- | DF723 | DF723 |
| 300 2X4/4X4 TODOS | | 300 | 98-04 | DF723 | DF723 |
| 300 2X4 | | 300 | 10- | DF723 | DF723 |
| 300 4X4 | | 300 | 05- | DF723 | DF723 |
| 375 2X4/4X4 TODOS | | 375 | 98-04 | DF723 | DF723 |
| 400 2X4/4X4 TODOS | | 400 | 98-04 | DF723 | DF723 |
| 400 FI 5 4X4 | | 400 | 05- | DF723 | DF723 |
| 450 Hi | | 450 | 10- | DF723 | DF723 |
| 454 2X4/4X4 TODOS | | 454 | 98-04 | DF723 | DF723 |
| 500 2X4/4X4 TODOS | | 500 | 98-04 | DF723 | DF723 |
| 500 FI 5 | | 500 | 05- | DF723 | DF723 |
| 500 TRV | | 500 | 05- | DF723 | DF723 |
| 650 4X4 | | 650 | 05- | DF723 | DF723 |
| 650 H1 4X4 | | 650 | 05- | DF723 | DF723 |
| 650 PROWLER XT | | 650 | 05- | DF723 | DF723 |
| 650 TRV | | 650 | 09- | DF723 | DF723 |
| 700 DIESEL TRV | | 700 | 06- | DF723 | DF723 |
| 700 H1 TRV | | 700 | 09- | DF723 | DF723 |
| 700 SUPER DUTY DIESEL | | 700 | 10- | DF723 | DF723 |
| 1000 THUNDERCAT | | 1000 | 08- | DF723 | DF723 |
| 1000 H2 TRV | | 1000 | 09- | DF723 | DF723 |

## DF 725 W

øext. 177 mm øint. 51,7 — 4,5 — OE

| BRAND MARCA | MODEL MODELO | C.C. | YEAR | FRONT | REAR |
|---|---|---|---|---|---|
| **POLARIS 4 Wheels** | | | | | |
| XPEDITION 325 | | 325 | 00- | DF722 | DF725 |
| SPORT 400 | | 400 | 99- | | DF725 |
| XPEDITION 425 | | 425 | 00- | | DF725 |
| MAGNUM 500 All Models | | 500 | 99-01 | | DF725 |
| SCRAMBLER 500 2X4 | | 500 | 07- | DF722 | DF725 |
| SCRAMBLER 500 4X4 | | 500 | 07- | | DF725 |
| SCRAMBLER All Models | | | 98-06 | DF722 | DF725 |
| TRAIL BLAZER All Models | | | 99- | DF722 | DF725 |



**OE:** Original equipment (original replacement disc) - **OE:** Equipo original (disco de remplazo del original) For other models years previous to 1990 visit **www.galferonline.es** - Para otros modelos anteriores al año 1990 visitar **www.galferonline.es**
For consult TÜV (ABE) type approvals visit **www.galfermoto.com --> DOWNLOAD --> TÜV CERTIFICATIONS** - Para consultar las homologaciones TÜV (ABE) visitar **www.galfermoto.com --> DESCARGAS --> CERTIFICACIONES TÜV**

## DF 727 W

øext. 196 mm øint. 81,3 — 4,0 — OE

| BRAND MARCA | MODEL MODELO | C.C. | YEAR | FRONT | REAR |
|---|---|---|---|---|---|
| **BOMBARDIER 4 Wheels** | | | | | |
| TRAXTER 500 XL / XT | | 500 | 00- | DF719 | DF727 |
| QUEST 500/600 DER. | | 650 | 02- | DF719 | DF727 |
| QUEST 500/600 IZQ. | | 650 | 02- | DF719 | DF727 |
| DS 650 / BAJA DER. | | 650 | 00- | DF719 | DF727 |
| DS 650 / BAJA IZQ. | | 650 | 00- | DF719 | DF727 |
| OUTLANDER 800 DER. | | 800 | 06- | | DF727 |
| OUTLANDER 800 IZQ. | | 800 | 06- | | DF727 |

## DF 729 W

øext. 160 mm øint. 48 — 4,9 — OE

| BRAND MARCA | MODEL MODELO | C.C. | YEAR | FRONT | REAR |
|---|---|---|---|---|---|
| **YAMAHA 4 Wheels** | | | | | |
| YFA 1B 125 BREEZE (KIT YAMAHA FR.) | | 125 | 91- | - | DF729 |

## DF 730 W

øext. 199 mm øint. 51,2 — 3,5 — OE

| BRAND MARCA | MODEL MODELO | C.C. | YEAR | FRONT | REAR |
|---|---|---|---|---|---|
| **YAMAHA 4 Wheels** | | | | | |
| YFZ 450 S IZQ. | | 450 | 03-05 | DF477 | DF730 |

## DF 731 W

øext. 163 mm øint. 51,7 — 3,5 — OE

| BRAND MARCA | MODEL MODELO | C.C. | YEAR | FRONT | REAR |
|---|---|---|---|---|---|
| **KAWASAKI 4 Wheels** | | | | | |
| KFX 450 R LEFT/IZQ. | | 450 | 07- | DF731 | |
| KFX 450 R RIGHT/DER. | | 450 | 07- | DF731 | DF869 |
| KFX 700 DER. | | 700 | 03- | DF731 | - |
| KFX 700 IZQ. | | 700 | 03- | DF731 | - |
| KFX 700 TEAM GREEN DER. | | 700 | 05- | DF731 | - |
| KFX 700 TEAM GREEN IZQ. | | 700 | 05- | DF731 | - |

## DF 732 W

øext. 200 mm øint. 51,5 — 3,6 — OE

| BRAND MARCA | MODEL MODELO | C.C. | YEAR | FRONT | REAR |
|---|---|---|---|---|---|
| **YAMAHA 4 Wheels** | | | | | |
| YFZ 450 S IZQ. | | 450 | 06- | DF477 | DF732 |
| YFM 700 R RAPTOR DER./RIGHT | | 700 | 06-12 | DF477 | DF732 |
| YFM 700 R RAPTOR DER./RIGHT | | 700 | 13- | DF477 | DF732 |

## DF 733 W

øext. 160 mm øint. 48 — 3,1 — OE

| BRAND MARCA | MODEL MODELO | C.C. | YEAR | FRONT | REAR |
|---|---|---|---|---|---|
| **SUZUKI 4 Wheels** | | | | | |
| LT R 450 LEFT/IZQ. | | 450 | 06- | DF733 | |
| LT R 450 RIGHT/DER. | | 450 | 06- | DF733 | DF734 |

## DF 734 W

øext. 190 mm øint. 78,5 — 4,0 — OE

| BRAND MARCA | MODEL MODELO | C.C. | YEAR | FRONT | REAR |
|---|---|---|---|---|---|
| **SUZUKI 4 Wheels** | | | | | |
| LT R 450 RIGHT/DER. | | 450 | 06- | DF733 | DF734 |

## DF 742 W

øext. 180 mm øint. 54 — 5,0 — OE

| BRAND MARCA | MODEL MODELO | C.C. | YEAR | FRONT | REAR |
|---|---|---|---|---|---|
| **GAS GAS 4 Wheels** | | | | | |
| HP WILD 50 | | 50 | 03- | DF742 | DF743 |
| HP WILD 240 | | 240 | 03- | DF742 | DF743 |
| HP WILD 300 | | 300 | 03- | DF742 | DF743 |
| HP WILD 450 | | 450 | 03- | DF742 | DF743 |
| HP WILD 515 | | 515 | 09- | DF742 | DF743 |

## DF 743 W

øext. 220 mm øint. 108 — 4,5 — OE

| BRAND MARCA | MODEL MODELO | C.C. | YEAR | FRONT | REAR |
|---|---|---|---|---|---|
| **GAS GAS 4 Wheels** | | | | | |
| HP WILD 50 | | 50 | 03- | DF742 | DF743 |
| HP WILD 240 | | 240 | 03- | DF742 | DF743 |
| HP WILD 300 | | 300 | 03- | DF742 | DF743 |
| HP WILD 450 | | 450 | 03- | DF742 | DF743 |
| HP WILD 515 | | 515 | 09- | DF742 | DF743 |

## DF 841 W

øext. 200 mm øint. 72 — 3,5 — OE

| BRAND MARCA | MODEL MODELO | C.C. | YEAR | FRONT | REAR |
|---|---|---|---|---|---|
| **YAMAHA 4 Wheels** | | | | | |
| YXR 660 RHINO 4X4 IZQ./LEFT | | 660 | 04- | DF841 | |
| YXR 660 RHINO 4X4 DER./RIGHT | | 660 | 04- | DF841 | DF842 |
| YXR 700 RHINO 4X4 IZQ./LEFT | | 700 | 08- | DF841 | |
| YXR 700 RHINO 4X4 DER./RIGHT | | 700 | 08- | DF841 | |

## DF 842 W

øext. 165 mm øint. 46 — 5,0 — OE

| BRAND MARCA | MODEL MODELO | C.C. | YEAR | FRONT | REAR |
|---|---|---|---|---|---|
| **YAMAHA 4 Wheels** | | | | | |
| YXR 660 RHINO 4X4 DER./RIGHT | | 660 | 04- | DF841 | DF842 |

## DF 869 W

øext. 200 mm øint. 70 — 3,6 — OE

| BRAND MARCA | MODEL MODELO | C.C. | YEAR | FRONT | REAR |
|---|---|---|---|---|---|
| **KAWASAKI 4 Wheels** | | | | | |
| KFX 450 R RIGHT/DER. | | 450 | 07- | DF731 | DF869 |

## DF 878 W

øext. 180 mm øint. 58 — 4,0 — OE

| BRAND MARCA | MODEL MODELO | C.C. | YEAR | FRONT | REAR |
|---|---|---|---|---|---|
| **KYMCO 4 Wheels** | | | | | |
| KXR 250 SPORT | | 250 | 04- | DF878 | DF879 |
| MAXXER 250 | | 250 | 06- | DF878 | |
| MXU 250 | | 250 | 05- | DF878 | DF879 |
| URBAN QUAD 250 | | 250 | 06- | DF878 | DF879 |
| MAXXER 300 | | 300 | 06- | DF878 | |
| MXU 300 | | 300 | 05- | DF878 | DF879 |
| MXU 300 R | | 300 | 10- | DF878 | DF879 |
| MXU 500 | | 500 | 06- | DF878 | |
| MXU 500 IRS | | 500 | 09- | DF878 | |

## DF 879 W

øext. 220 mm øint. 88,5 — 4,0 — OE

| BRAND MARCA | MODEL MODELO | C.C. | YEAR | FRONT | REAR |
|---|---|---|---|---|---|
| **KYMCO 4 Wheels** | | | | | |
| KXR 250 SPORT | | 250 | 04- | DF878 | DF879 |
| MXU 250 | | 250 | 05- | DF878 | DF879 |
| URBAN QUAD 250 | | 250 | 06- | DF878 | DF879 |
| MXU 300 | | 300 | 05- | DF878 | DF879 |
| MXU 300 R | | 300 | 10- | DF878 | DF879 |

## DF 894 W

øext. 170 mm øint. 108 — 4,0 — OE

| BRAND MARCA | MODEL MODELO | C.C. | YEAR | FRONT | REAR |
|---|---|---|---|---|---|
| **KAWASAKI 4 Wheels** | | | | | |
| KFX 400 | | 400 | 03- | DF894 | DF048 |
| **SUZUKI 4 Wheels** | | | | | |
| LT Z 400 | | 400 | 03- | DF894 | DF048 |

## DF 895 W

øext. 190 mm øint. 72 — 4,0 — OE

| BRAND MARCA | MODEL MODELO | C.C. | YEAR | FRONT | REAR |
|---|---|---|---|---|---|
| **HONDA 4 Wheels** | | | | | |
| | TRX 450 R | 450 | 04-09 | DF712 | DF895 |

## DF 898 W

øext. 177 mm øint. 64 — 4,0 — OE

| BRAND MARCA | MODEL MODELO | C.C. | YEAR | FRONT | REAR |
|---|---|---|---|---|---|
| **POLARIS 4 Wheels** | | | | | |
| | PREDATOR 500 | 500 | 03- | DF898 | DF899 |

## DF 899 W

øext. 196 mm øint. 76,5 — 4,0 — OE

| BRAND MARCA | MODEL MODELO | C.C. | YEAR | FRONT | REAR |
|---|---|---|---|---|---|
| **POLARIS 4 Wheels** | | | | | |
| | PREDATOR 500 | 500 | 03- | DF898 | DF899 |

## MF 002

110 x 25 mm

| BRAND MARCA | MODEL MODELO | C.C. | YEAR | FRONT | REAR |
|---|---|---|---|---|---|
| **E-TON 4 Wheels** | | | | | |
| | CHALLENGE CLX 150 | 150 | 03- | MF002 | FD117 |
| | VIPER 150 / RLX 150 | 150 | 05- | MF002 | FD117 |
| | YUKON ST ELX 150 | 150 | 03- | MF002 | FD117 |
| **HONDA 4 Wheels** | | | | | |
| | TRX 90 | 90 | 93-06 | MF002 | MF |
| | TRX 90 EX | 90 | 07-08 | MF002 | MF |
| | TRX 90 X9 | 90 | 09- | MF002 | MF |
| **KYMCO 4 Wheels** | | | | | |
| | Mxer 50 | 50 | 03- | MF002 | FD261 |
| | Mxer 150 | 150 | 03- | MF002 | FD261 |

## MF 006

130 x 30 mm

| BRAND MARCA | MODEL MODELO | C.C. | YEAR | FRONT | REAR |
|---|---|---|---|---|---|
| **HONDA 4 Wheels** | | | | | |
| | TRX 250 RECON | 250 | 03-05 | FD076 | MF006 |
| | TRX 250 X9 | 250 | 09- | FD076 | MF006 |

## MF 044

160 x 30 mm

| BRAND MARCA | MODEL MODELO | C.C. | YEAR | FRONT | REAR |
|---|---|---|---|---|---|
| **HONDA 4 Wheels** | | | | | |
| | TRX 420 FOURTRAX RANCHER | 420 | 07- | FD076 | MF044 |

## MF 152

160 x 30 mm

| BRAND MARCA | MODEL MODELO | C.C. | YEAR | FRONT | REAR |
|---|---|---|---|---|---|
| **KAWASAKI 4 Wheels** | | | | | |
| | KVF 400 PRAIRIE | 400 | 97- | FD095 | MF152 |

## MF 451

130 x 28 mm

| BRAND MARCA | MODEL MODELO | C.C. | YEAR | FRONT | REAR |
|---|---|---|---|---|---|
| **YAMAHA 4 Wheels** | | | | | |
| | YFM 80 D SHIFT | 80 | 92- | MF458 | MF451 |
| | YFA 1B 125 BREEZE | 125 | 91- | MF458 | MF451 |

## MF 453

110 x 25 mm

| BRAND MARCA | MODEL MODELO | C.C. | YEAR | FRONT | REAR |
|---|---|---|---|---|---|
| **TGB 4 Wheels** | | | | | |
| | 101 S | 100 | 06- | FD094 | MF453 |

## MF 457

160 x 30 mm

| BRAND MARCA | MODEL MODELO | C.C. | YEAR | FRONT | REAR |
|---|---|---|---|---|---|
| **YAMAHA 4 Wheels** | | | | | |
| | YFM 350 FWB BIG BEAR | 350 | 99- | FD095 | MF457 |
| | YFM 400 FW BIG BEAR | 400 | 00- | FD095 | MF457 |
| | YFM 400 FWE KODIAK | 400 | 93-99 | MF482 | MF457 |
| | YFM 400 TODOS MODELOS | 400 | 00- | FD095 | MF457 |
| | YFM 600 GRIZZLY/HUNTING | 600 | 98-01 | FD076 | MF457 |
| | YFM 600 FWA HUNTER | 600 | 01- | FD076 | MF457 |

## MF 458

110 x 25 mm

| BRAND MARCA | MODEL MODELO | C.C. | YEAR | FRONT | REAR |
|---|---|---|---|---|---|
| **YAMAHA 4 Wheels** | | | | | |
| | YFM 80 D SHIFT | 80 | 92- | MF458 | MF451 |
| | YFM 80 E | 80 | 93- | MF458 | |
| | YFA 1B 125 BREEZE | 125 | 91- | MF458 | MF451 |
| | YFA 1B 125 BREEZE (KIT YAMAHA FR.) | 125 | 91- | MF458 | FD220 |
| | YFA 1D/E | 125 | 92-93 | MF458 | |
| | YFB 250 D/E TIMB | 250 | 92-93 | MF458 | MF471 |



**OE:** Original equipment (original replacement disc) - **OE:** Equipo original (disco de remplazo del original) For other models years previous to 1990 visit **www.galferonline.es** - Para otros modelos anteriores al año 1990 visitar **www.galferonline.es**
For consult TÜV (ABE) type approvals visit **www.galfermoto.com --> DOWNALOAD --> TÜV CERTIFICATIONS** - Para consultar las homologaciones TÜV (ABE) visitar **www.galfermoto.com --> DESCARGAS --> CERTIFICACIONES TÜV**

GALFER MOTO

# FD

## BRAKE PADS
## PASTILLAS DE FRENO
### PASTIGLIE FRENO
### PLAQUETTES DE FREIN

## GALFER FD 012

G1054
G1050
G1805
G1371

mm 39,8 x 56,3
7,0

A A

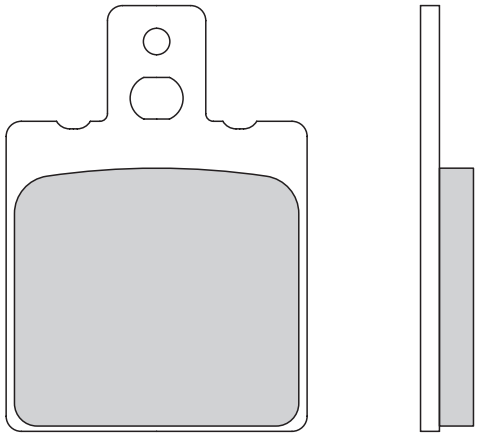

## GALFER FD 013

G1054
G1805
G1370

mm 55,8 x 54,0
9,0

A A

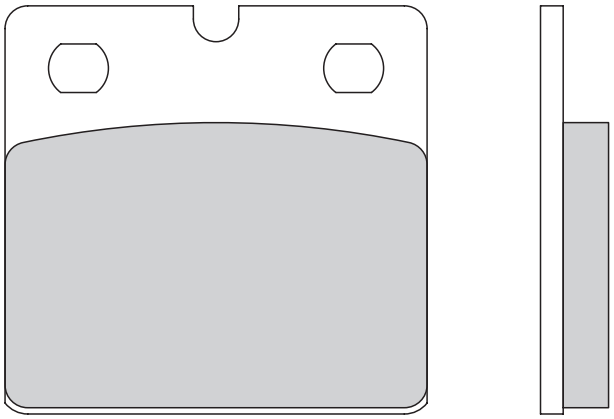

## GALFER FD 016

G1054

mm 67,1 x 48,9
9,5

A A

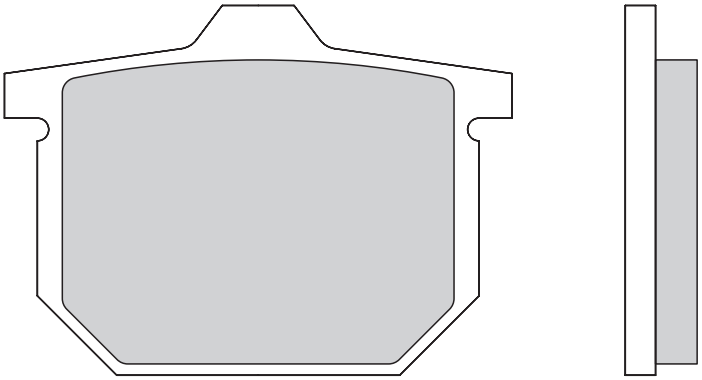

## GALFER FD 017

G1054

mm 67,4 x 50,0
11,0

A A

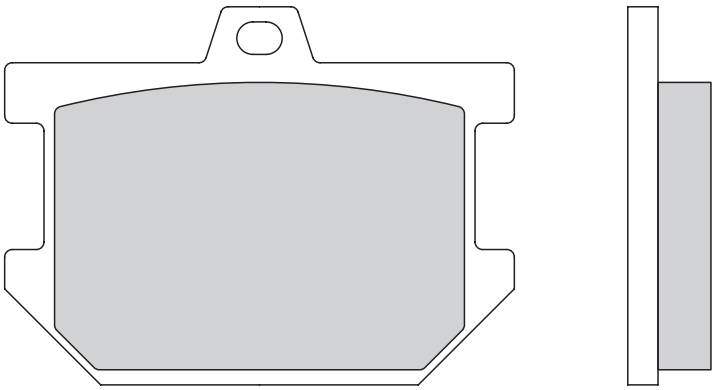



SEMI METAL → G1054 SCOOTER → G1050 TRIAL TOP → G1805 SINTERED → G1370-71 G1375 G1380-83 G1396 G1397 GP → G1003-G1300

A A

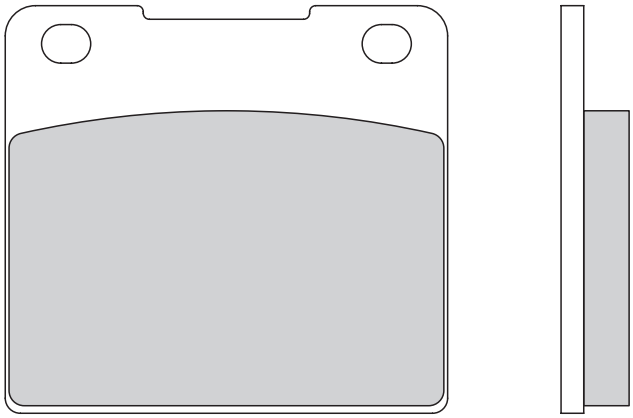

GALFER
**FD 022 G1054**

mm 58,5 x 53,9

9,0

A A

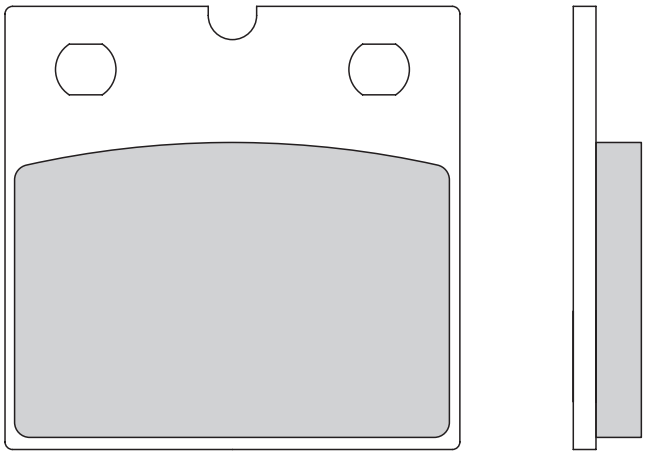

GALFER
**FD 044 G1054**

mm 60,15 x 58,6

9,0

A A

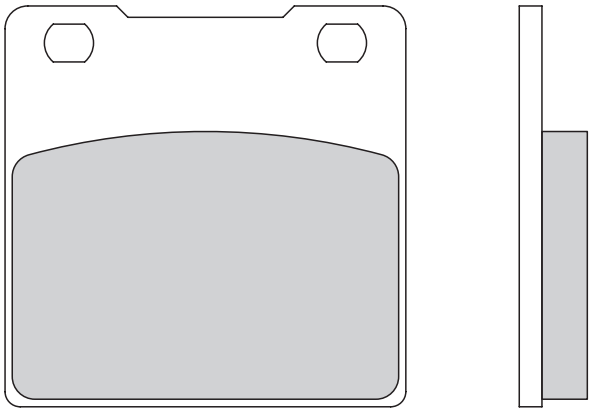

GALFER
**FD 045 G1054**

mm 53,0 x 53,0

9,0

**FD111** (th. 8,6mm) can replace **FD045** (not vice versa) | **FD111** (th. 8,6mm) puede sustituir **FD045** (no al revés)

A A

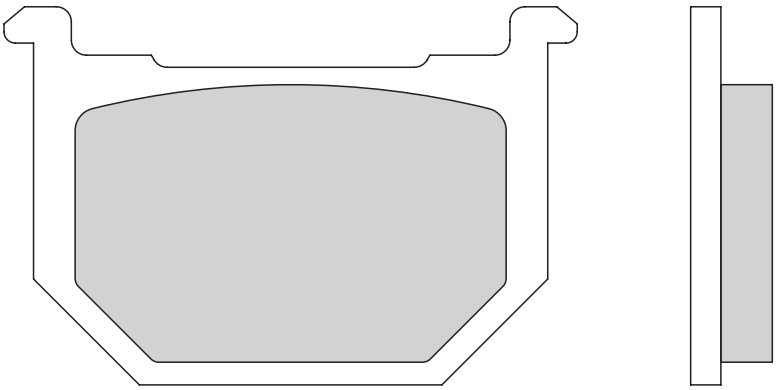

GALFER
**FD 046 G1054**

mm 75,8 x 50,0

10,8

## GALFER FD 047 G1054

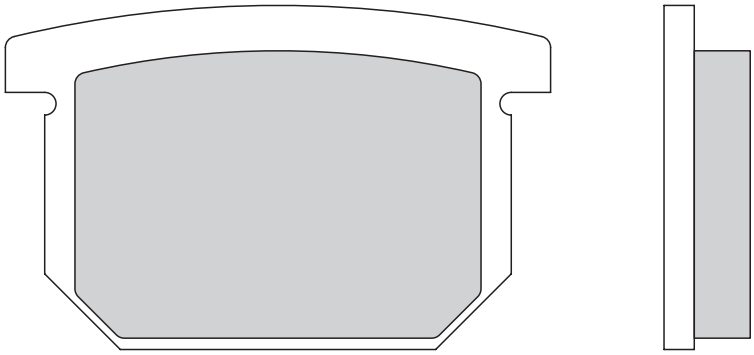

A | A

mm 72,1 x 45,5

11,4

## GALFER FD 048 G1054 G1050 G1805

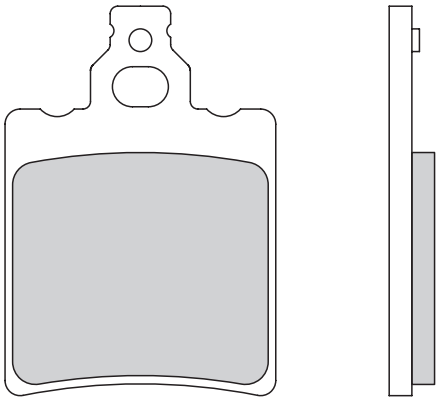

A | A

mm 35,9 x 51,5

6,0

## GALFER FD 051 G1054

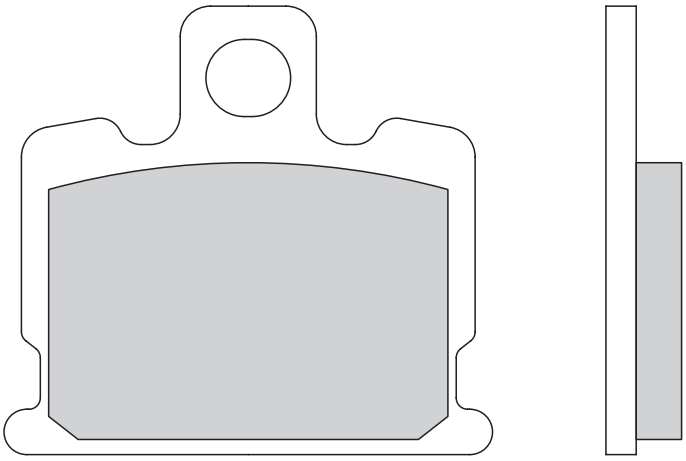

A | A

mm 64,6 x 59,3

10,0

## GALFER FD 052 G1054

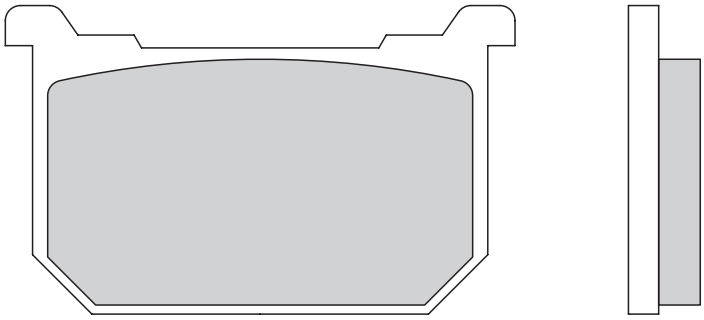

A | A

mm 67,4 x 40,6

9,5



SEMI METAL → G1054 SCOOTER → G1050 TRIAL TOP → G1805 SINTERED → G1370-71 G1375 G1380-83 G1396 G1397 GP → G1003-G1300

A | A

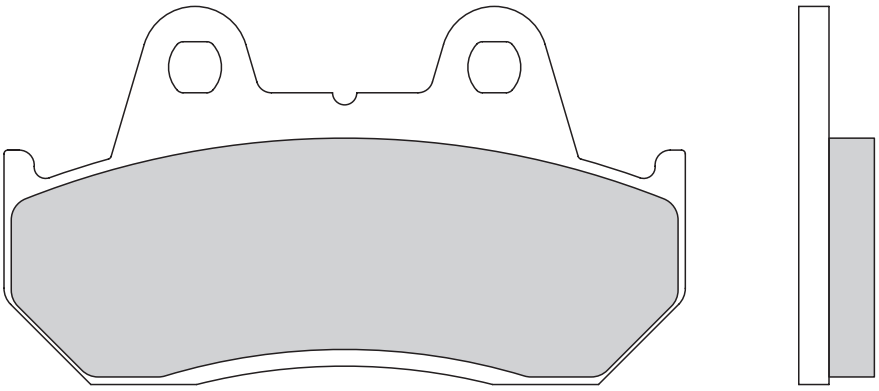

GALFER
**FD 054**
G1054
G1050
G1370

mm 90,1 x 50,0
10,0

A | A

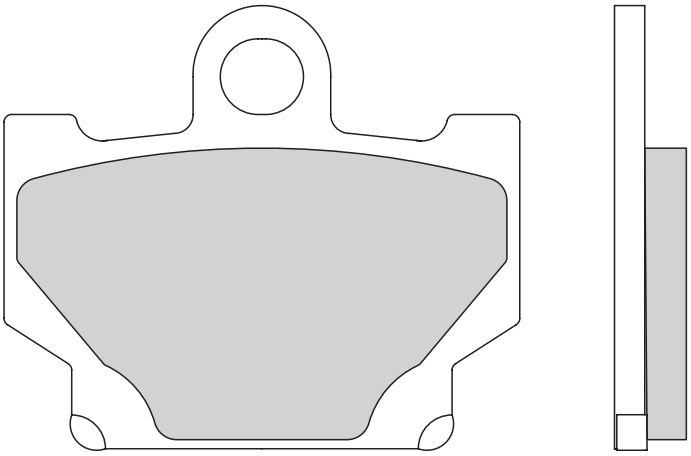

GALFER
**FD 056**
G1054

mm 68,2 x 58,8
9,5

A | A

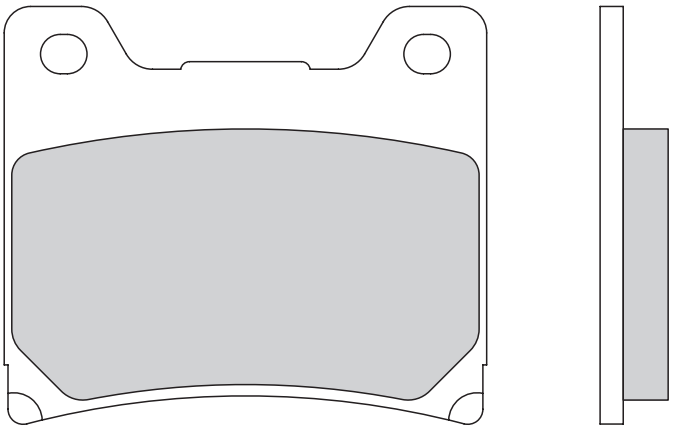

GALFER
**FD 057**
G1054
G1050
G1371

mm 63,9 x 55,2
9,0

A | A

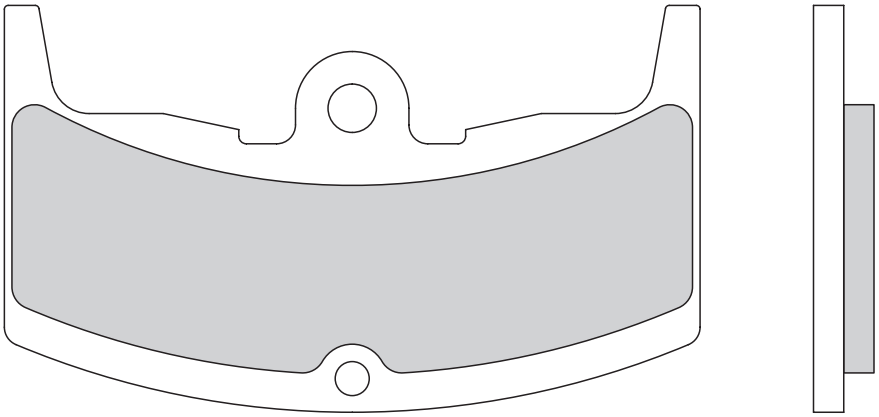

GALFER
**FD 060**
G1054

mm 92,0 x 53,8
8,0

## GALFER FD 062

G1054
G1370

mm 70,0 x 43,5
10,0

mm 110,7 x 51,0
10,0

A B

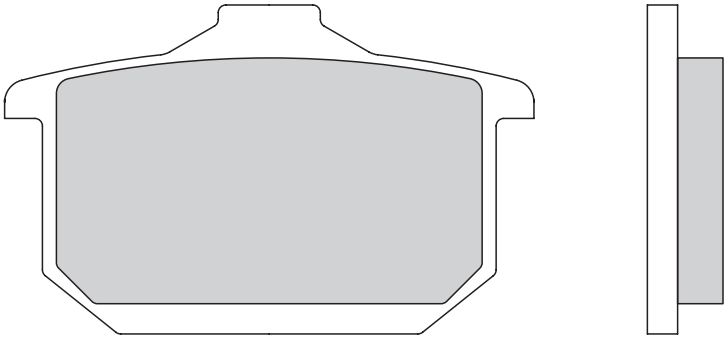

A B

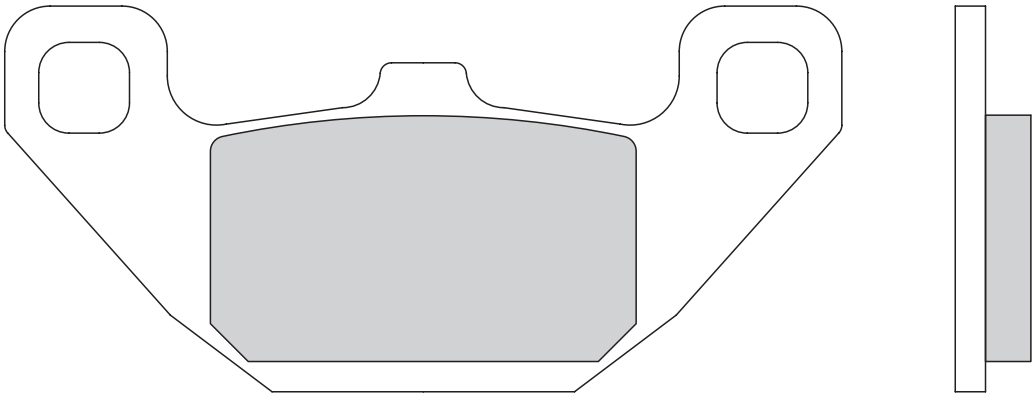

## GALFER FD 063

G1054
G1050
G1805
G1397

mm 81,8 x 42,3
7,2

A A

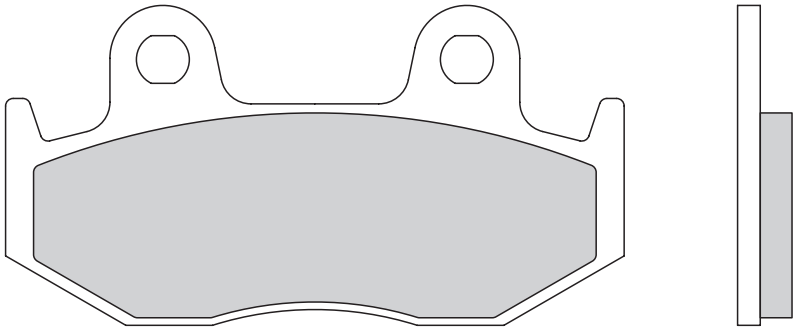

## GALFER FD 065

G1054
G1050
G1805
G1380

mm 36,0 x 45,0
6,0

A A

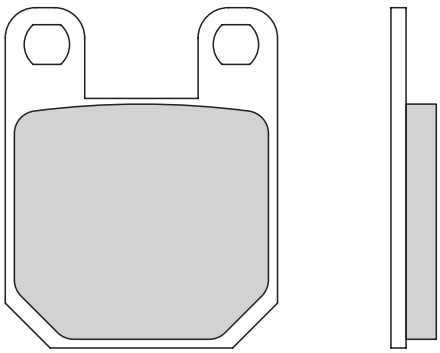

A | A

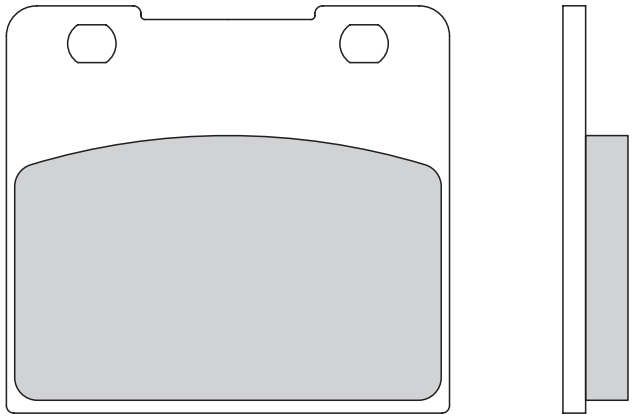

**GALFER FD 066**

G1054
G1370

mm 58,6 x 53,9

8,6

A | A

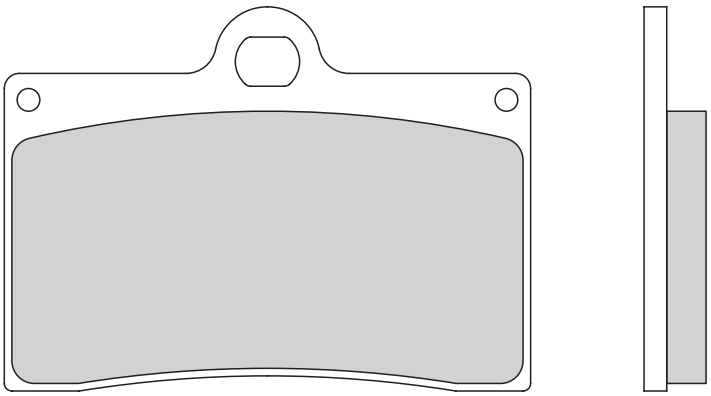

**GALFER FD 068**

G1054
G1050
G1370
G1375
G1003

mm 69,6 x 51,0

8,2

A | A

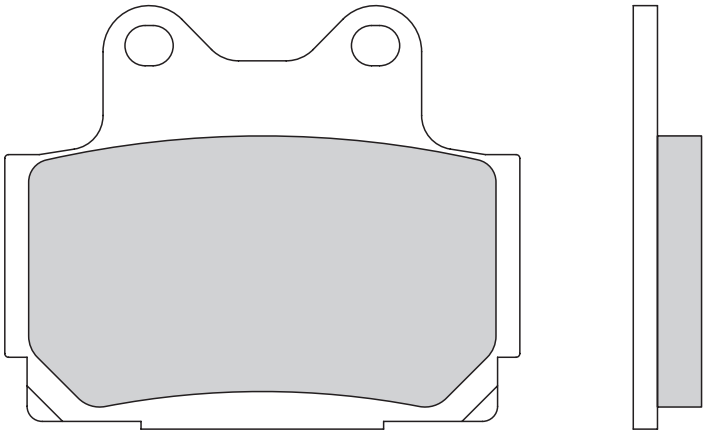

**GALFER FD 069**

G1054
G1370

mm 68,1 x 56,0

9,0

A | A

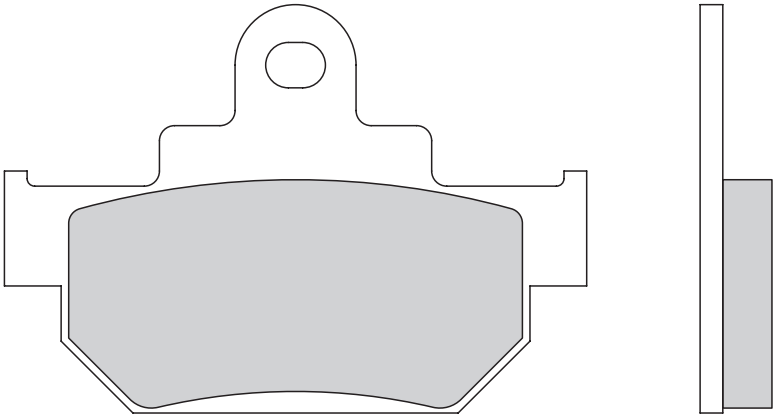

**GALFER FD 070**

G1054

mm 77,0 x 54,0

9,5

**FD209** (th. 7,0mm) can replace **FD070** (not vice versa) | **FD209** (th. 7,0mm) puede sustituir **FD070** (no al revés)

## GALFER FD 071

G1054
G1805

mm 31,6 x 52,1
5,5

A A

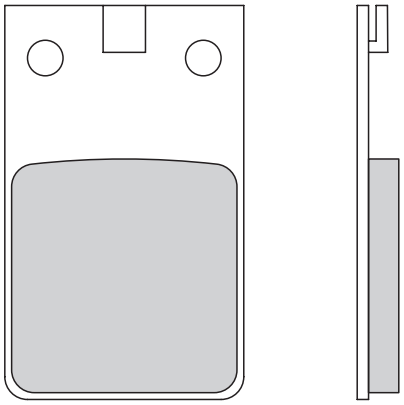

## GALFER FD 072

G1054

mm 70,8 x 39,0
10,0

A A

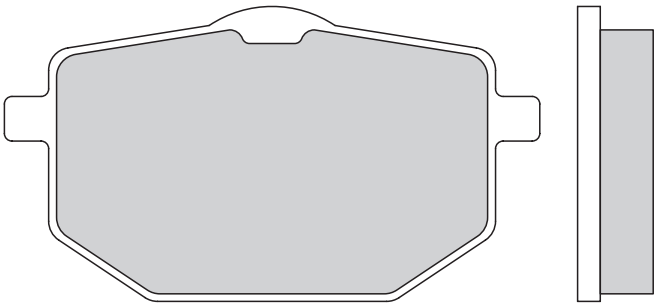

## GALFER FD 073

G1054
G1050
G1805

mm 77,4 x 42,3
7,0

A A

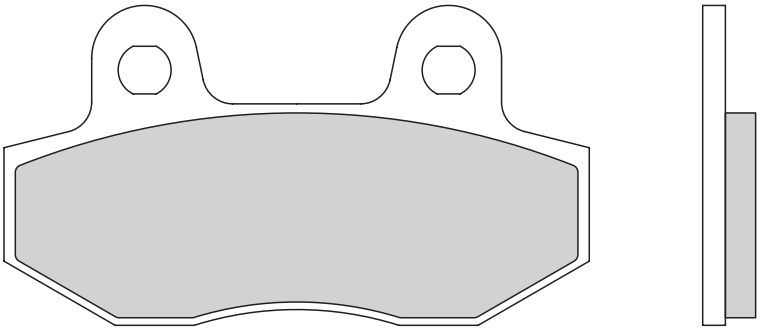

## GALFER FD 074

G1054
G1050
G1805
G1370

mm 79,0 x 47,8
7,0

A A

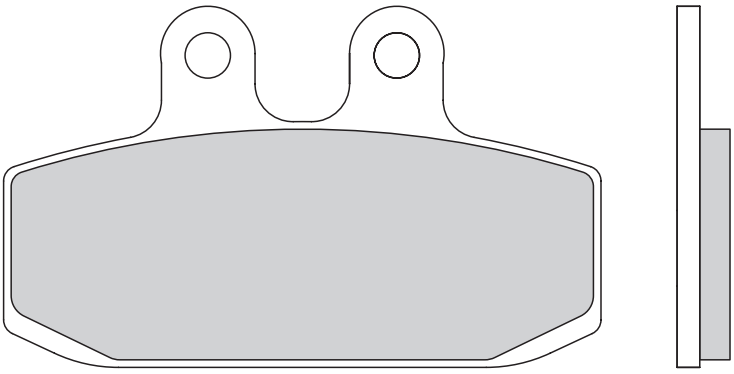



SEMI METAL → G1054 SCOOTER → G1050 TRIAL TOP → G1805 SINTERED → G1370-71 G1375 G1380-83 G1396 G1397 GP → G1003-G1300

A | B

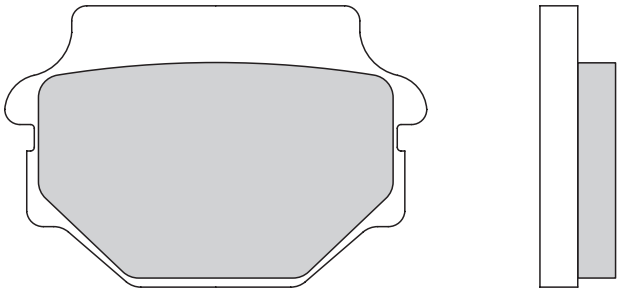

## GALFER FD 075

G1054
G1050
G1805
G1396

mm 55,8 x 37,2
10,0

A | B

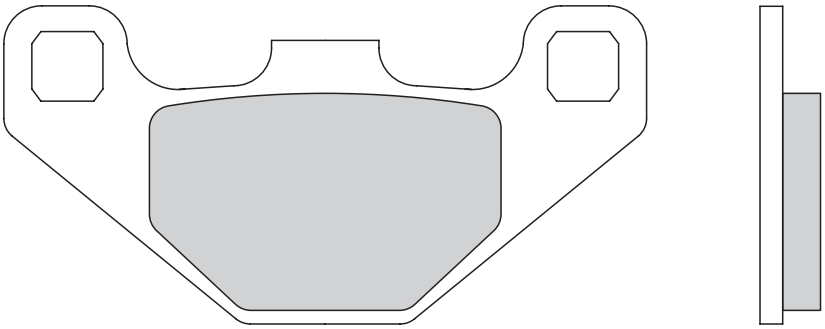

mm 85,0 x 42,1
8,0

A | A

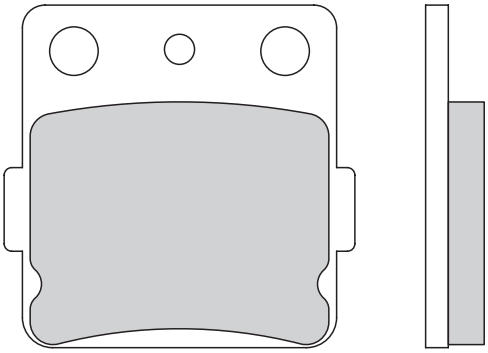

## GALFER FD 076

G1054
G1805
G1396
G1397

mm 46,4 x 45,3
7,8

**FD299** (th. 6,5mm) can replace **FD076** (not vice versa) | **FD299** (th. 6,5mm) puede sustituir **FD076** (no al revés)

A | A

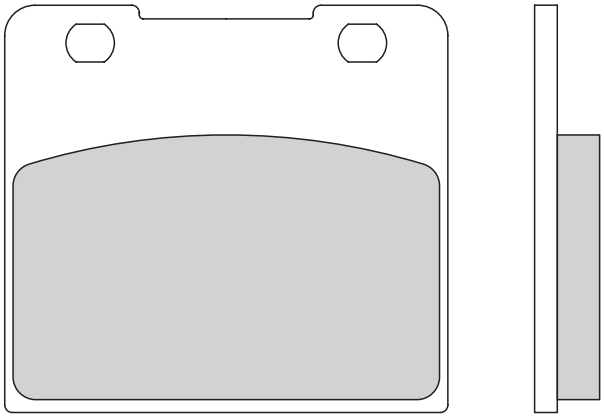

## GALFER FD 078

G1054

mm 58,6 x 53,9
8,6

## GALFER FD 079

G1054
G1050
G1805
G1370

mm 71,3 x 36,2

8,5

A A

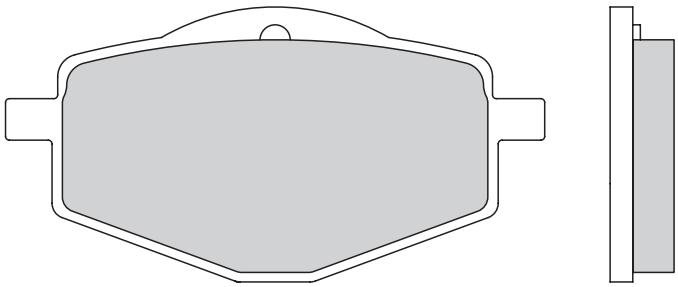

## GALFER FD 080

G1054

mm 91,3 x 29,9

7,0

A A

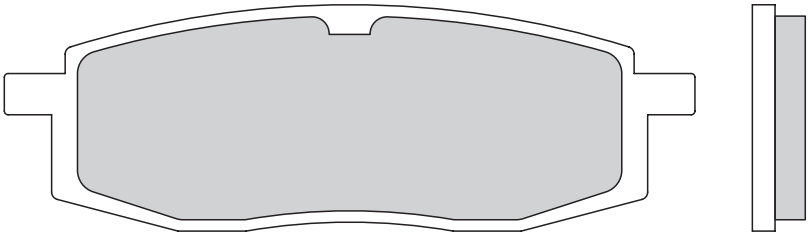

## GALFER FD 081

G1054

mm 52,6 x 44,1

7,5

A A

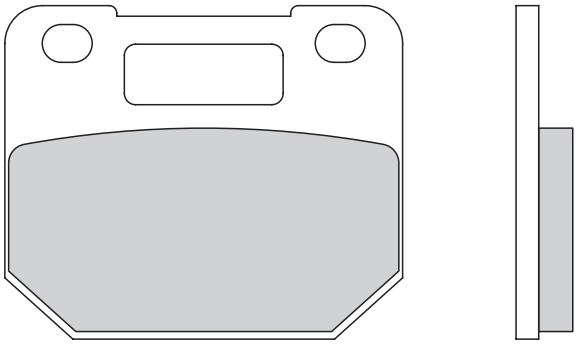

## GALFER FD 082

G1054
G1370

mm 88,0 x 46,0

9,0

A A

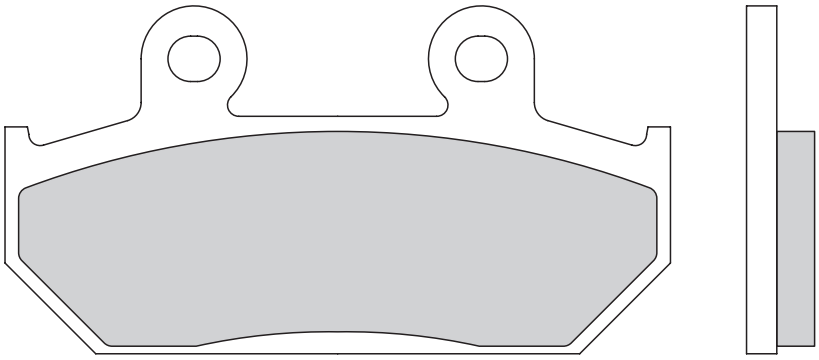



SEMI METAL → G1054 SCOOTER → G1050 TRIAL TOP → G1805 SINTERED → G1370-71 G1375 G1380-83 G1396 G1397 GP → G1003-G1300

A | A

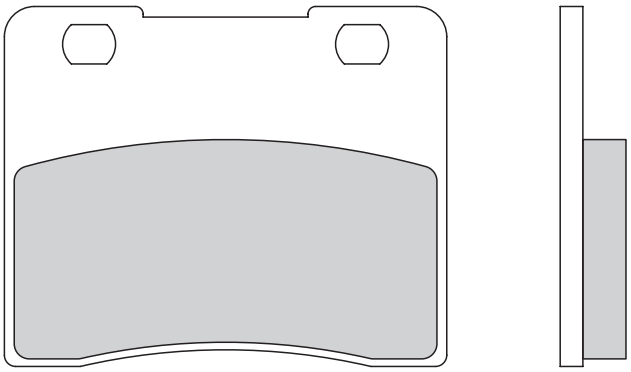

GALFER
**FD 083**
G1054

mm 58,5 x 47,6

8,7

A | A

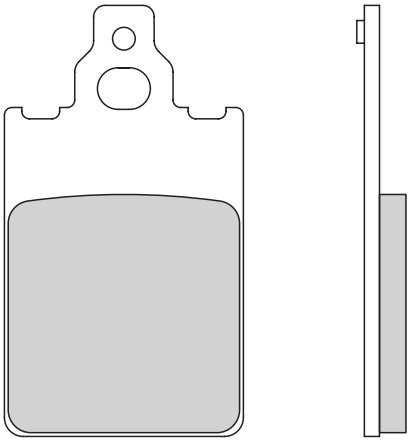

GALFER
**FD 084**
G1054
G1050
G1805

mm 31,6 x 57,0

5,5

A | A

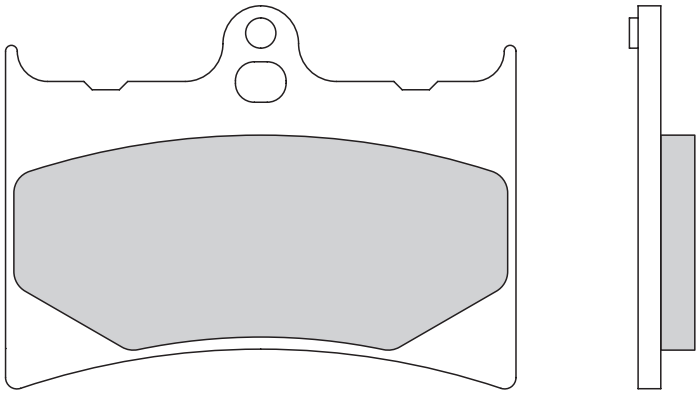

GALFER
**FD 085**
G1054
G1050

mm 67,5 x 50,7

7,5

A | B

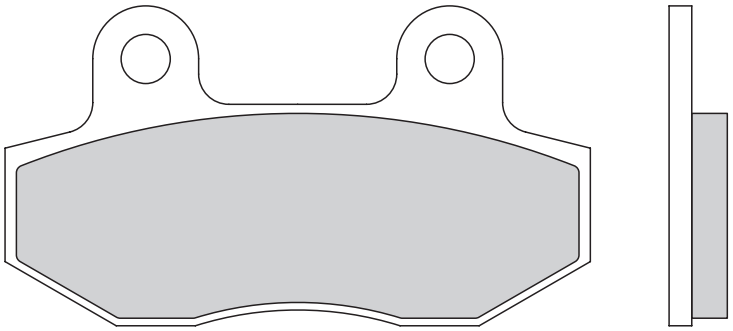

GALFER
**FD 086**
G1054
G1805
G1370
G1396
G1397

mm 77,4 x 42,3

7,7

mm 98,8 x 42,3
7,5

A B

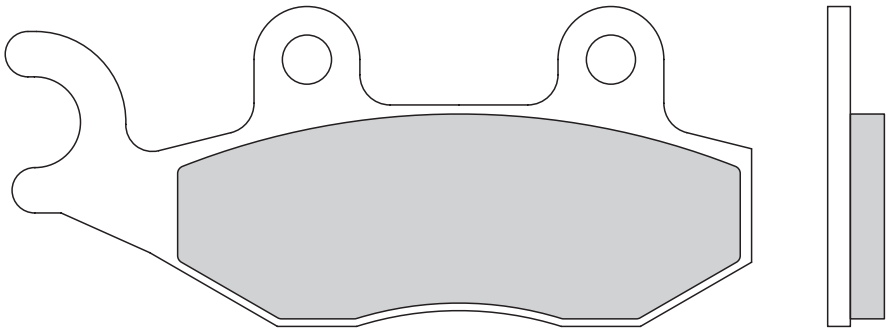

GALFER
## FD 087
G1054
G1370

mm 74,8 x 54,3
8,2

A A

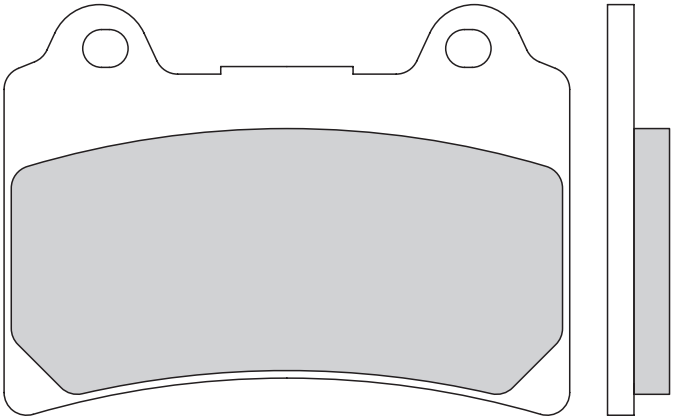

GALFER
## FD 089
G1054

mm 99,8 x 46,2
8,3

A A

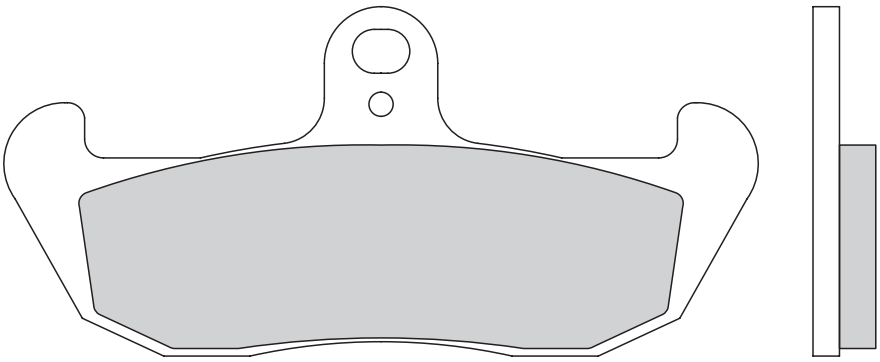

GALFER
## FD 090
G1054
G1370

mm 95,2 x 34,4
8,8

A B

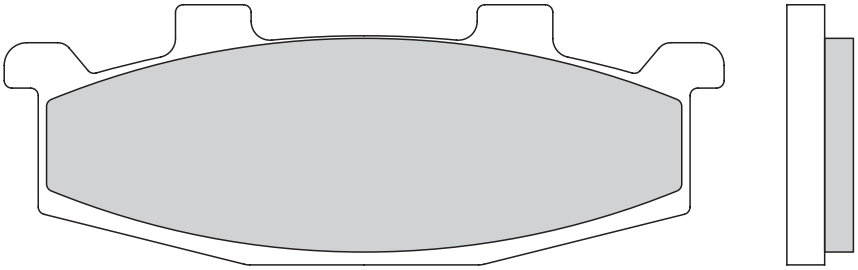



SEMI METAL → G1054 SCOOTER → G1050 TRIAL TOP → G1805 SINTERED → G1370-71 G1375 G1380-83 G1396 G1397 GP → G1003-G1300

A | B

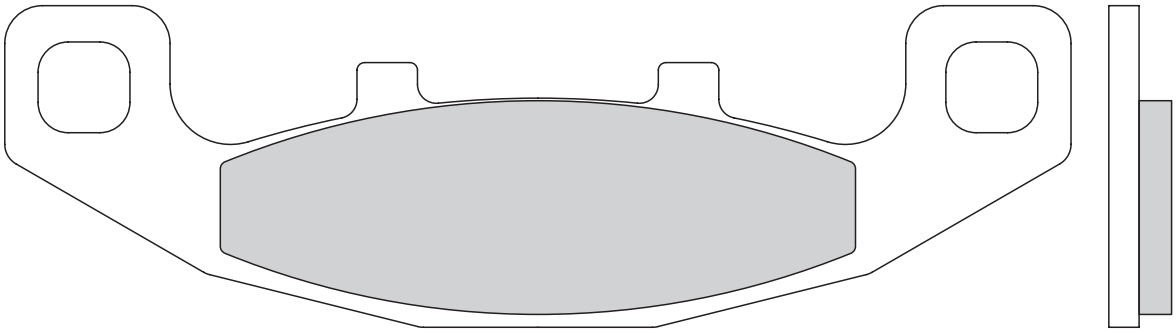

mm 141,0 x 42,4
8,3

A | B

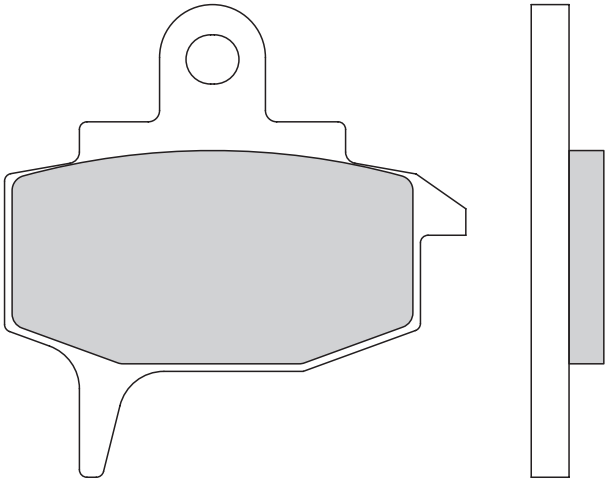

GALFER
FD
091
G1054
G1396

mm 61,0 x 62,5
9,6

A | B

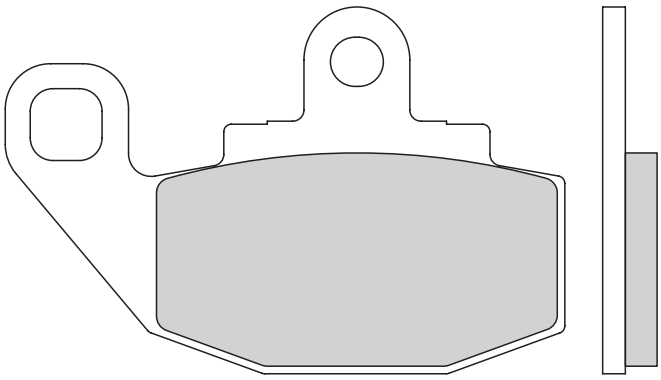

mm 74,0 x 48,5
7,2

A | A[1]

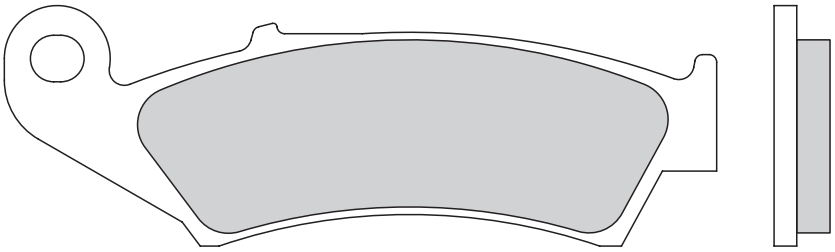

GALFER
FD
092
G1054
G1805
G1396

mm 94,2 x 31,8
7,4

## GALFER FD 093

G1054
G1805
G1396

mm 75,0 x 36,0
10,0

A | A1

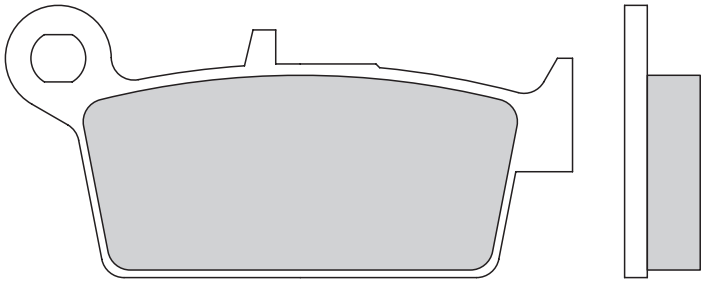

## GALFER FD 094

G1054
G1050
G1805
G1396

mm 47,4 x 37,0
10,0

A | B

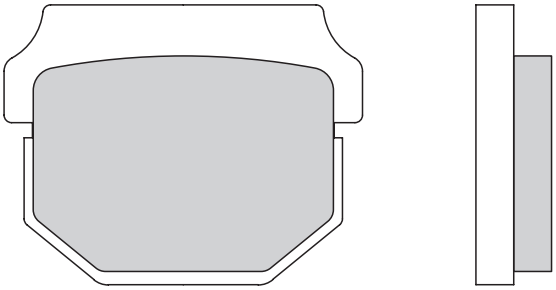

mm 85,0 x 42,1
7,8

A | B

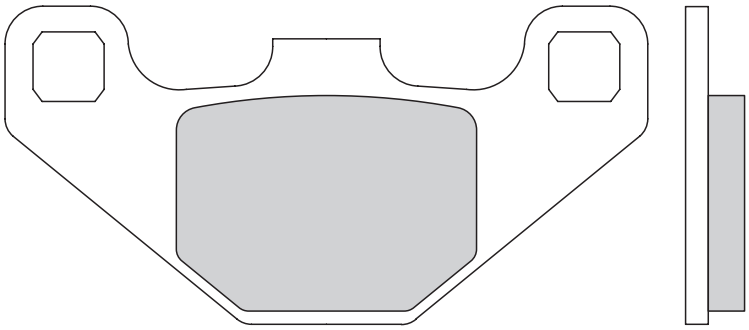

## GALFER FD 095

G1054
G1050
G1805
G1396
G1397

mm 41,5 x 45,3
7,7

A | A

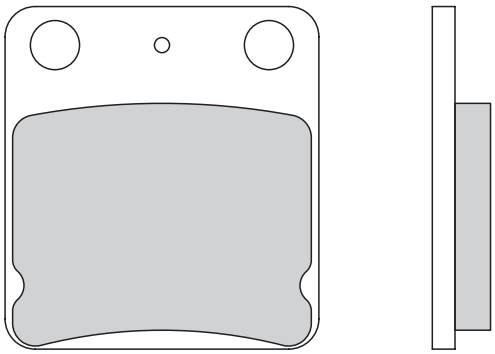

A | A

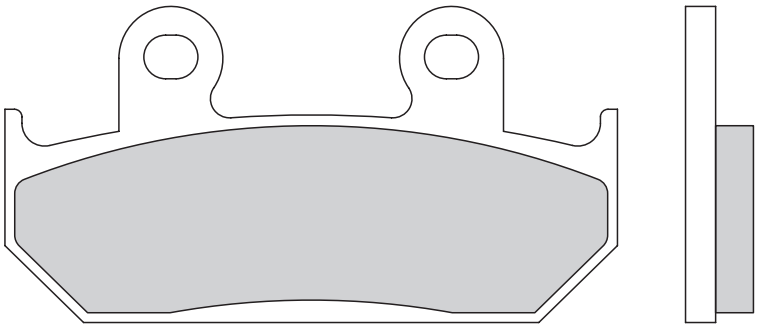

GALFER
**FD 096**
G1054
G1370

mm 81,0 x 41,8
9,0

A | A

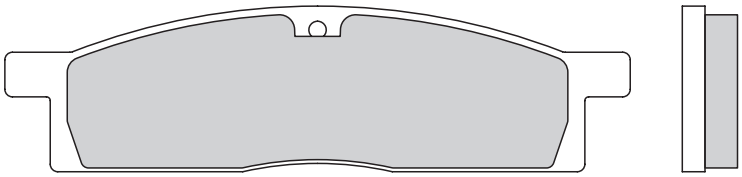

GALFER
**FD 097**
G1054
G1050
G1805

mm 82,7 x 21,9
7,3

A | A

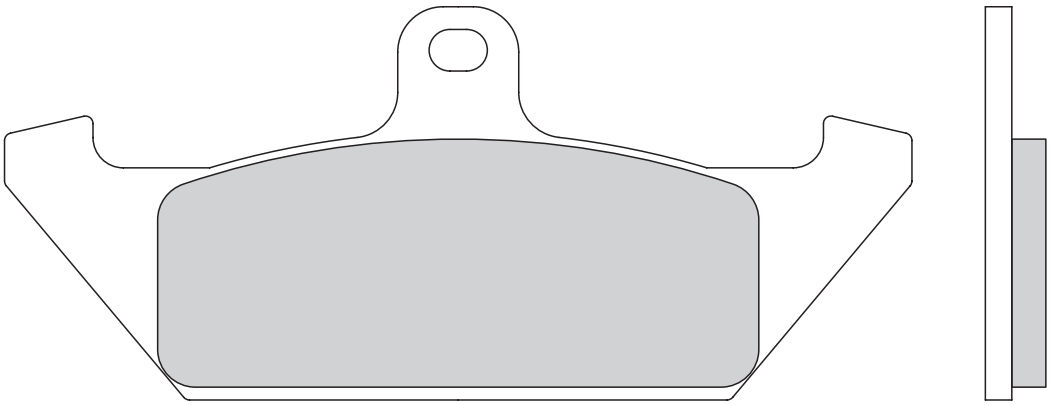

GALFER
**FD 098**
G1054

mm 120,0 x 52,0
8,0

A | A

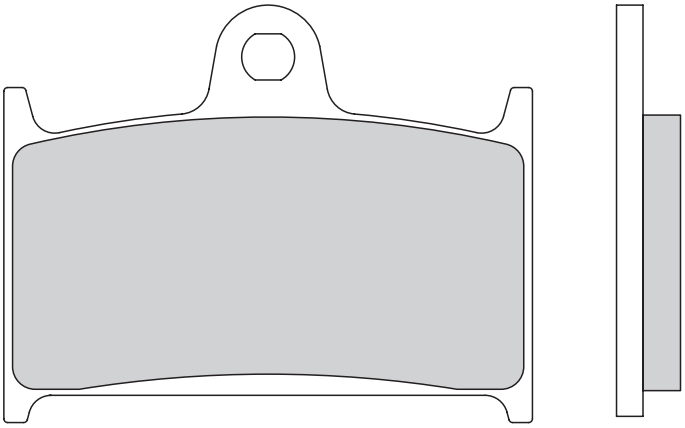

GALFER
**FD 099**
G1054
G1370
G1375

mm 69,9 x 54,4
8,5

## GALFER FD 100 G1054

mm 68,0 x 53,6

9,0

A A

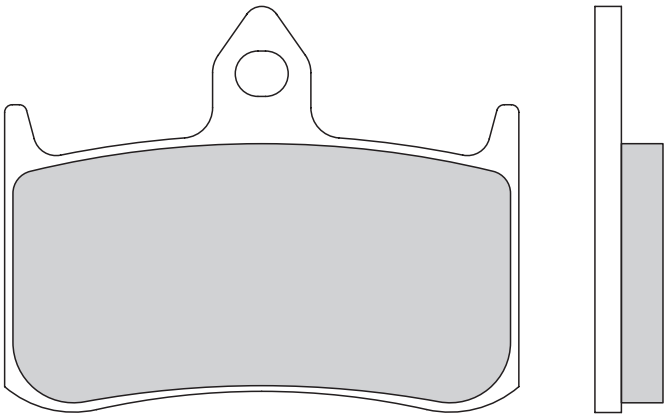

**FD148** (th. 8,5mm) can replace **FD100** (not vice versa) | **FD148** (th. 8,5mm) puede sustituir **FD100** (no al revés)

## GALFER FD 101 G1054

mm 97,5 x 58,0

10,8

A B

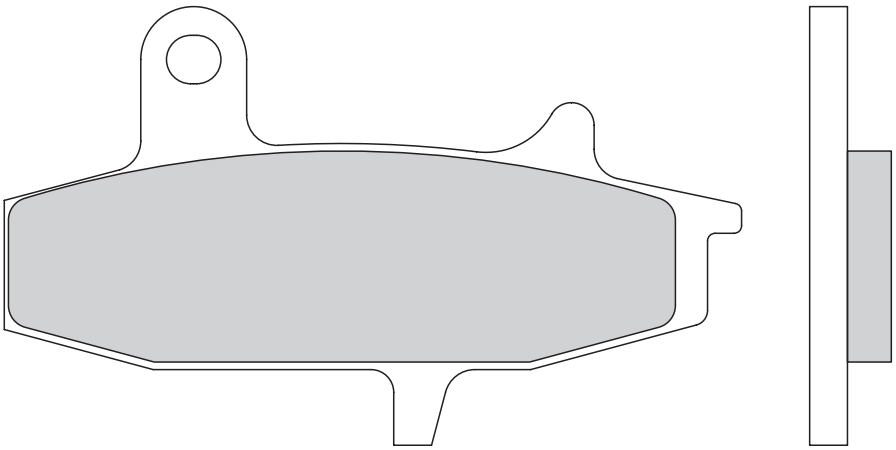

mm 117,3 x 48,0

8,5

A B

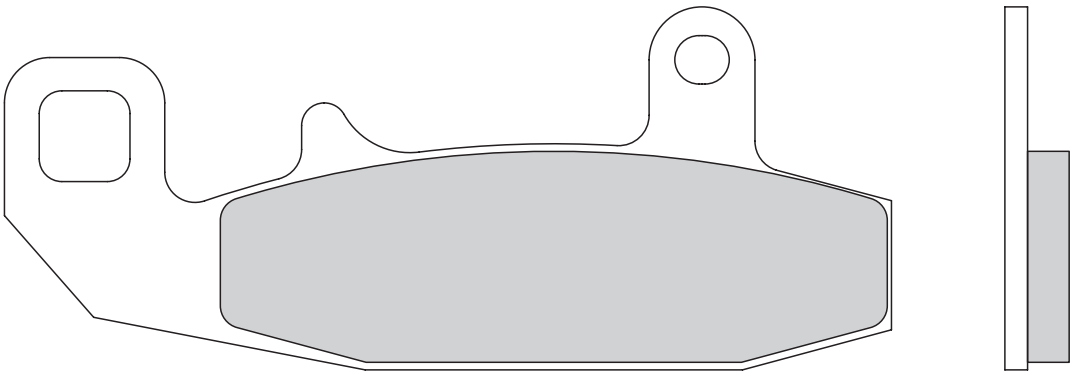

## GALFER FD 102 G1054 G1805

mm 75,0 x 40,0

6,3

A A

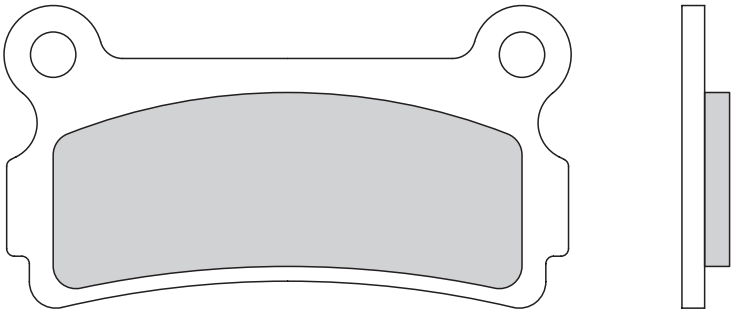

A | A1

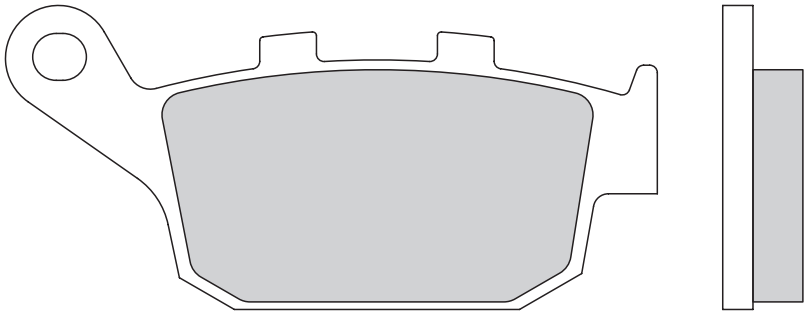

**FD457** (th. 9,0mm) can replace **FD103** (not vice versa) | **FD457** (th. 9,0mm) puede sustituir **FD103** (no al revés)

GALFER **FD 103**
G1054
G1805
G1371

mm 86,0 x 40,2
10,6

A | B

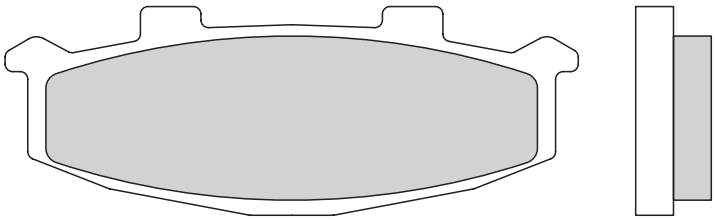

GALFER **FD 104**
G1054

mm 75,8 x 27,6
10,0

A | B

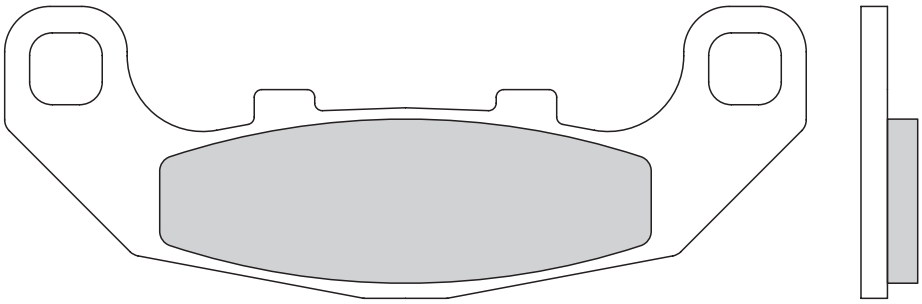

mm 106,0 x 38,6
7,5

A | A

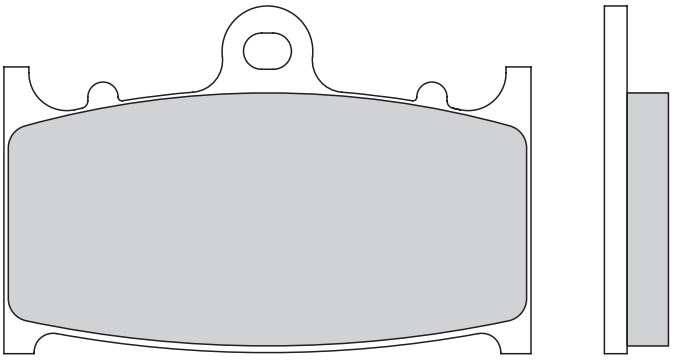

GALFER **FD 107**
G1054
G1370
G1375
G1003
G1300

mm 69,7 x 46,0
8,5

## GALFER FD 109

G1054
G1805

mm 59,0 x 58,0
8,0

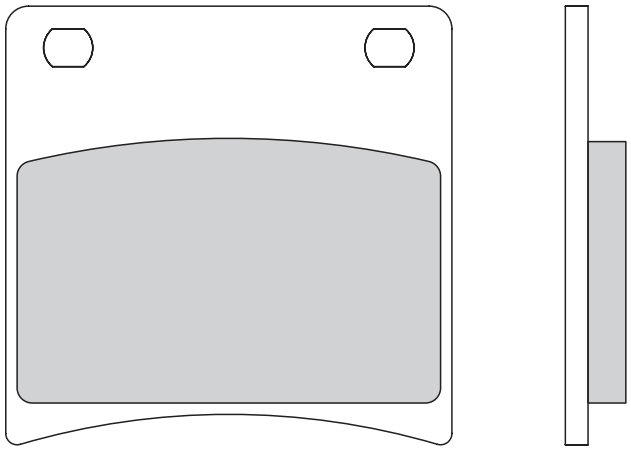

A | A

## GALFER FD 110

G1054
G1805

mm 94,2 x 31,8
10,5

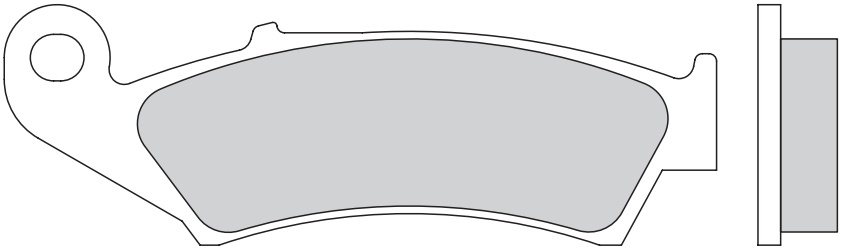

A | A[1]

## GALFER FD 111

G1054
G1805
G1371

mm 53,0 x 53,0
8,6

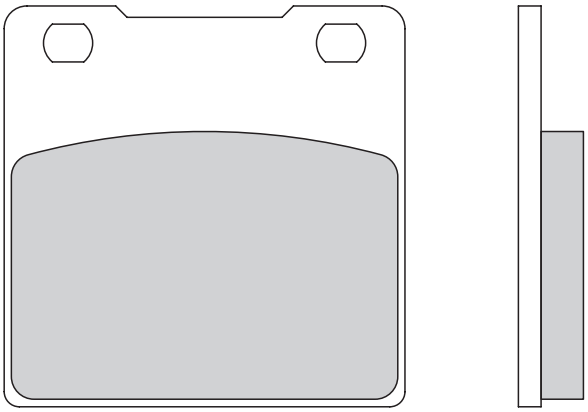

A | A

## GALFER FD 113

G1054
G1050

mm 52,0 x 36,6
8,3

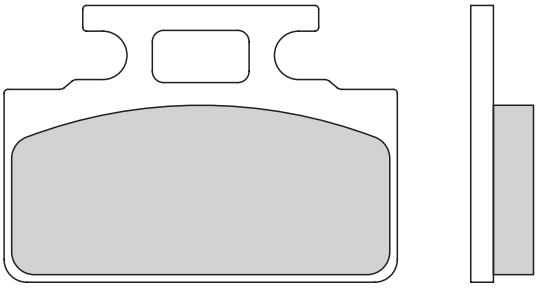

A | A



SEMI METAL → G1054 SCOOTER → G1050 TRIAL TOP → G1805 SINTERED → G1370-71 G1375 G1380-83 G1396 G1397 GP → G1003-G1300

A | A

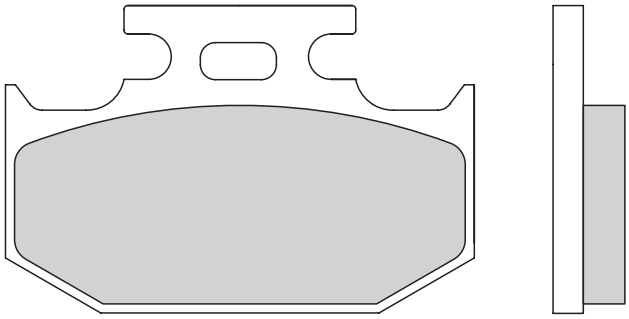

GALFER
**FD 114**
G1054
G1805
G1396

mm 62,0 x 40,6
9,5

A | A1

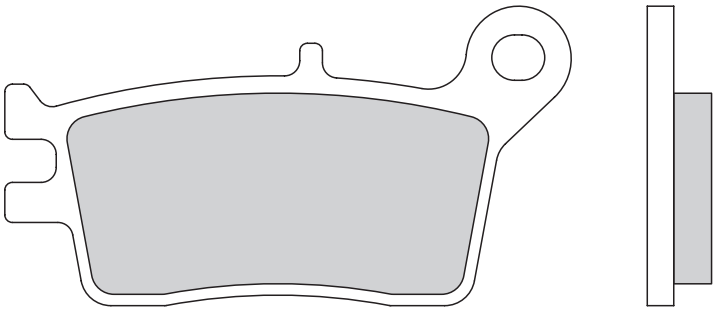

GALFER
**FD 115**
G1054

mm 74,9 x 39,6
8,5

A | B

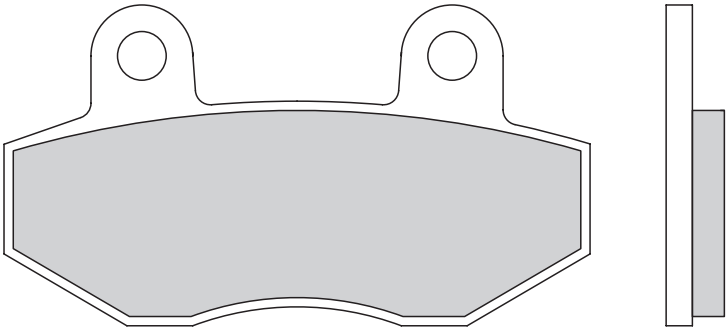

GALFER
**FD 117**
G1054
G1050
G1805
G1370
G1397

mm 77,4 x 42,3
7,7

mm 98,8 x 42,4
7,5

A | B

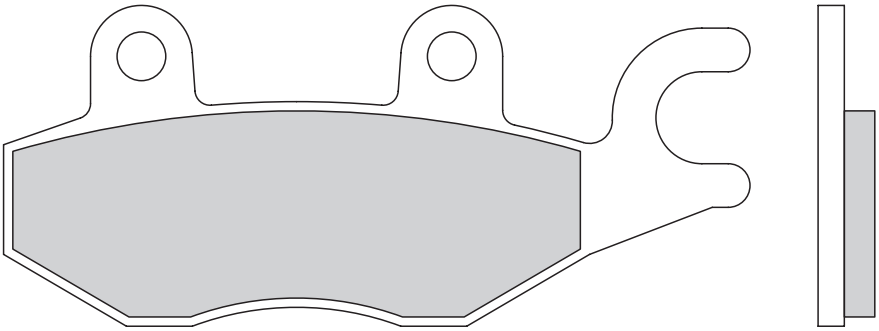

## GALFER FD 118

G1054
G1050
G1370

mm 67,4 x 50,7
7,0

A A

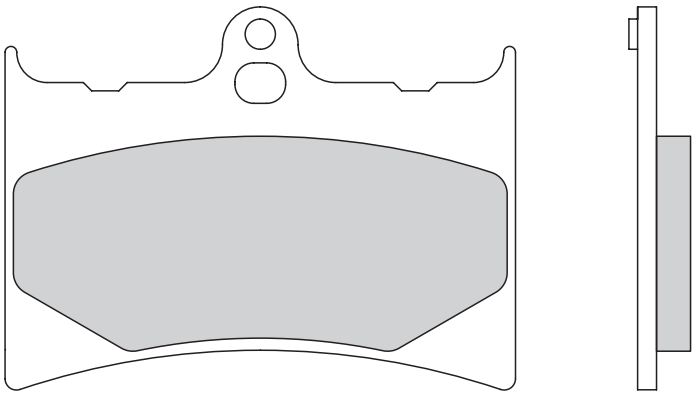

## GALFER FD 119

G1054

mm 99,6 x 52,0
8,0

A A

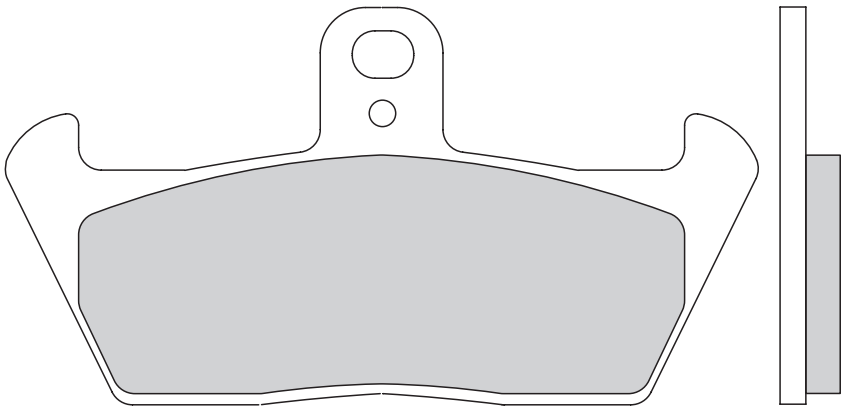

## GALFER FD 120

G1054
G1805

mm 83,0 x 47,6
9,6

mm 99,1 x 44,0
7,4

A B

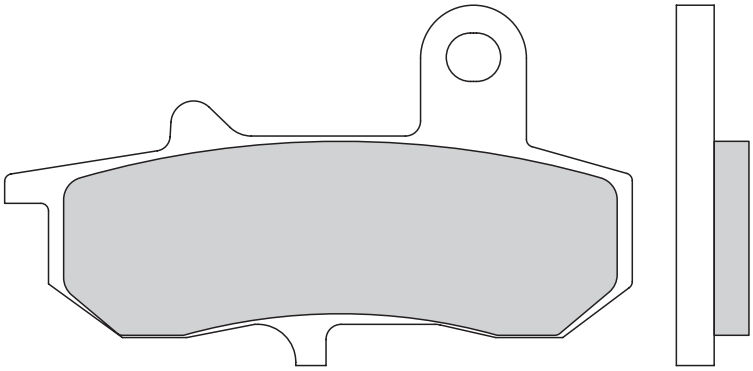

A B

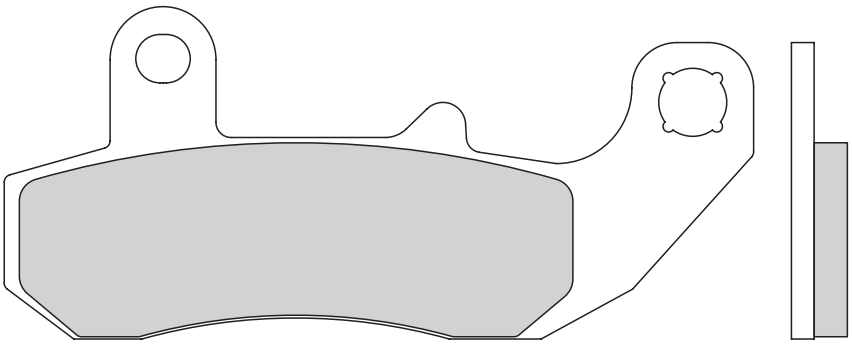



SEMI METAL → G1054 SCOOTER → G1050 TRIAL TOP → G1805 SINTERED → G1370-71 G1375 G1380-83 G1396 G1397 GP → G1003-G1300

A A

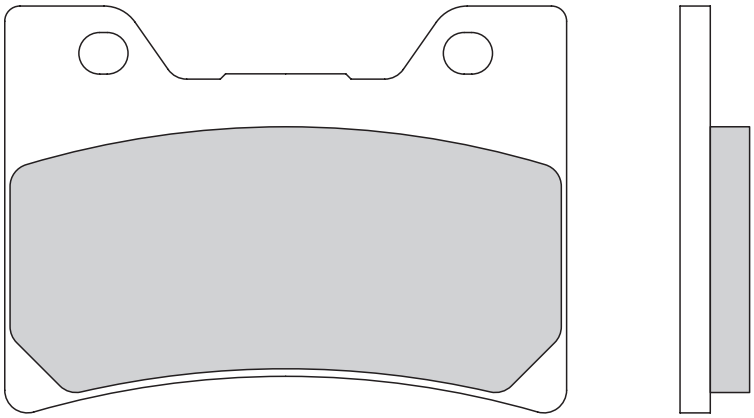

GALFER
**FD 121**
G1054
G1370

mm 74,3 x 53,8
9,2

A A

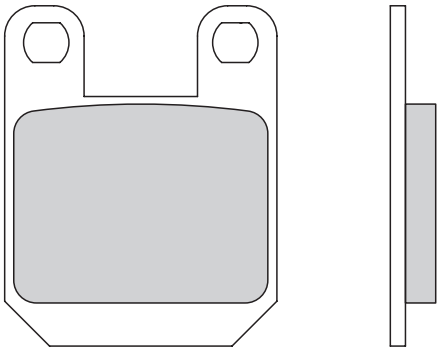

GALFER
**FD 122**
G1054
G1805

mm 36,0 x 45,0
6,0

A A

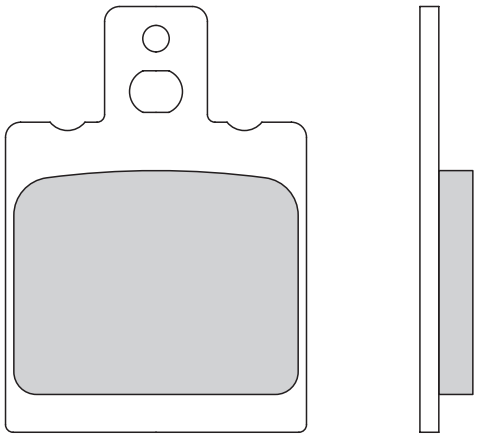

GALFER
**FD 123**
G1054
G1805

mm 39,8 x 56,3
7,0

A A

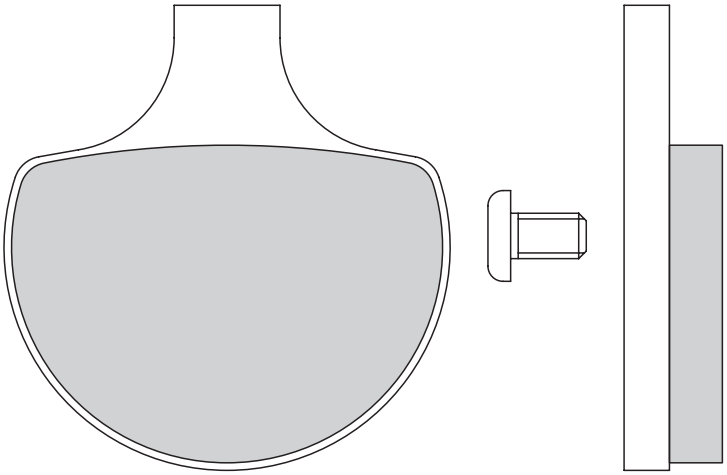

GALFER
**FD 124**
G1054

mm 59,0 x 61,5
13,0

## GALFER FD 125 G1054

mm 103,4 x 62,5

12,0

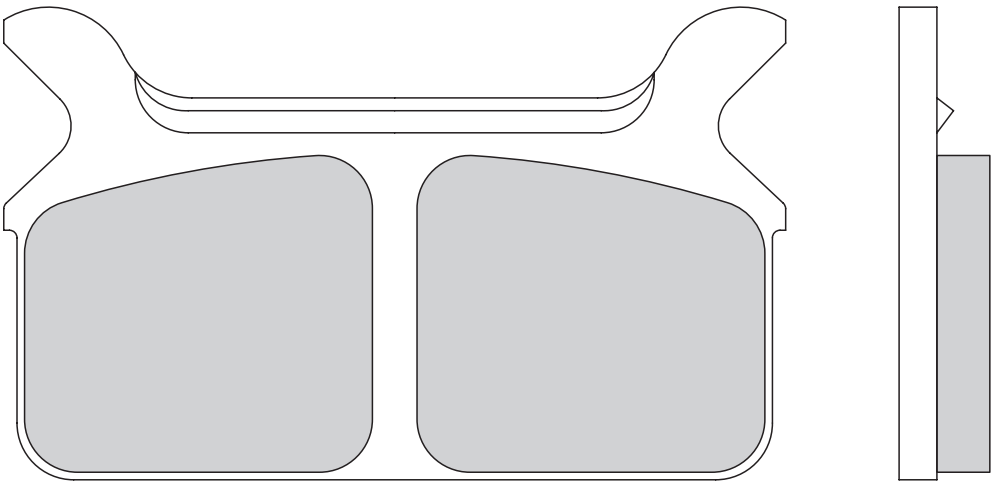

A A

## GALFER FD 126 G1054

mm 104,0 x 62,3

11,0

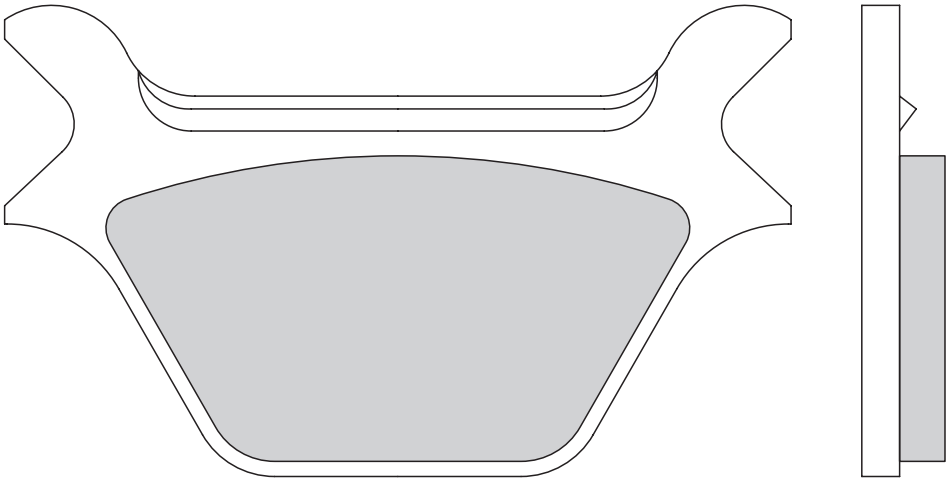

A A

## GALFER FD 127 G1054

mm 78,8 x 42,6

10,6

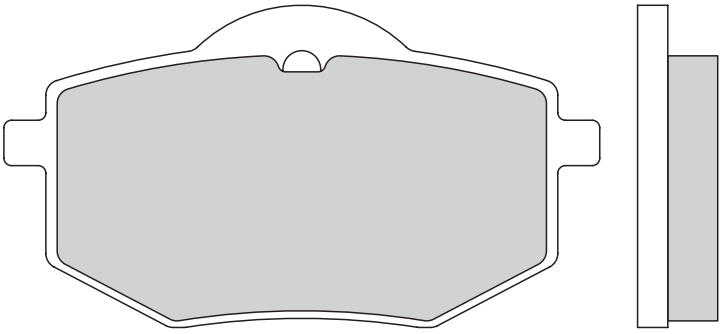

A A

## GALFER FD 128 G1054 G1805

mm 79,3 x 46,2

9,0

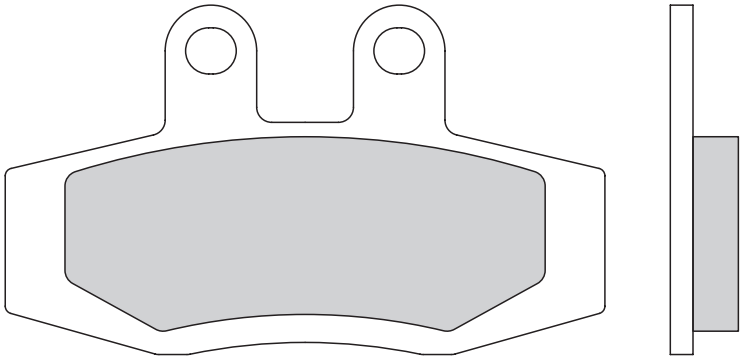

A A



SEMI METAL → G1054 SCOOTER → G1050 TRIAL TOP → G1805 SINTERED → G1370-71 G1375 G1380-83 G1396 G1397 GP → G1003-G1300

A | B

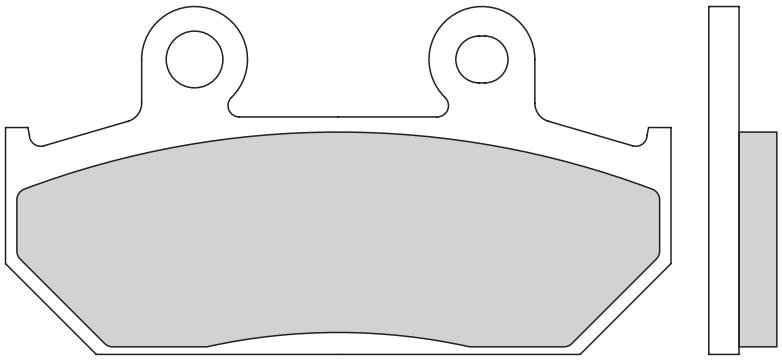

GALFER
**FD 129**
G1054
G1050
G1805

mm: 88,0 x 46,0
9,0

A | B

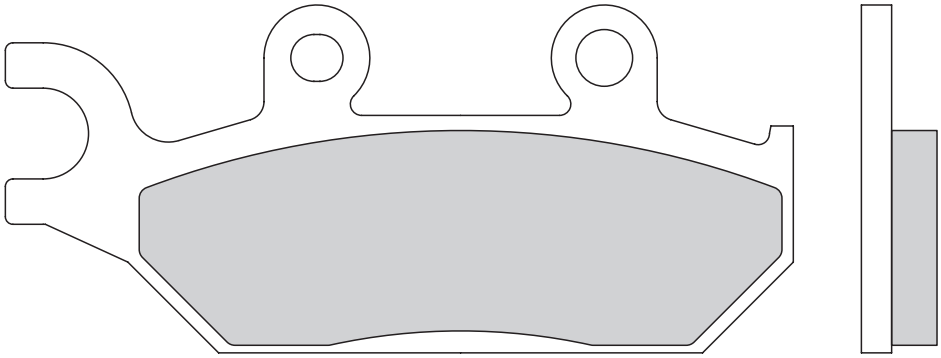

mm: 104,2 x 46,0
10,0

A | A

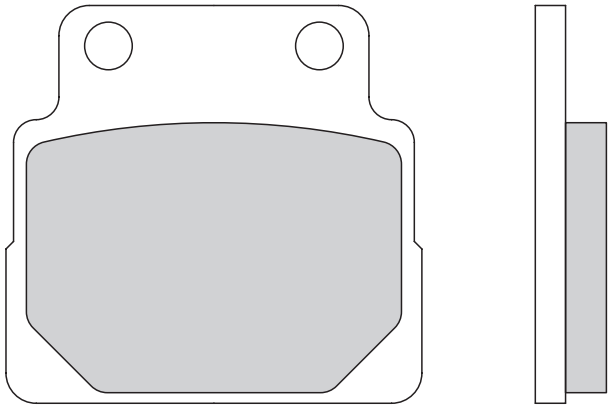

GALFER
**FD 130**
G1054

mm: 55,0 x 52,6
9,4

A | A

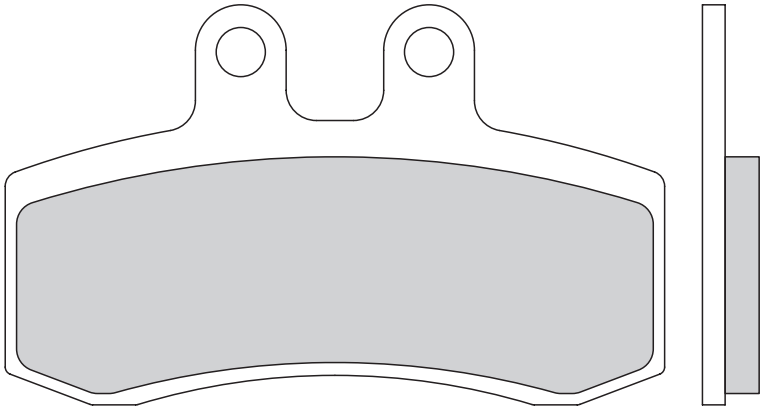

GALFER
**FD 132**
G1054

mm: 87,2 x 52,9
7,5

## GALFER FD 133

G1054
G1050
G1805
G1380

mm 76,8 x 41,8

7,4

A | A

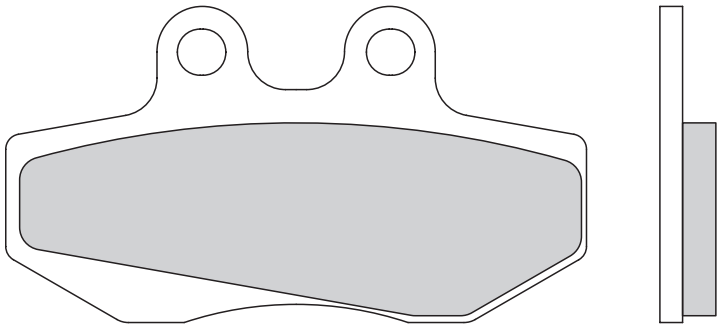

## GALFER FD 134

G1054
G1371

mm 86,0 x 36,7

9,0

A | A[1]

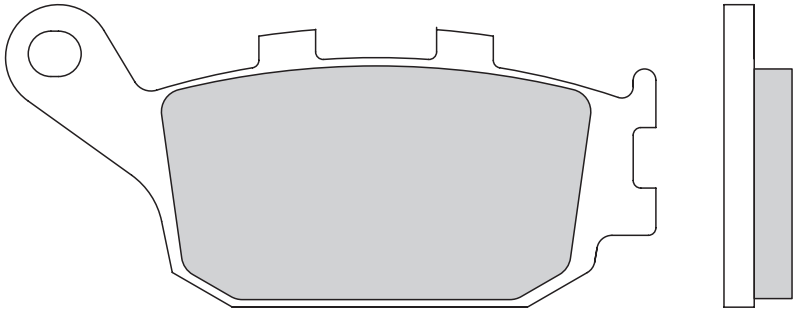

## GALFER FD 135

G1054
G1050

mm 56,3 x 34,7

10,5

mm 85,0 x 42,1

7,8

A | B

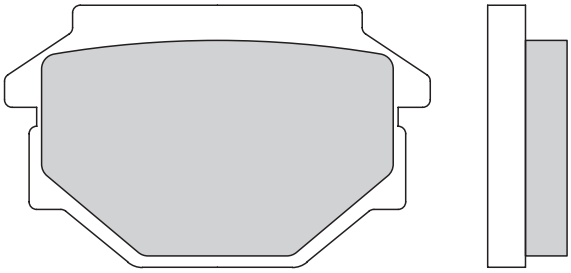

A | B

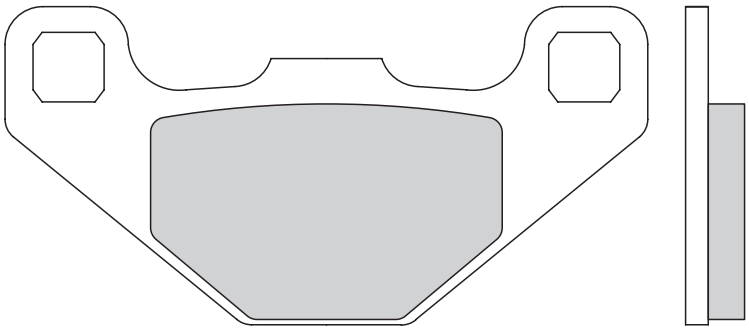



SEMI METAL → G1054 SCOOTER → G1050 TRIAL TOP → G1805 SINTERED → G1370-71 G1375 G1380-83 G1396 G1397 GP → G1003-G1300

A | A

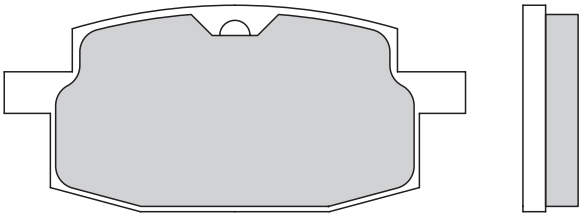

**GALFER FD 136**
G1054
G1050
61,0 x 27,3 mm
7,3

A | A

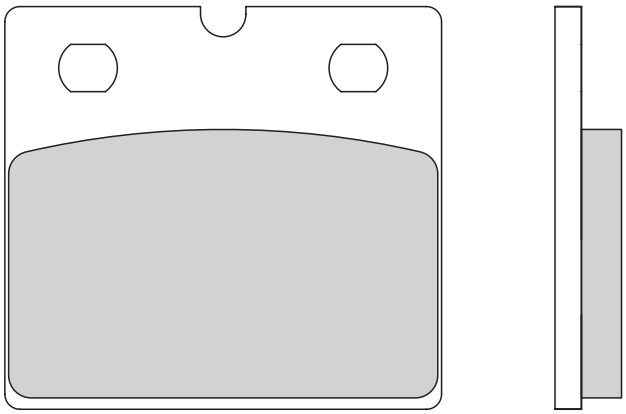

**GALFER FD 137**
G1054
57,7 x 53,3 mm
8,8

A | A¹

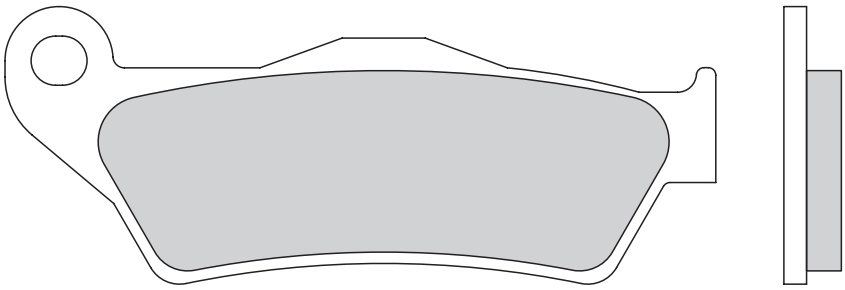

**GALFER FD 138**
G1054
G1050
G1805
G13870-0
G1396
94,0 x 36,7 mm
7,6

A | A¹

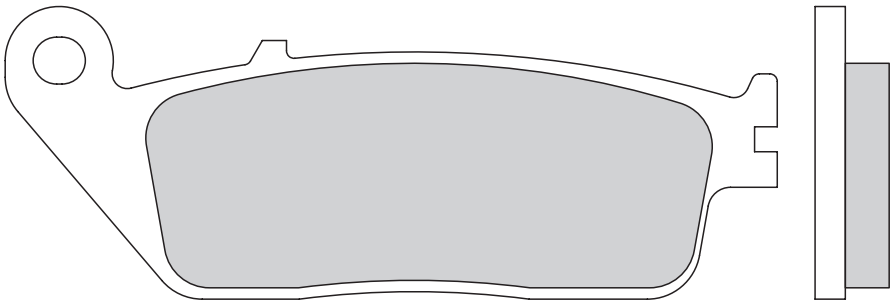

**GALFER FD 140**
G1054
G1050
G1370
102,1 x 38,7 mm
9,8

**FD266** (th. 8,3mm) can replace **FD140** (not vice versa) | **FD266** (th. 8,3mm) puede sustituir **FD140** (no al revés)

## GALFER FD 141 G1054

mm 58,9 x 43,6

7,9

A | A

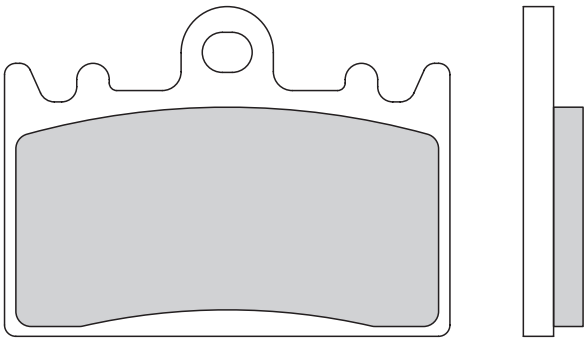

## GALFER FD 142 G1054 G1050 G1370 G1380

mm 102,2 x 40,0

10,0

A | A

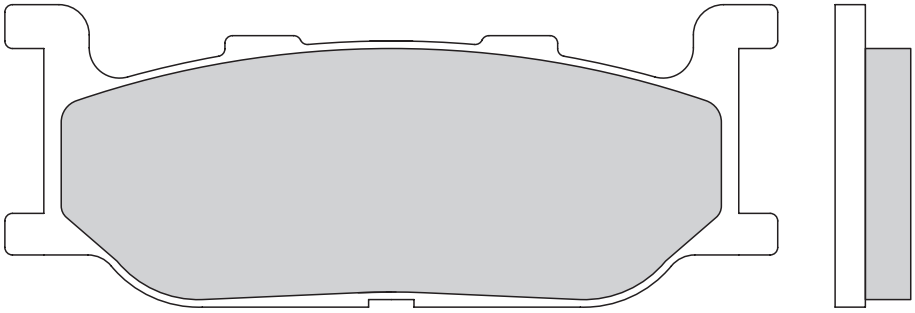

## GALFER FD 143 G1054 G1370

mm 74,3 x 53,7

9,2

A | A

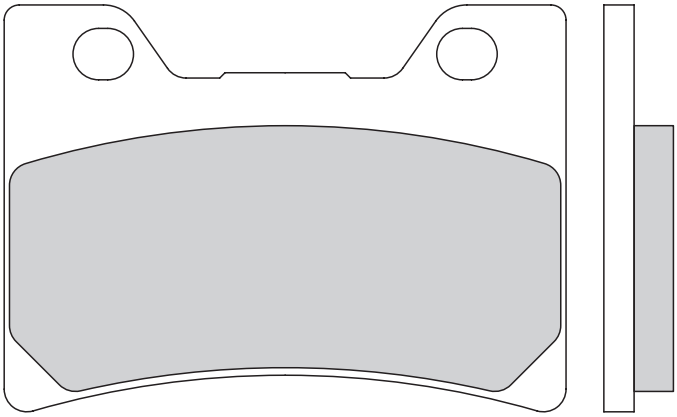

## GALFER FD 144 G1054 G1050

mm 75,2 x 36,1

8,9

A | A[1]

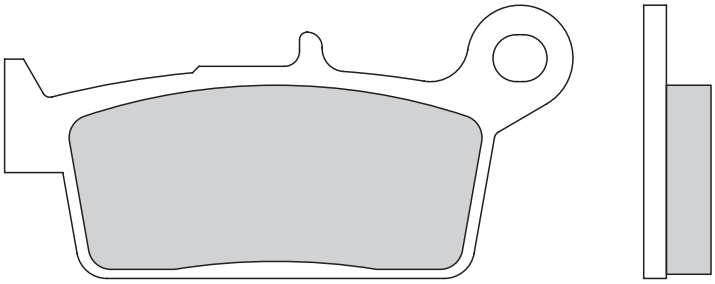

**FD147** (th. 7,0mm) can replace **FD144** (not vice versa) | **FD147** (th. 7,0mm) puede sustituir **FD144** (no al revés)

A | B

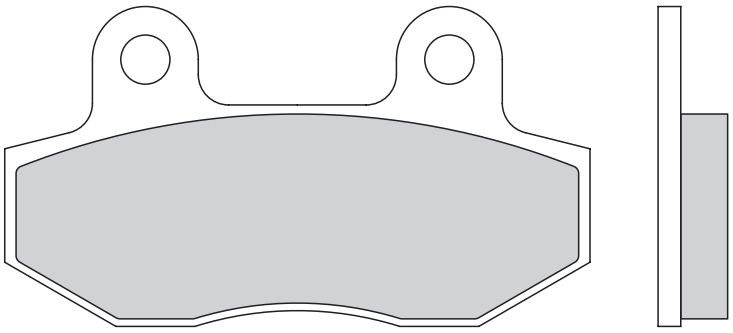

GALFER
**FD 145**
G1054
G1050
G1380

mm 77,4 x 42,3
9,2

A | B

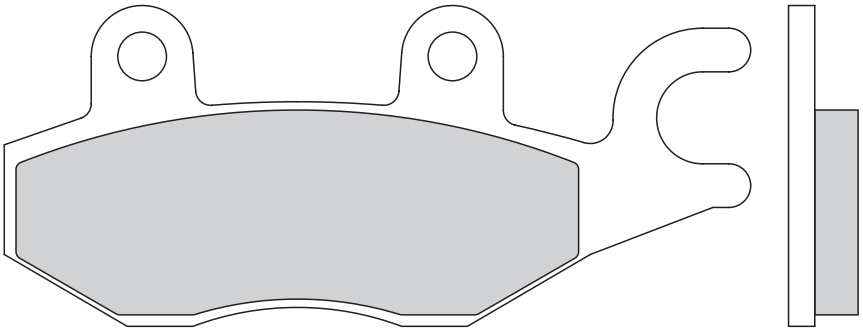

mm 98,8 x 42,3
9,2

**FD117** (th. 7,5mm) can replace **FD145** (not vice versa) | **FD117** (th. 7,5mm) puede sustituir **FD145** (no al revés)

A | A[1]

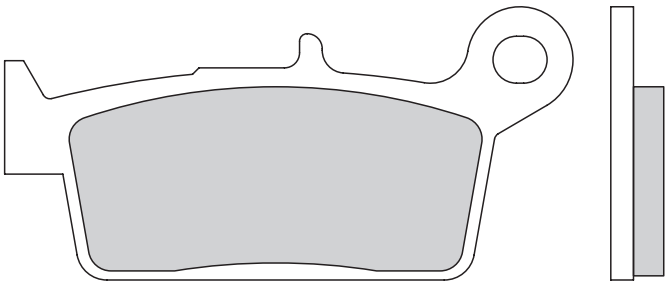

GALFER
**FD 147**
G1054
G1050

mm 75,2 x 36,1
7,0

A | A

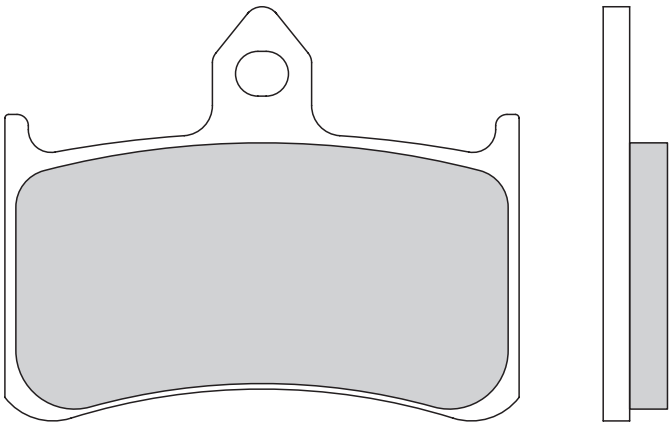

GALFER
**FD 148**
G1054
G1370
G1375

mm 68,0 x 53,6
8,5

## GALFER FD 149

G1054
G1050

mm 40,9 x 43,0
7,7

A A

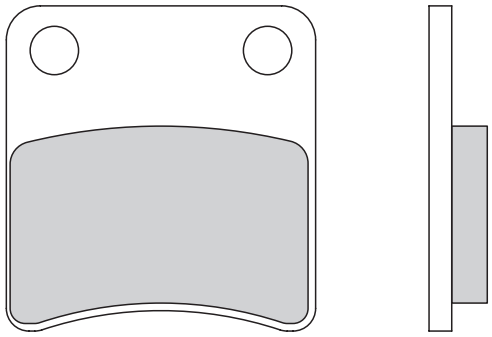

## GALFER FD 151

G1054
G1050
G1805

mm 55,5 x 46,2
7,0

A A

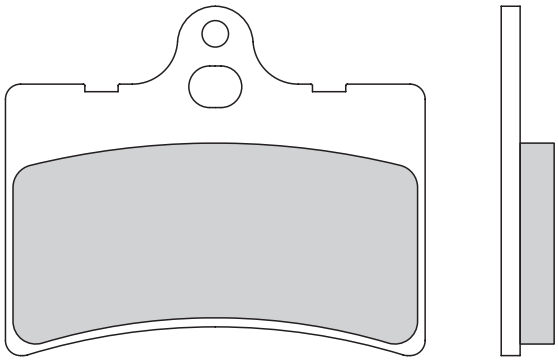

## GALFER FD 152

G1054
G1050

mm 31,8 x 51,2
5,5

A A

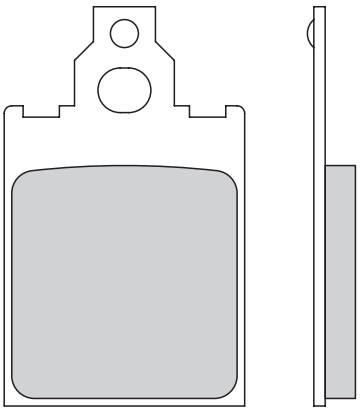

## GALFER FD 153

G1054
G1050
G1380

mm 39,7 x 49,5
6,5

A A

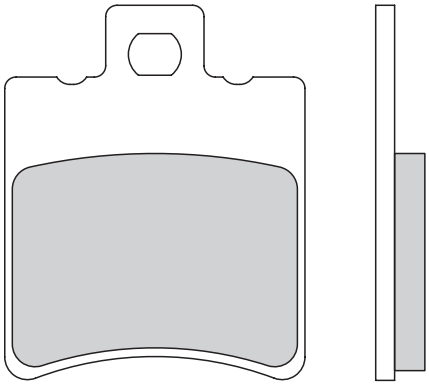

A | A

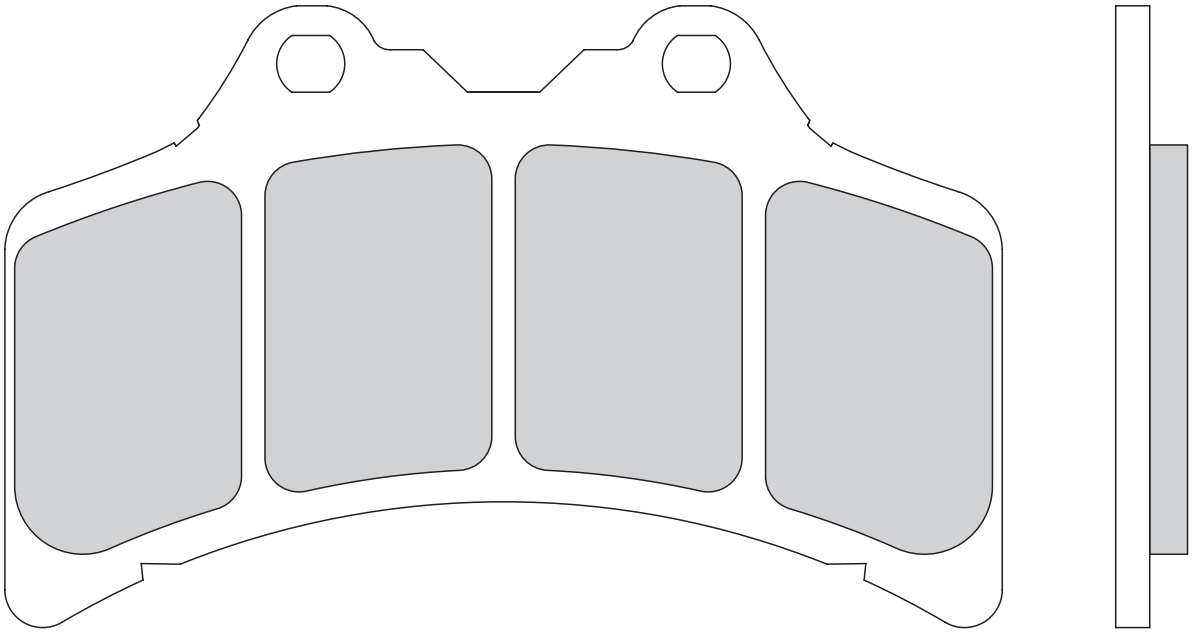

GALFER
**FD 154**
G1054

mm: 131,9 x 82,2
9,5

A | A¹

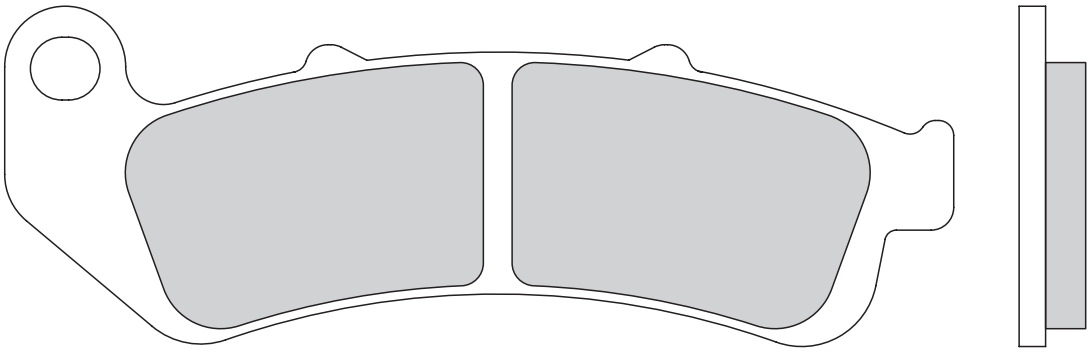

GALFER
**FD 155**
G1054

mm: 125,5 x 45,0
8,8

A | A

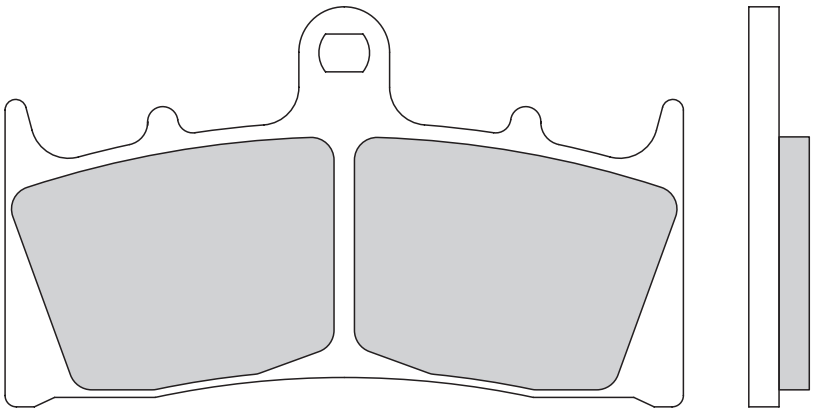

GALFER
**FD 156**
G1054
G1370
G1375
G1003
G1300

mm: 90,0 x 55,7
8,0

## GALFER FD 157 G1054

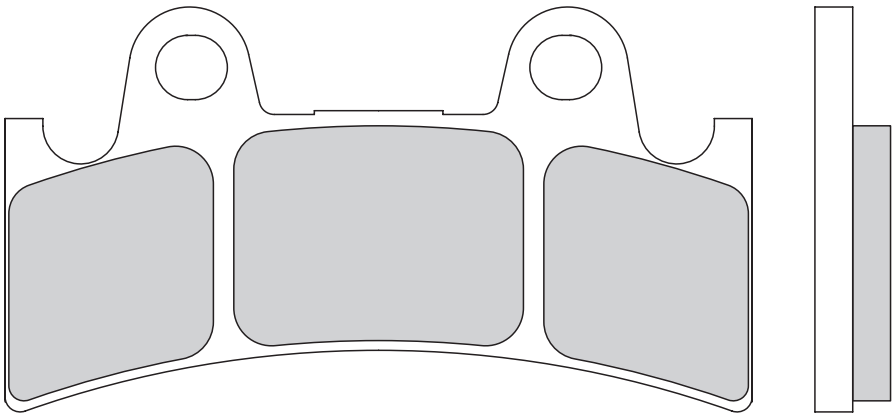

A | A

mm 98,8 x 53,5

10,0

## GALFER FD 158 G1054

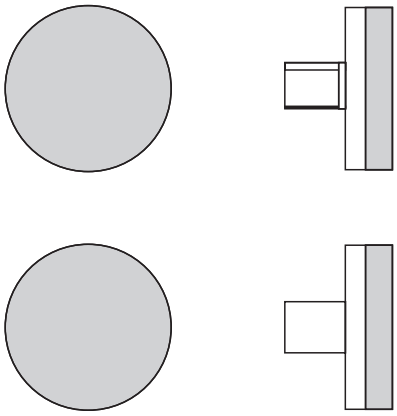

A | B

mm 22,1 x 22,1

5,9

## GALFER FD 159 G1054 G1805

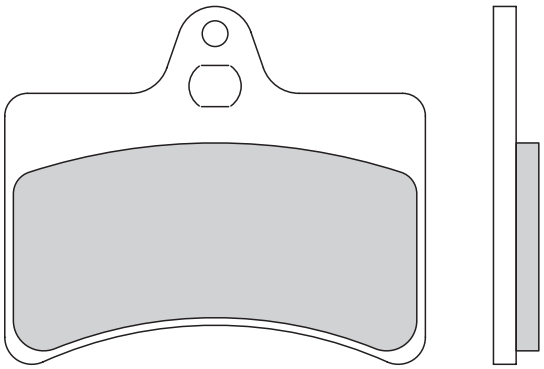

A | A

mm 55,6 x 47,3

6,0

## GALFER FD 160 G1054

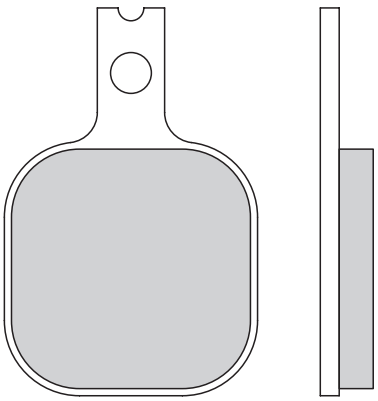

A | A
6x

mm 33,5 x 51,3

7,0



SEMI METAL → G1054 SCOOTER → G1050 TRIAL TOP → G1805 SINTERED → G1370-71 G1375 G1380-83 G1396 G1397 GP → G1003-G1300

A A
6x

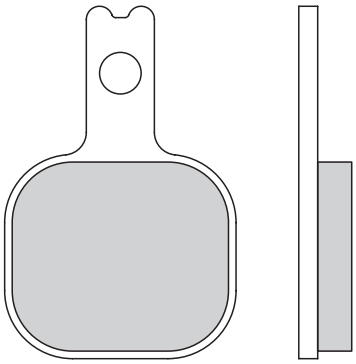

GALFER
FD
161
G1054

mm 30,6 x 46,6
7,0

A B

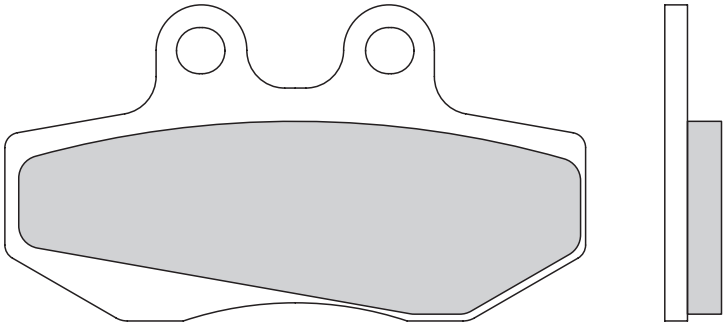

GALFER
FD
162
G1054
G1380

mm 76,8 x 41,8
7,5

A B

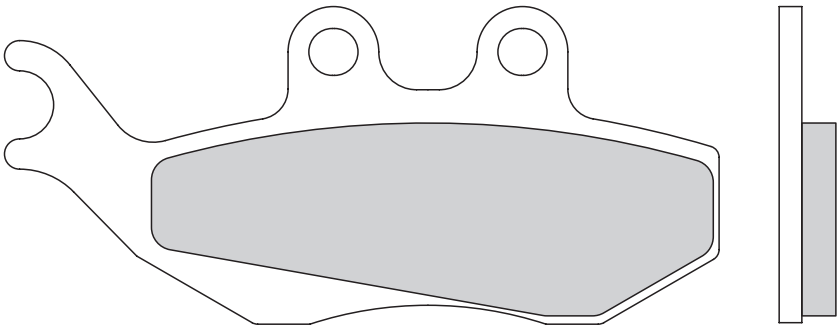

mm 94,5 x 42,0
7,5

A A

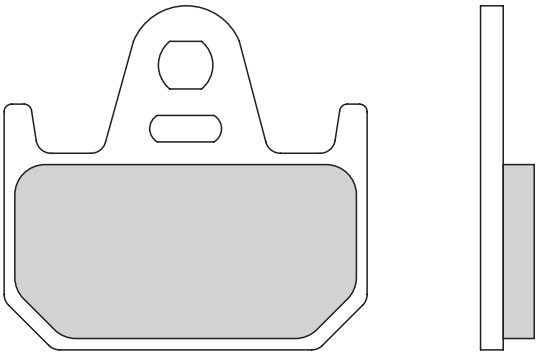

GALFER
FD
163
G1054
G1805

mm 48,0 x 45,5
7,1

## GALFER FD 164

G1054
G1805
G1396

mm 94,2 x 33,7
6,8

A | A1

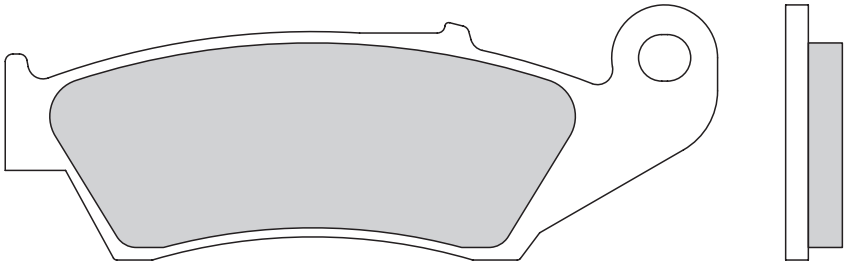

## GALFER FD 165

G1054
G1805
G1371
G1396

mm 78,0 x 40,8
9,0

A | A1

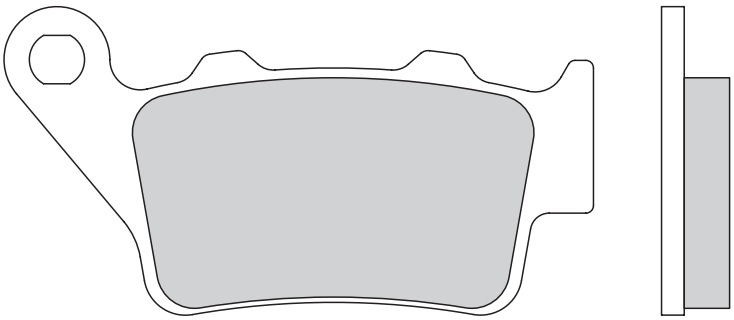

## GALFER FD 166

G1054
G1050

mm 58,9 x 44,5
9,0

A | A

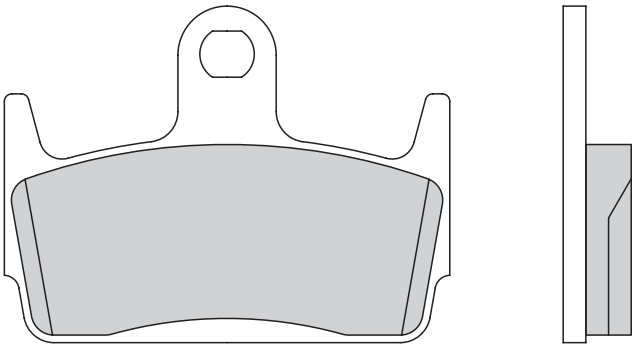

## GALFER FD 167

G1054
G1371

mm 68,2 x 53,1
9,8

A | B

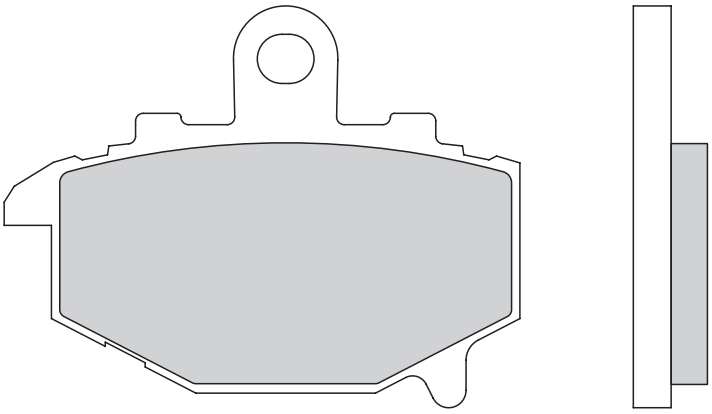

A B

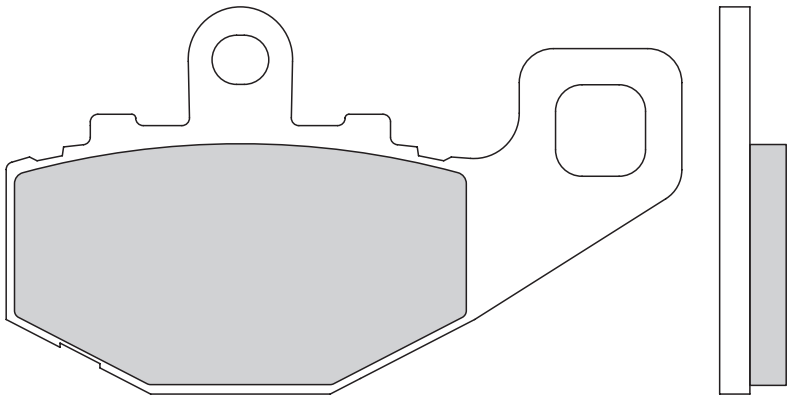

mm 89,4 x 51,2

8,8

A A

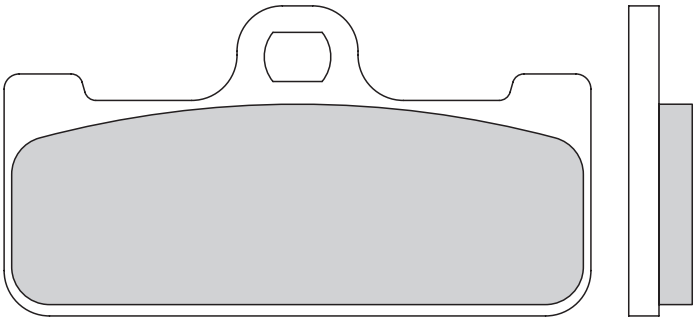

GALFER FD 168

G1054
G1375
G1003
G1300

mm 77,4 x 42,8

8,4

A A

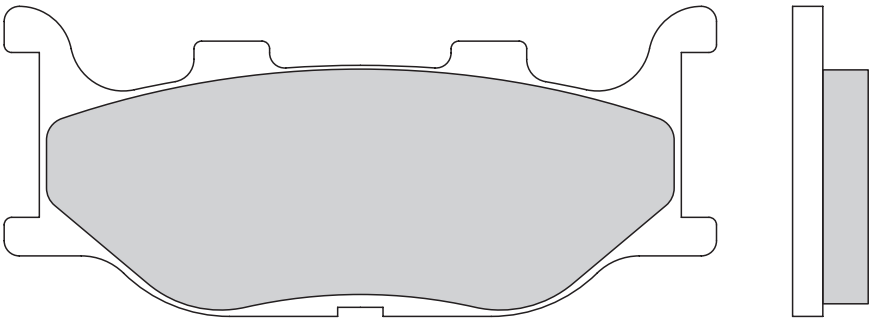

GALFER FD 169

G1054
G1050
G1370
G1375
G1380

mm 94,2 x 41,0

10,0

A A

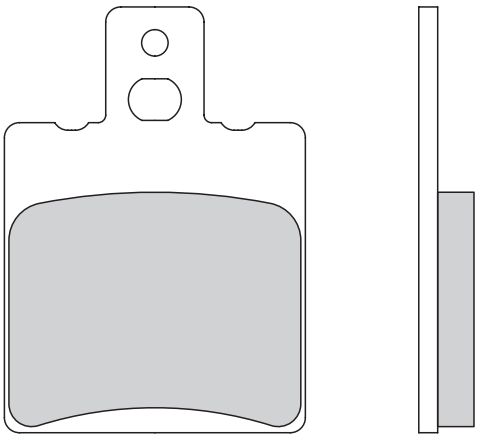

GALFER FD 170

G1054
G1050
G1805

mm 39,8 x 56,3

7,3

## GALFER FD 171

G1054
G1050

mm 39,8 x 54,0
6,4

A | A

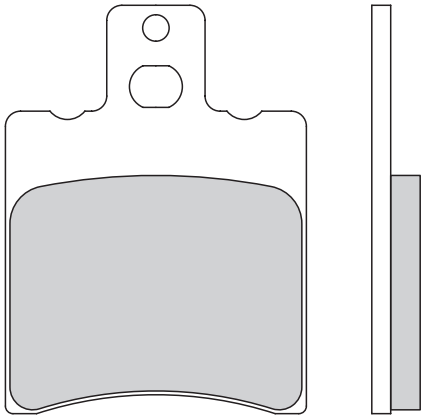

## GALFER FD 172

G1054
G1370

mm 108,7 x 39,8
7,5

A | A[1]

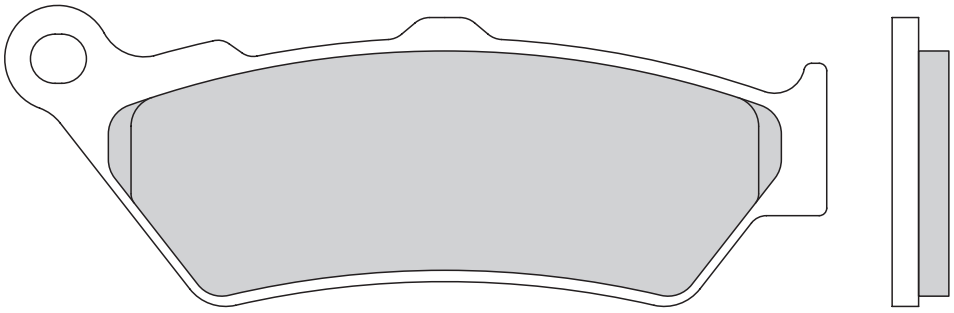

## GALFER FD 174

G1054
G1370
G1375
G1300

mm 109,0 x 44,0
8,5

mm 131,9 x 37,2
8,4

A | B

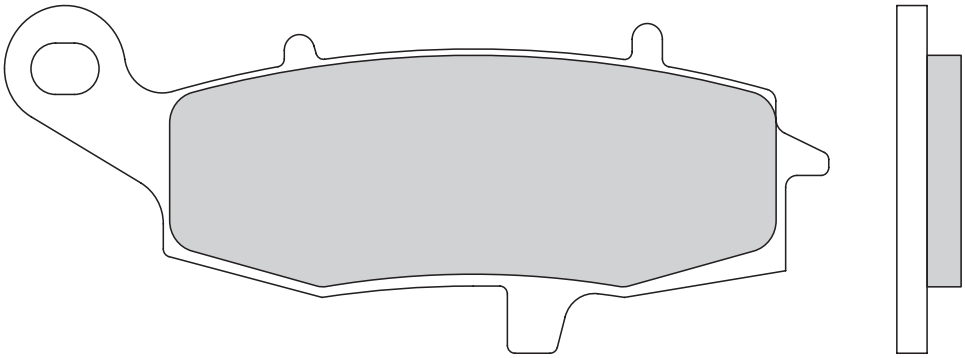

A | B

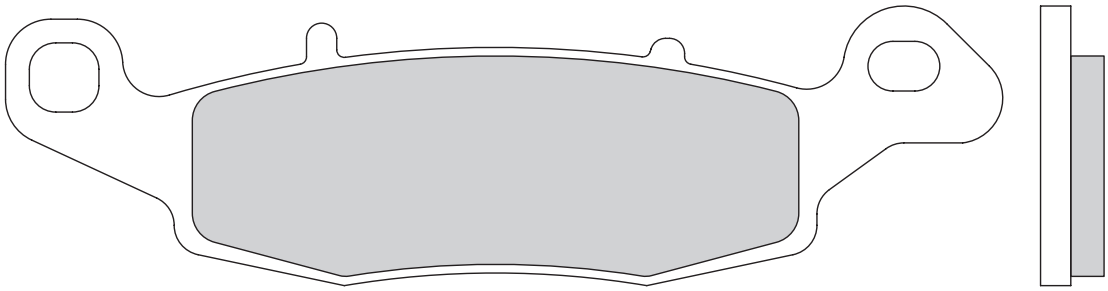

A | A

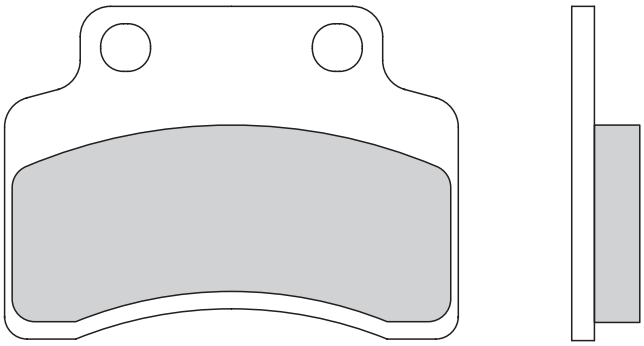

GALFER
**FD 175**
G1054
G1050

mm 60,0 x 44,0
9,0

A | A

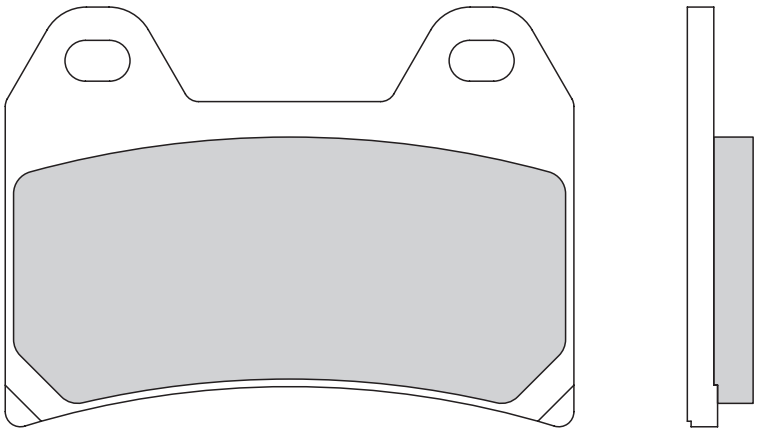

GALFER
**FD 176**
G1054
G1370
G1375
G1300

mm 75,0 x 55,5
8,7

A | B

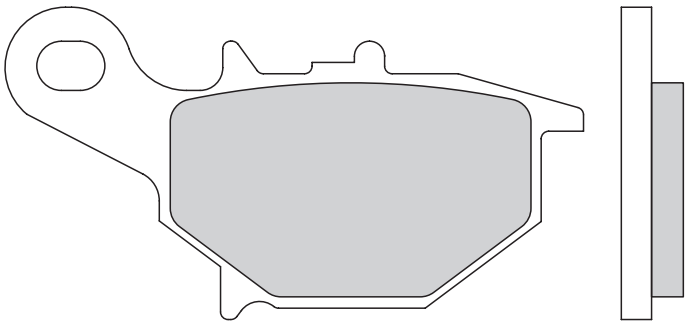

GALFER
**FD 177**
G1054
G1050

mm 76,5 x 41,3
8,2

A | B

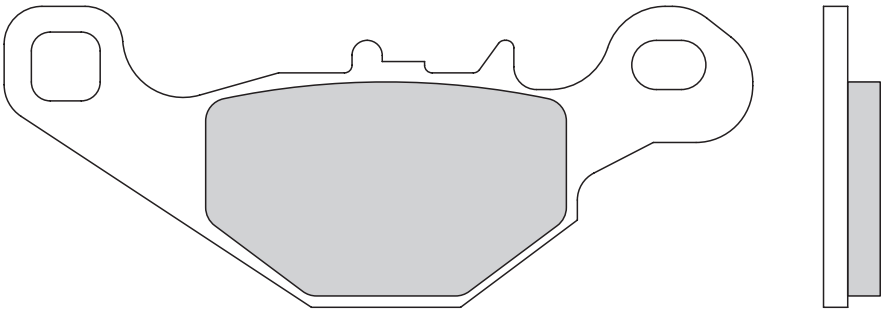

mm 99,0 x 39,8
7,5

## GALFER FD 178

G1054
G1370
G1380
G1375
G1003-G1300

mm 69,0 x 50,6
8,8

A A

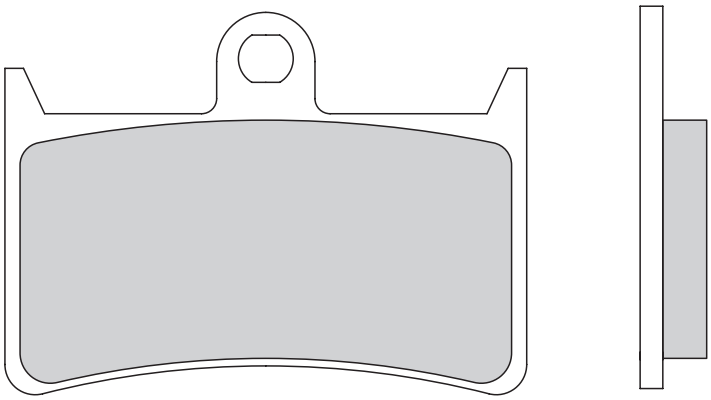

**FD068** (th. 8,2mm) replace **FD178** in **G1003** compound (not vice versa) | **FD068** (th. 8,2mm) sustituye a **FD178** en compuesto **G1003** (no al revés)

## GALFER FD 179

G1054
G1370
G1375

mm 109,0 x 44,0
8,4

mm 131,9 x 37,2
8,4

A B

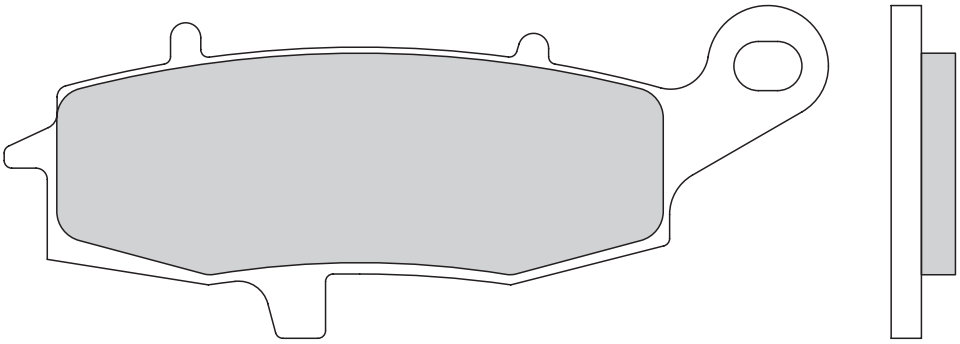

A B

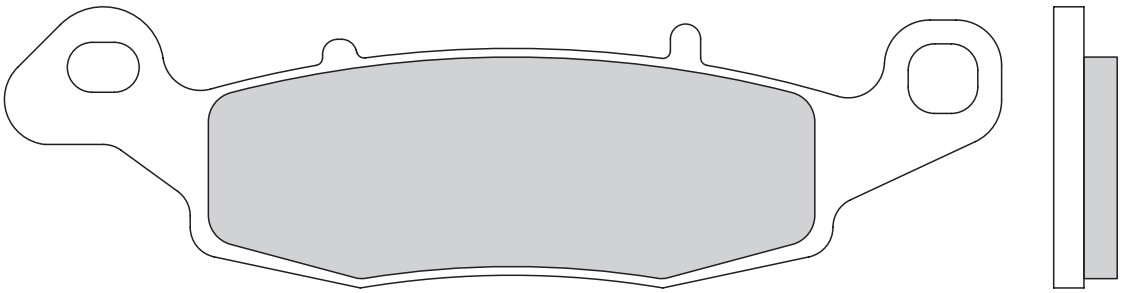

## GALFER FD 181

G1054
G1805

mm 35,6 x 29,0
8,3

A A

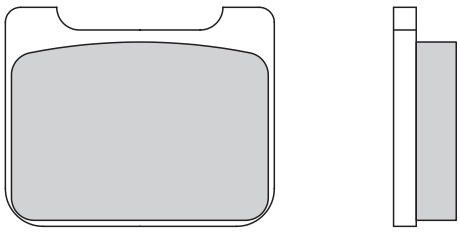

A | B

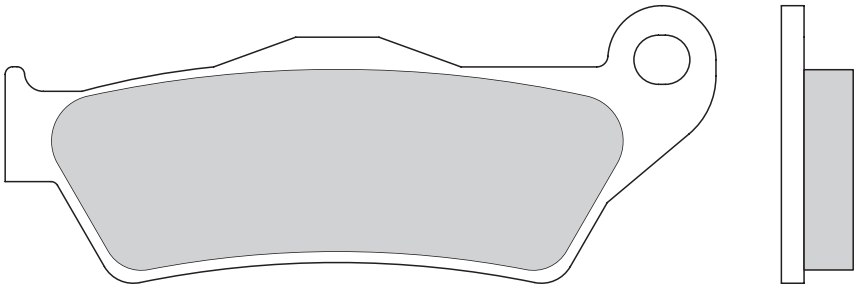

A | B

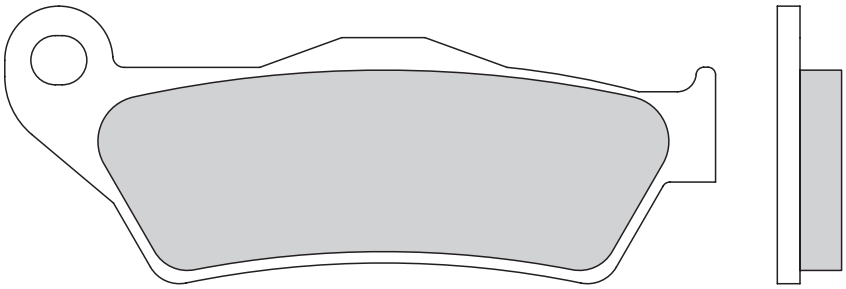

GALFER
**FD 186**
G1054
G1371

| | |
|---|---|
| mm | 94,0 x 36,7 |
| | 10,1 |
| mm | 94,0 x 36,7 |
| | 8,5 |

**FD138** (th. 7,6mm) can replace **FD186** (not vice versa) | **FD138** (th. 7,6mm) puede sustituir **FD186** (no al revés)

A | B

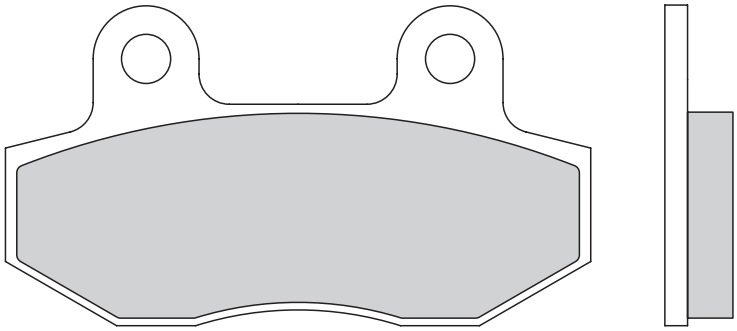

A | B

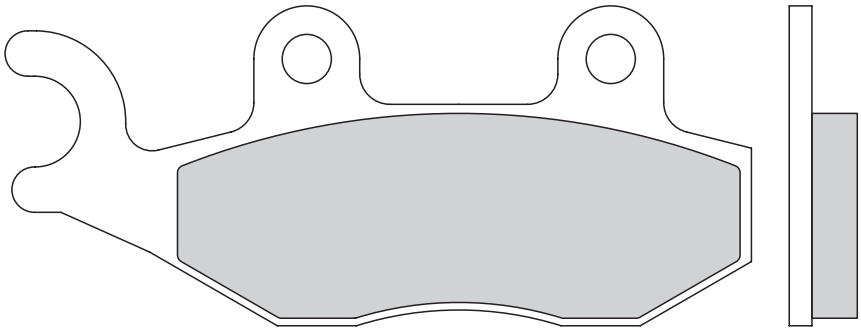

GALFER
**FD 187**
G1054
G1050
G1380

| | |
|---|---|
| mm | 77,4 x 42,3 |
| | 9,0 |
| mm | 98,8 x 42,3 |
| | 9,0 |

FD**086** (th. 7,5mm) can replace **FD187** (not vice versa) | **FD086** (th. 7,5mm) puede sustituir **FD187** (no al revés)

## GALFER FD 188

G1054
G1050
G1380

mm 70,2 x 41,1
8,0

mm 85,1 x 44,3
8,0

A B

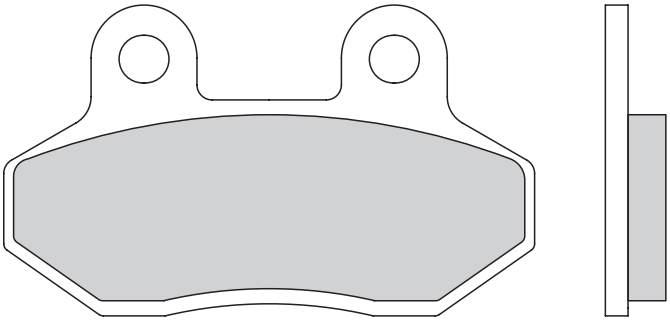

A B

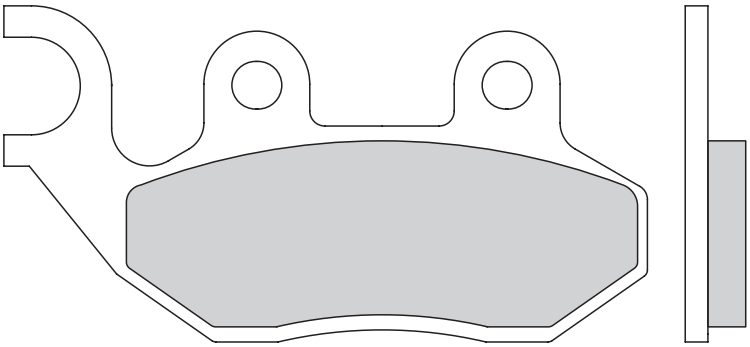

## GALFER FD 189

G1054

mm 52,6 x 56,2
8,6

A A

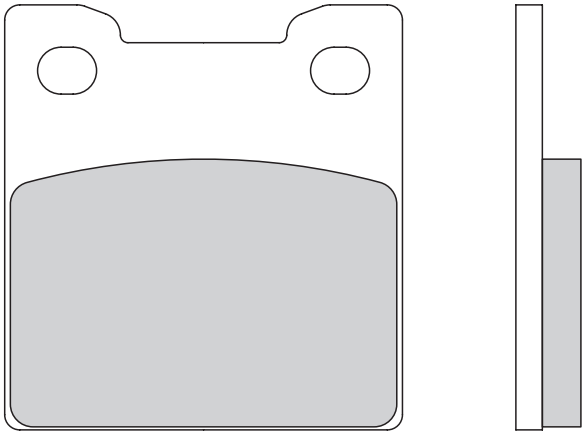

## GALFER FD 190

G1054

mm 39,8 x 56,3
9,3

A A

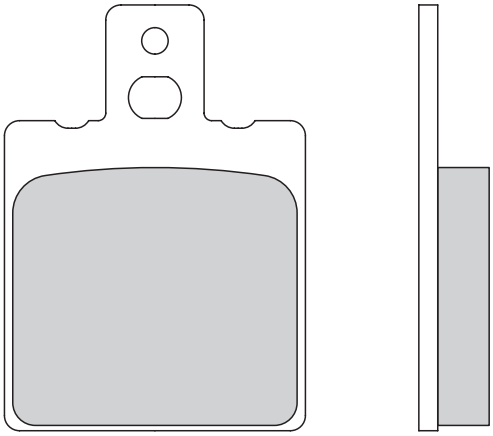

**FD012** (th. 7,0mm) can replace **FD190** (not vice versa) | **FD012** (th. 7,0mm) puede sustituir **FD190** (no al revés)

A | A

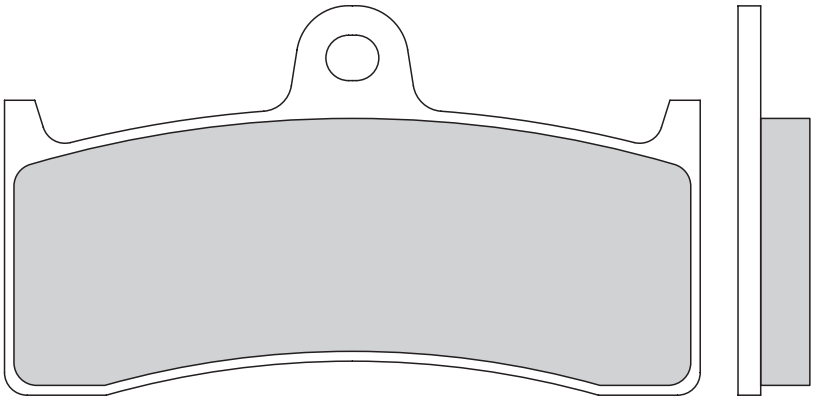

**FD384** (th. 8,0mm) can replace **FD193** (not vice versa) | **FD384** (th. 8,0mm) puede sustituir **FD193** (no al revés)

GALFER **FD 193**
G1054
G1375

mm 92,0 x 51,5
9,5

A | A

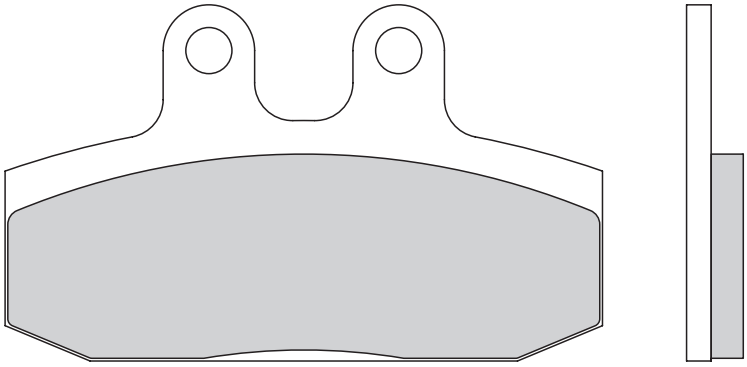

GALFER **FD 195**
G1054
G1050

mm 79,0 x 47,1
7,5

A | A

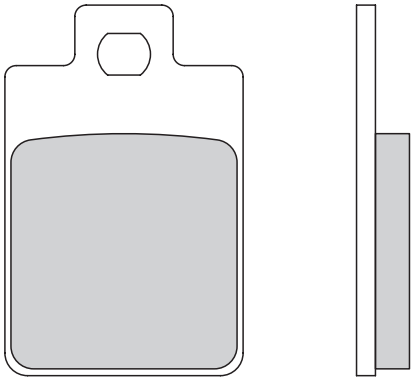

GALFER **FD 197**
G1054

mm 31,5 x 49,0
7,0

A | A

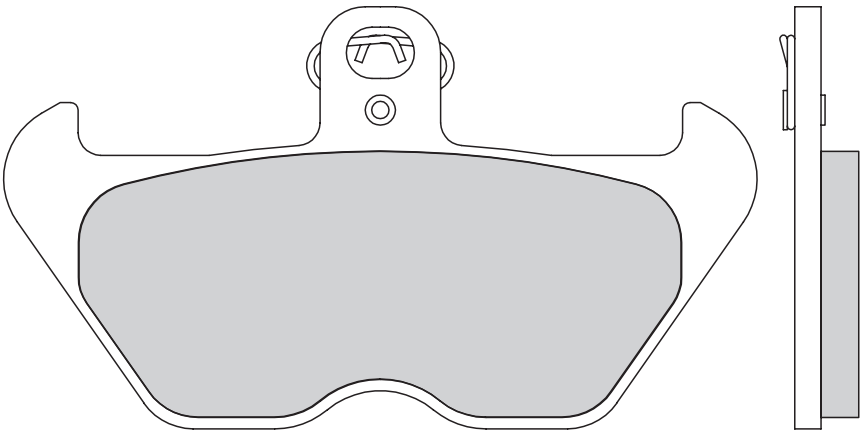

GALFER **FD 198**
G1054
G1370

mm 100,0 x 56,0
8,5

## GALFER FD 200

G1054
G1050
G1380

mm 35,6 x 49,0
7,0

A | A

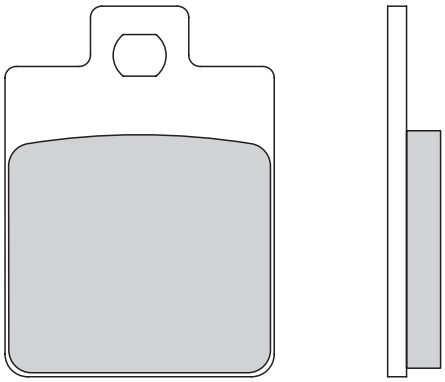

## GALFER FD 204

G1054
G1396

mm 94,1 x 35,7
7,4

A | B

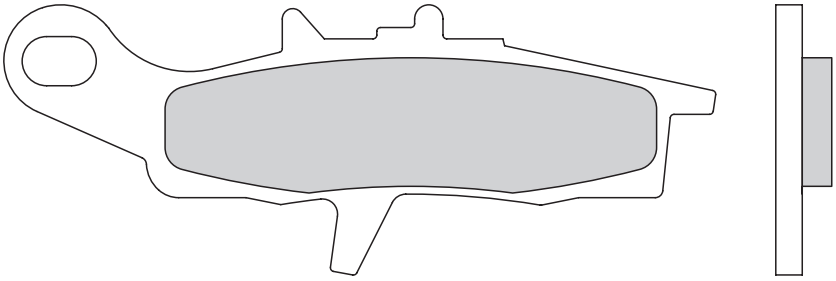

mm 120,0 x 26,5
7,0

A | B

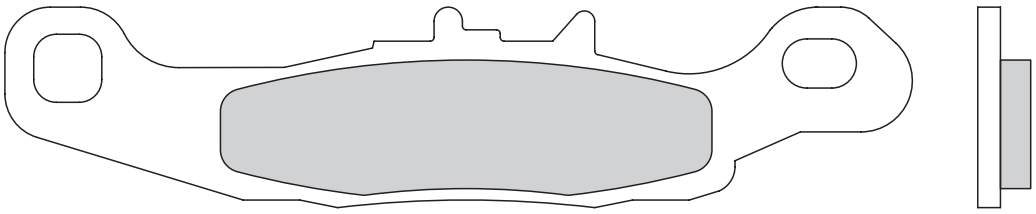

## GALFER FD 205

G1054
G1375
G1380

mm 115,0 x 41,1
7,5

A | A[1]

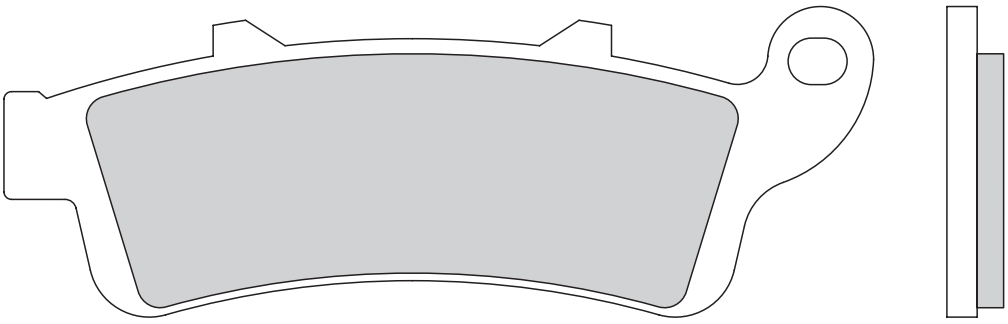

A | A

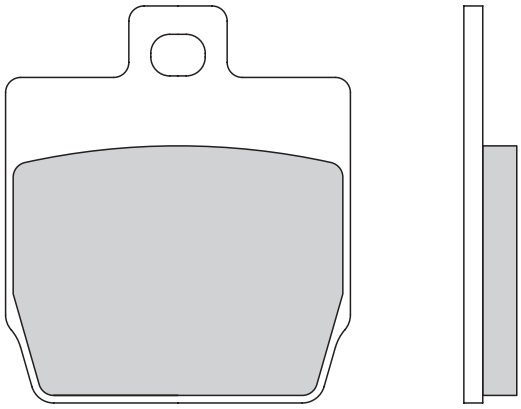

**GALFER FD 206**

G1054
G1050
G1380

mm 45,6 x 52,5

7,0

A | A[1]

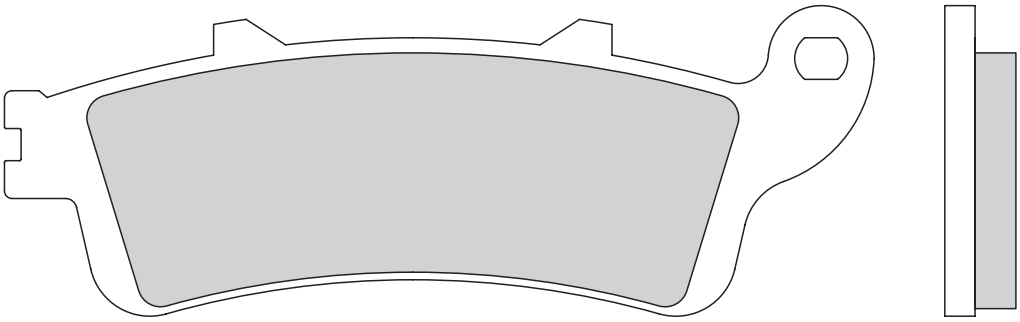

**GALFER FD 207**

G1054
G1050
G1370
G1380

mm 115,0 x 41,1

9,4

**FD205** (th. 8,3mm) can replace **FD207** (not vice versa) | **FD205** (th. 8,3mm) puede sustituir **FD207** (no al revés)

A | A

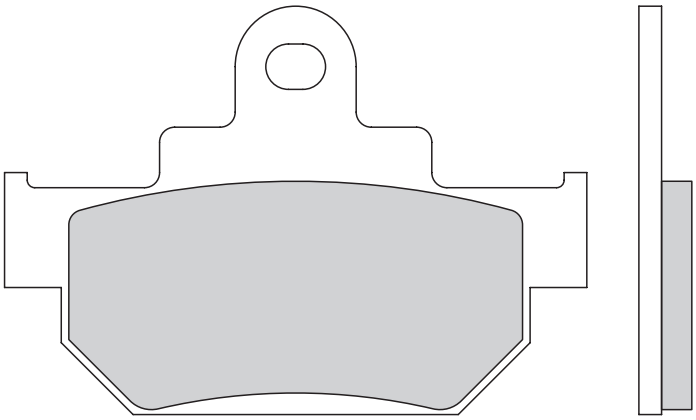

**GALFER FD 209**

G1054
G1050

mm 77,0 x 54,0

7,0

A | A

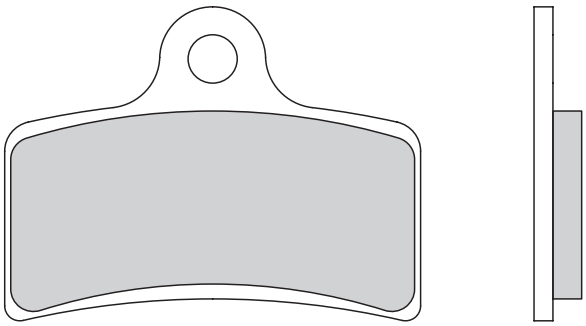

**GALFER FD 210**

G1054
G1805

mm 55,0 x 42,2

6,3

## GALFER FD 214

G1054
G1050
G1371
G1380

mm 99,8 x 31,0

9,0

A A

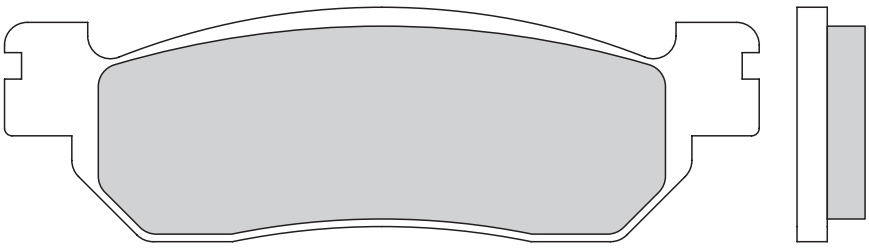

## GALFER FD 218

G1054

mm 51,9 x 59,8

8,8

A A

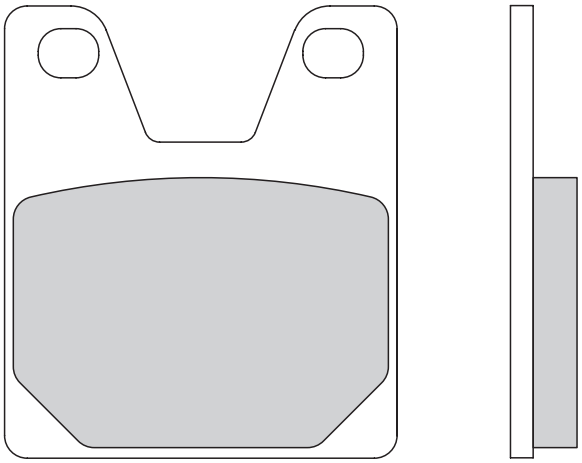

## GALFER FD 219

G1054
G1370
G1375
G1003
G1300

mm 75,0 x 55,3

8,3

A A

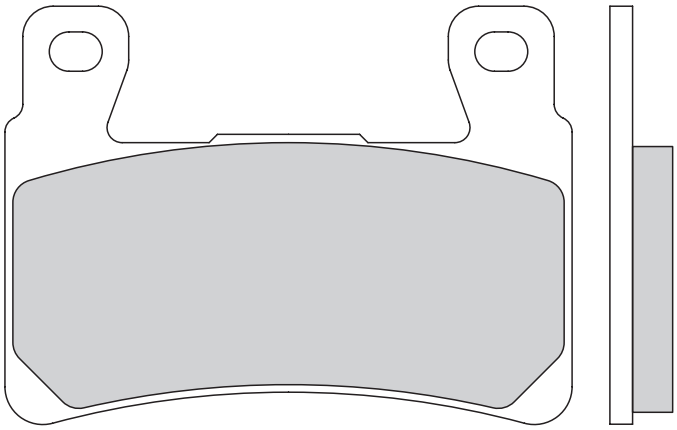

## GALFER FD 220

G1054
G1050
G1371
G1380

mm 50,8 x 53,9

8,0

A A

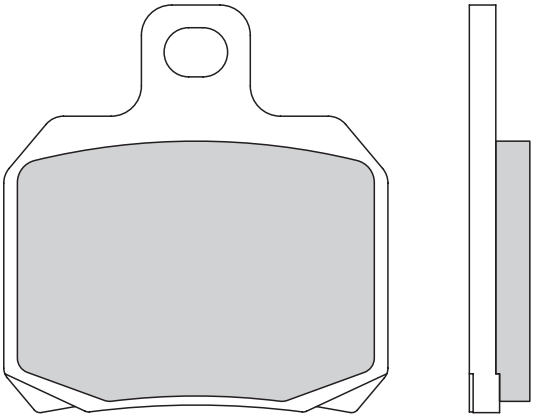



SEMI METAL → G1054 SCOOTER → G1050 TRIAL TOP → G1805 SINTERED → G1370-71 G1375 G1380-83 G1396 G1397 GP → G1003-G1300

A | A

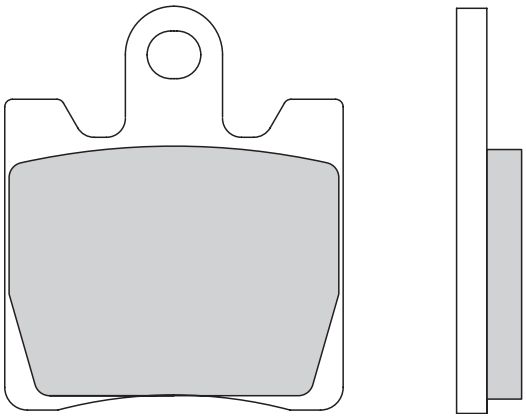

GALFER
**FD 222**
G1054
G1050
G1380

mm 44,8 x 53,4

8,6

A | A

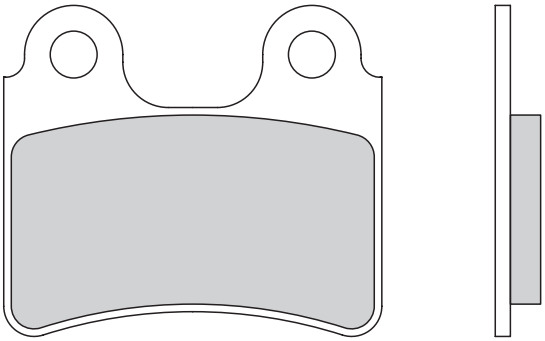

GALFER
**FD 223**
G1054
G1805

mm 50,0 x 43,8

6,0

A | A

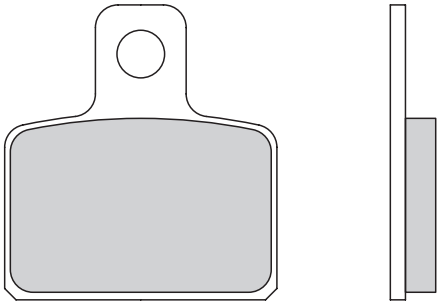

GALFER
**FD 224**
G1054
G1050
G1805

mm 36,0 x 39,0

6,0

A | A

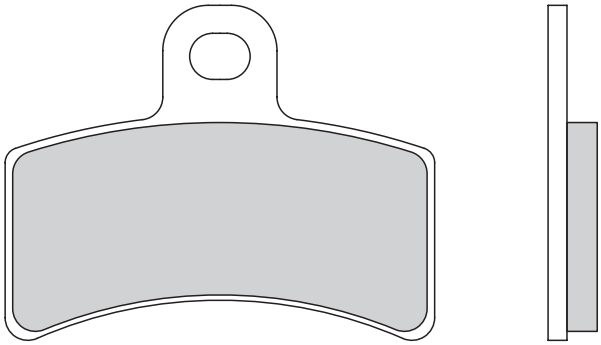

GALFER
**FD 225**
G1054
G1050
G1805

mm 56,8 x 44,3

6,5

## GALFER FD 226 G1054

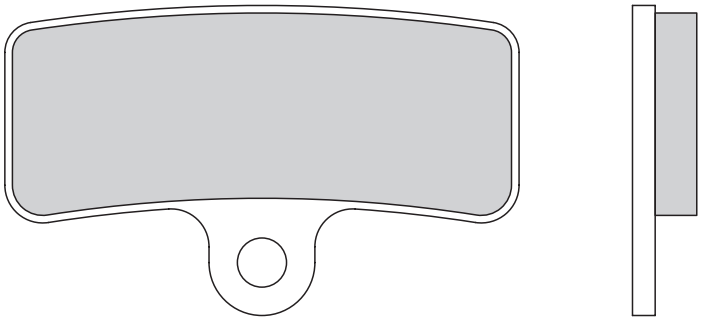

A | A

mm 68,0 x 41,0

8,5

## GALFER FD 228 G1054 G1050 G1380

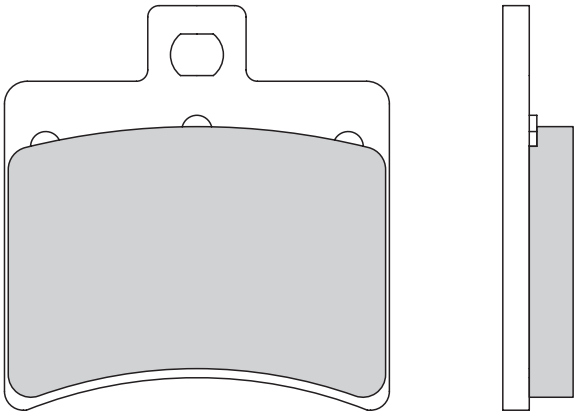

A | A

mm 50,9 x 53,5

9,3

## GALFER FD 230 G1054 G1396

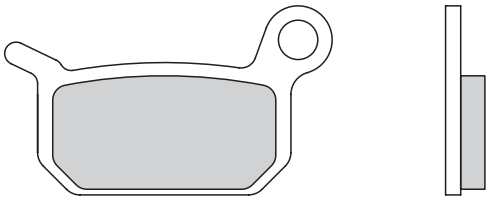

A | A[1]

mm 43,3 x 25,9

5,1

## GALFER FD 232 G1054 G1050

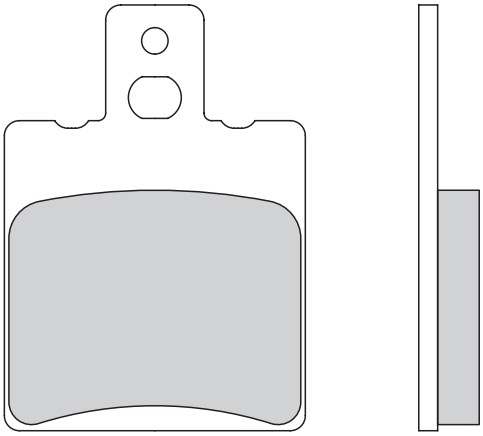

A | A

mm 39,8 x 56,3

8,0

A | A

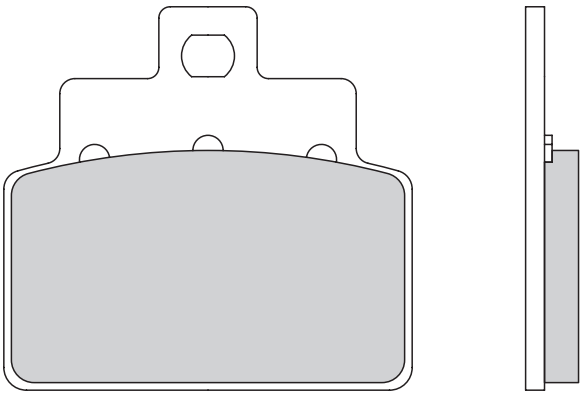

GALFER
**FD 234**
G1054
G1050

mm 54,0 x 50,7

7,0

A | B

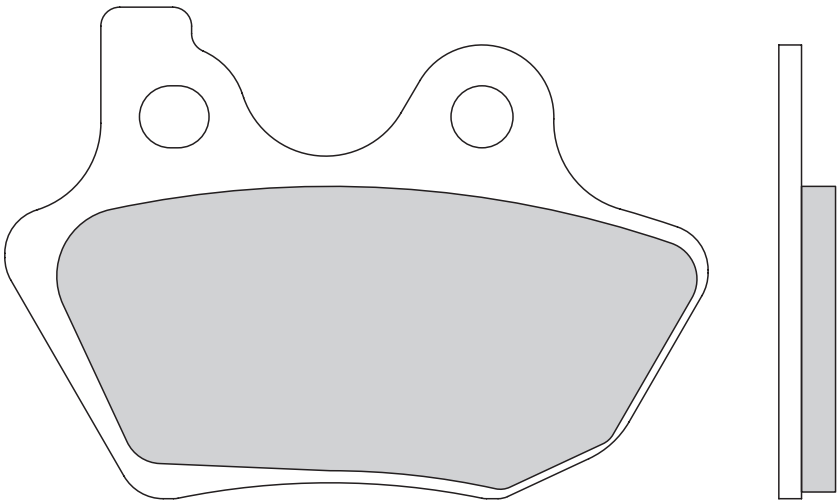

GALFER
**FD 235**
G1054
G1370

mm 93,0 x 65,0

7,5

A | B

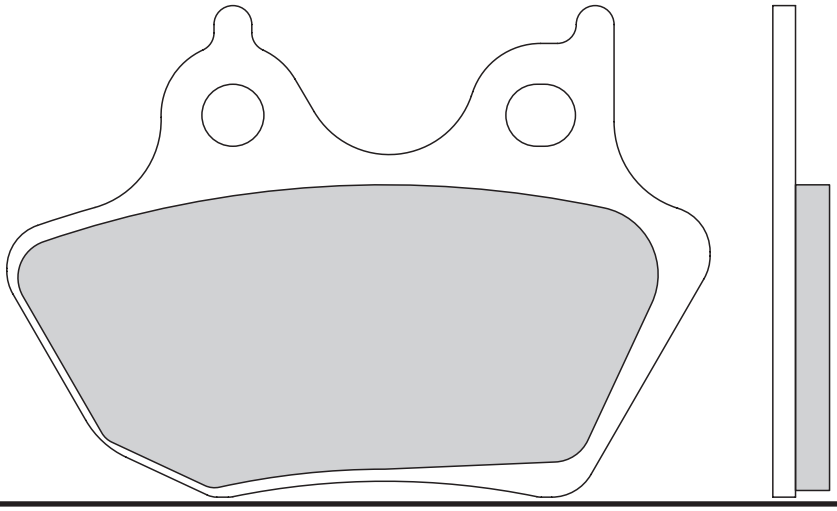

mm x

A | A

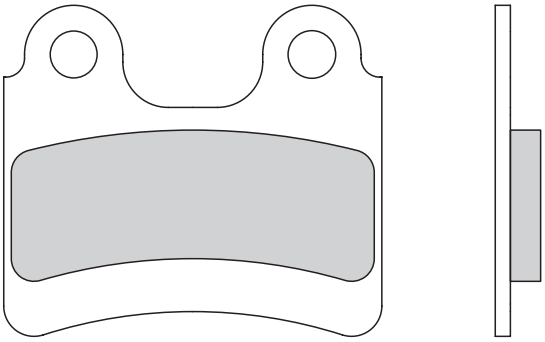

GALFER
**FD 238**
G1054
G1805

mm 50,0 x 43,8

6,0

## GALFER FD 239

G1054
G1805

mm 36,0 x 39,0
6,0

A | A

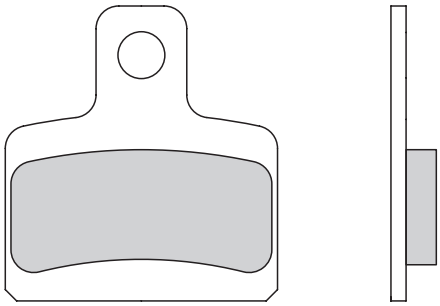

## GALFER FD 245

G1054
G1050
G1380

mm 117,5 x 40,0
8,4

A | A[1]

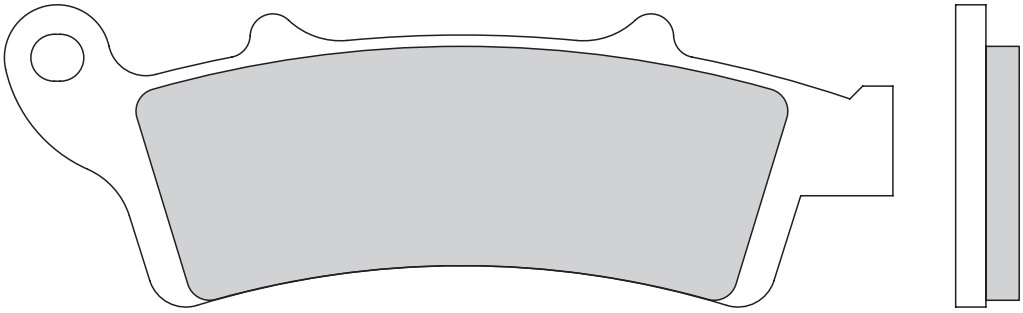

## GALFER FD 251

G1054

mm 74,9 x 54,6
9,0

A | A

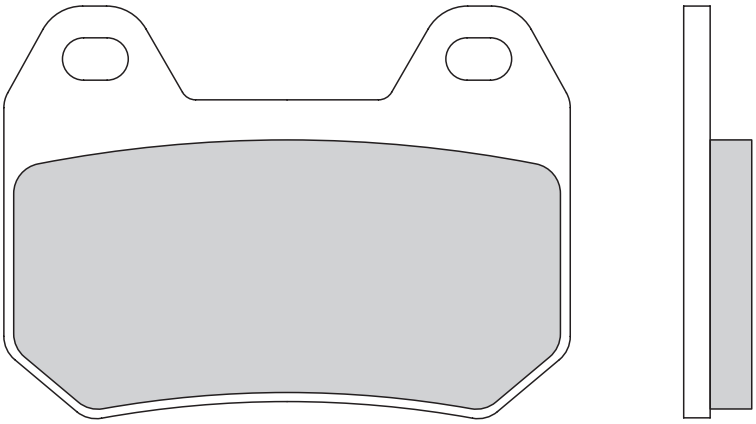

## GALFER FD 252

G1054
G1050

mm 56,0 x 36,0
10,2

A | B

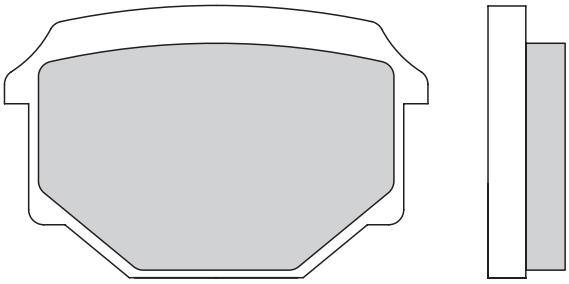

A B

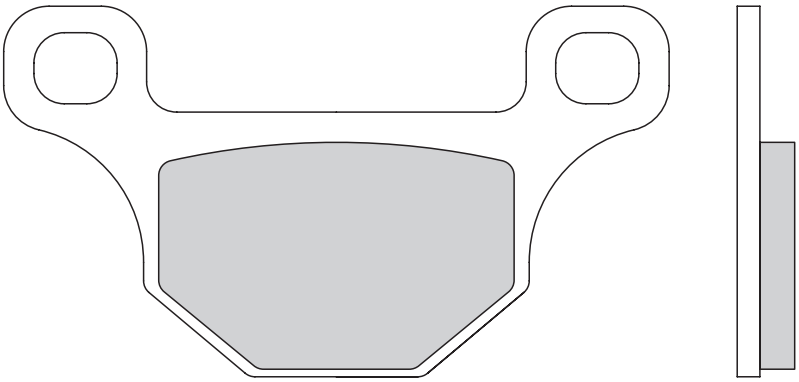

mm 88,0 x 49,0
7,6

A B

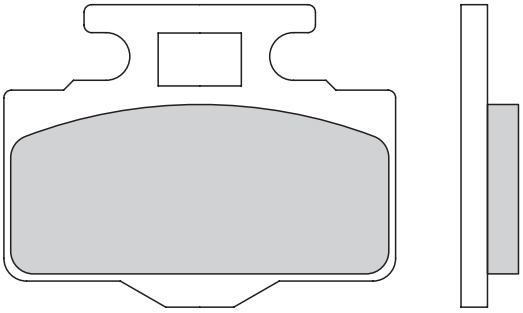

GALFER FD 254
G1054
G1396

mm 51,8 x 40,0
7,6

A B

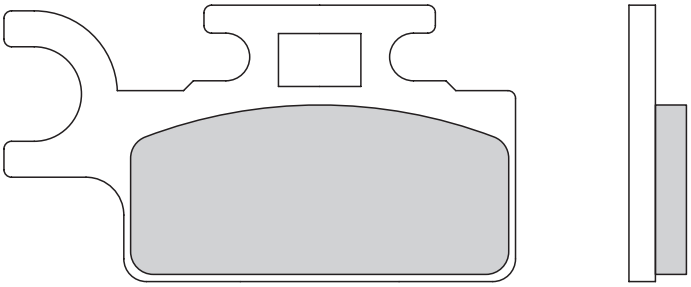

mm 67,7 x 36,5
7,6

A B

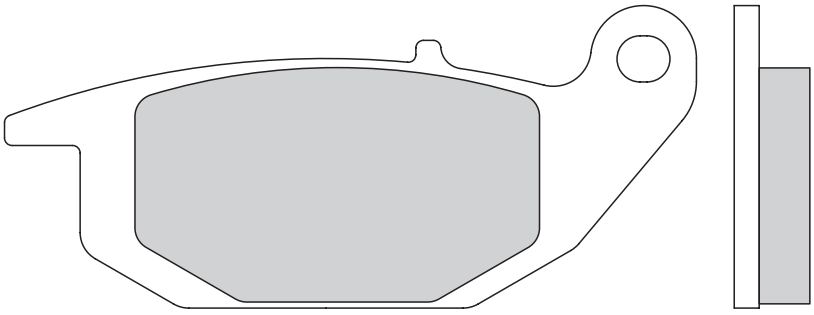

GALFER FD 259
G1054
G1050

mm 91,5 x 40,0
10,0

mm 107,0 x 42,5
10,0

A B

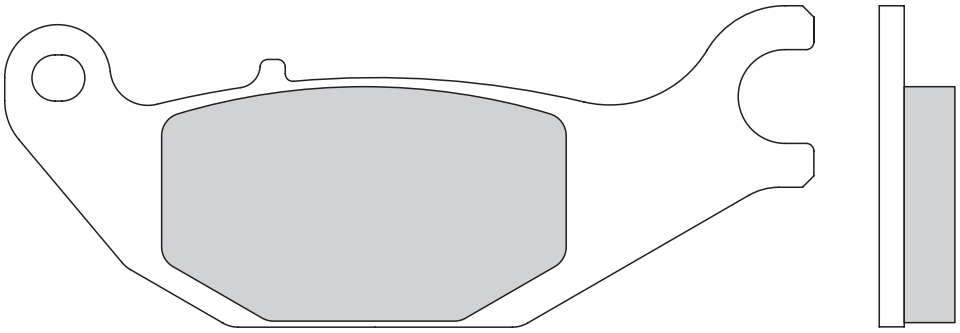

## GALFER FD 260

G1054
G1050
G1380

mm 100,0 x 38,4
11,8

A A

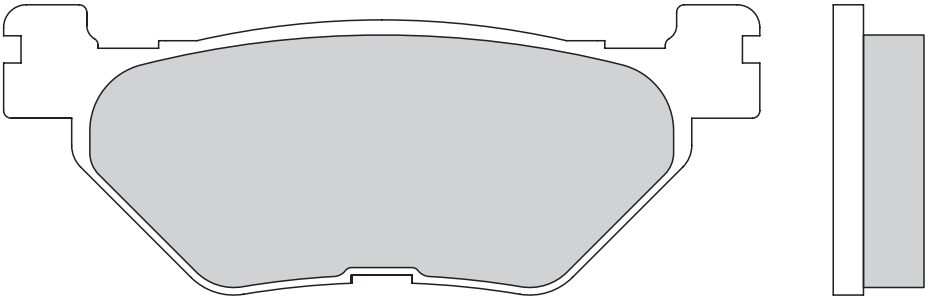

**FD295** (th. 9,5mm) can replace **FD260** (not vice versa) | **FD295** (th. 9,5mm) puede sustituir **FD260** (no al revés)

## GALFER FD 261

G1054
G1050
G1397

mm 64,1 x 36,8
10,8

mm 85,0 x 44,0
8,6

A B

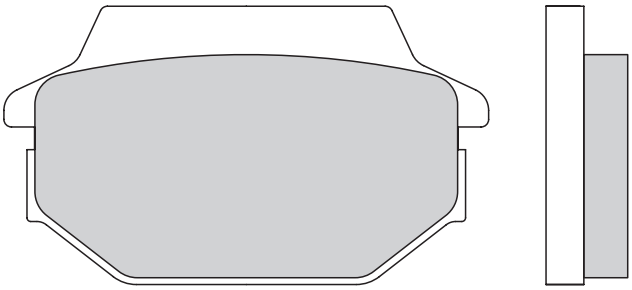

A B

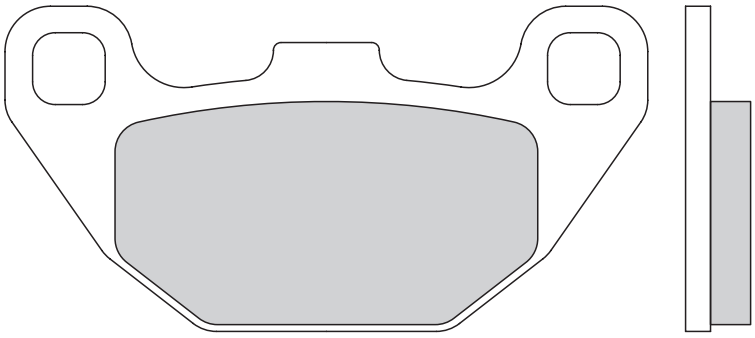

A | A
4x

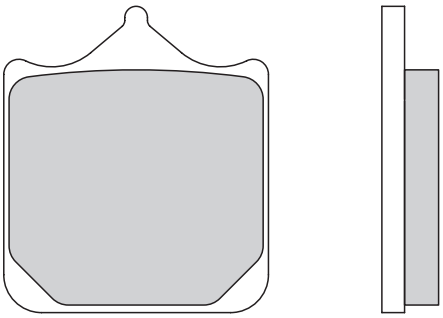

GALFER
**FD 262**
G1054
G1370
G1375
G1300

mm 35,0 x 40,5
7,5

A | A

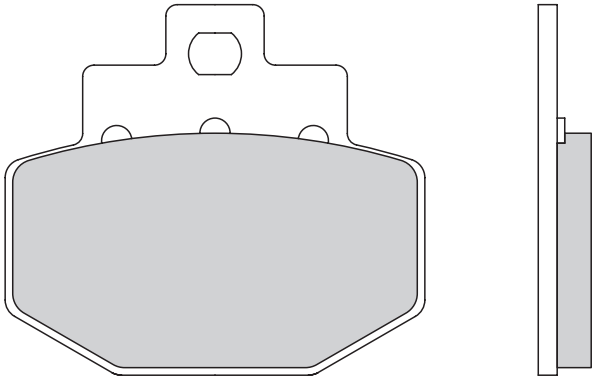

GALFER
**FD 263**
G1054

mm 55,5 x 49,0
7,0

A | A[1]

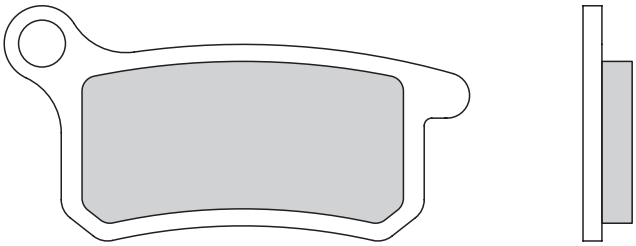

GALFER
**FD 265**
G1054
G1396

mm 61,5 x 31,1
6,5

A | A[1]

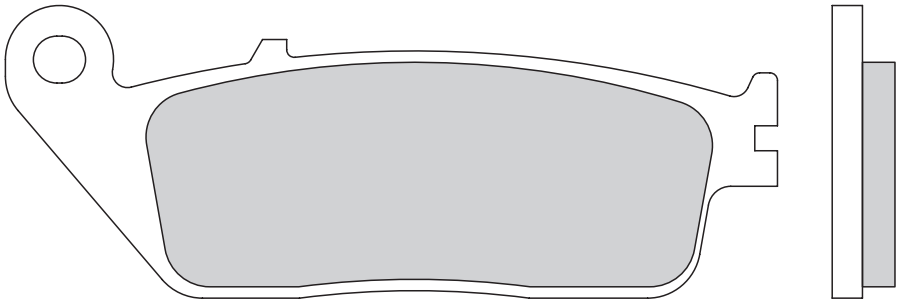

GALFER
**FD 266**
G1054
G1050
G1370
G1375
G1380

mm 102,1 x 38,7
8,3

## GALFER FD 267

G1054
G1371

mm 59,8 x 57,2
9,5

A A

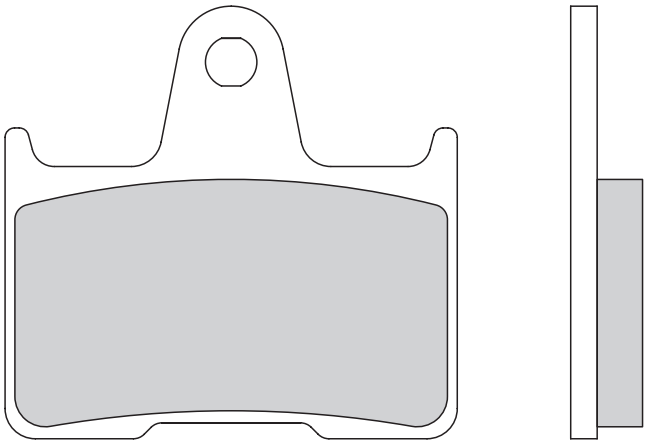

## GALFER FD 270

G1054
G1050
G1380

mm 50,0 x 47,2
6,8

A A

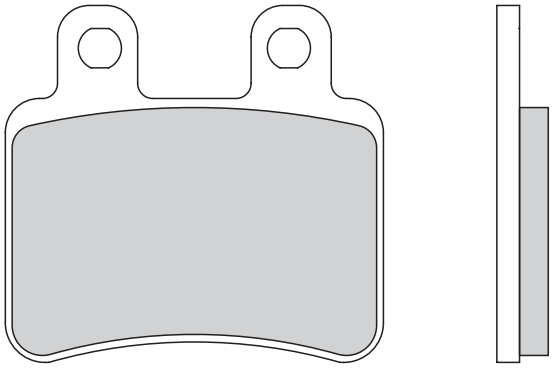

**FD410** (th. 5,25mm) can replace **FD270** (not vice versa) | **FD410** (th. 5,25mm) puede sustituir **FD270** (no al revés)

## GALFER FD 271

G1054
G1370
G1375

mm 77,3 x 51,4
8,6

A A

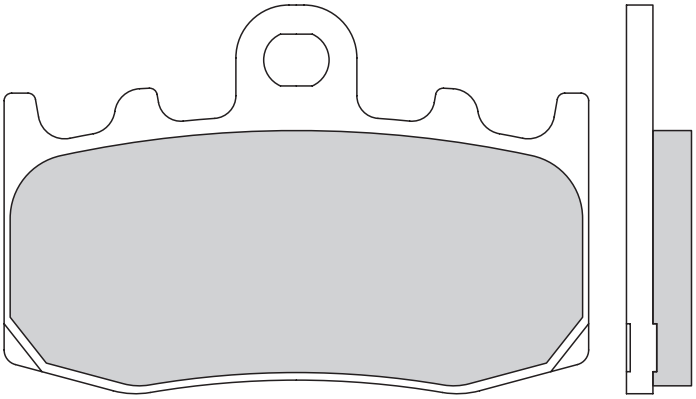

## GALFER FD 272

G1054
G1370

mm 81,3 x 45,9
8,9

A A

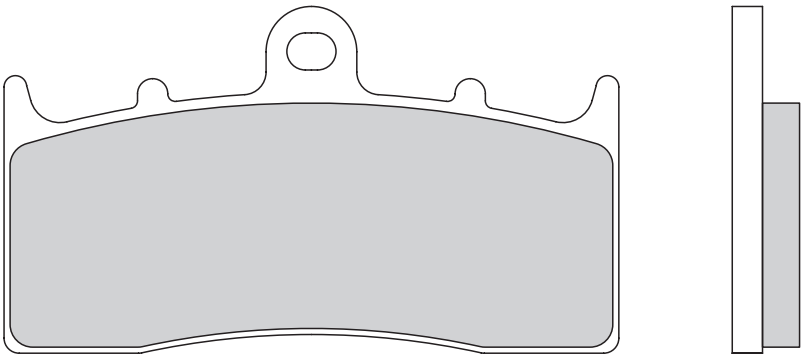

A | A

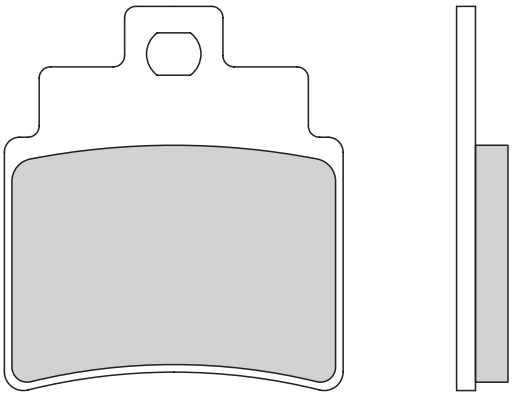

GALFER
**FD 275**
G1054
G1050
G1380
G1397

mm 44,8 x 50,8
6,8

A | A

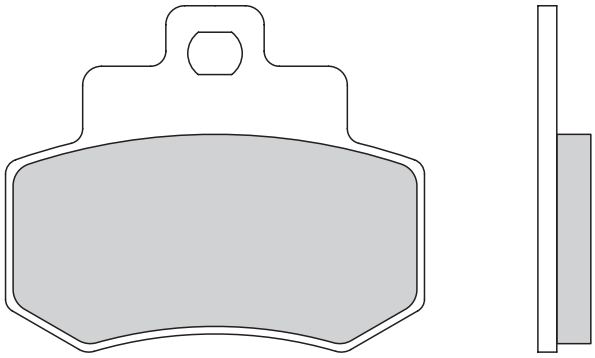

GALFER
**FD 276**
G1054

mm 55,4 x 45,8
7,0

A | B

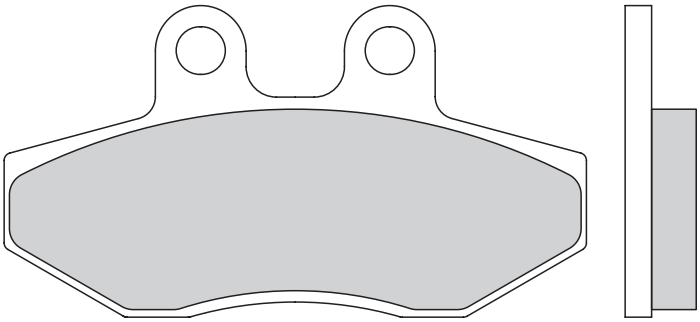

GALFER
**FD 277**
G1054
G1050
G1380

mm 77,0 x 41,2
9,0

A | B

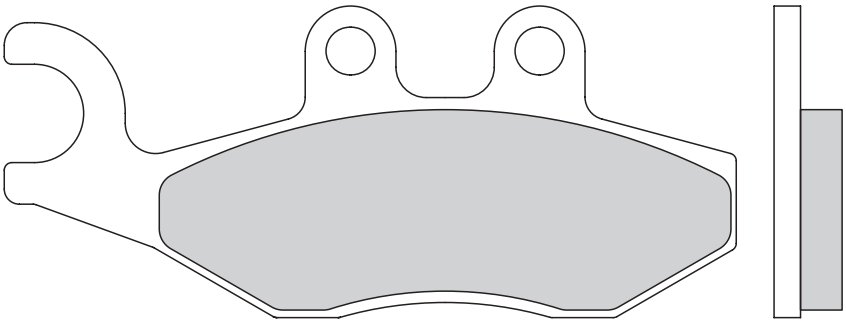

mm 96,9 x 41,2
9,0

## GALFER FD 278

G1054
G1396

mm 60,0 x 44,0
9,4

A | A1

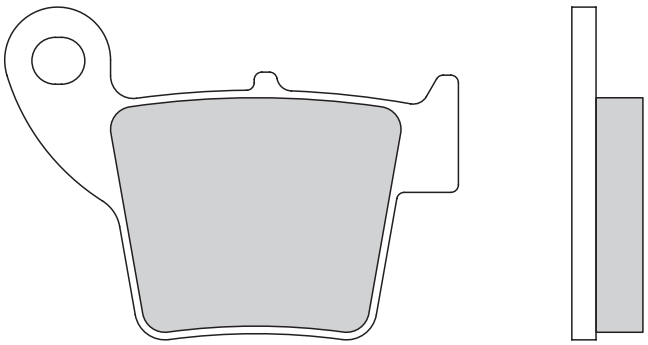

## GALFER FD 284

G1054
G1050
G1380

mm 81,8 x 42,3
9,3

A | A

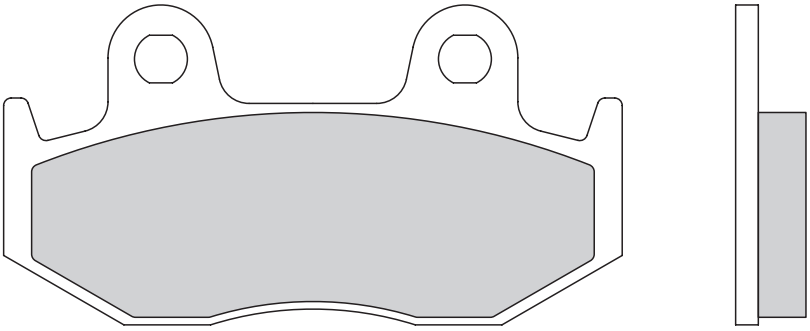

**FD063** (th. 7,2mm) can replace **FD284** (not vice versa) | **FD063** (th. 7,2mm) puede sustituir **FD284** (no al revés)

## GALFER FD 286

G1054
G1396

mm 66,85 x 36,0
10,5

A | A1

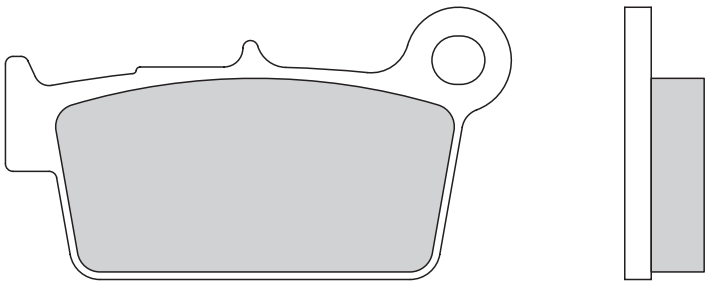

**FD456** (th. 9,0mm) can replace **FD286** (not vice versa) | **FD456** (th. 9,0mm) puede sustituir **FD286** (no al revés)

## GALFER FD 290

G1054
G1370
G1375
G1300

mm 38,7 x 49,6
9,0

A | A
4x

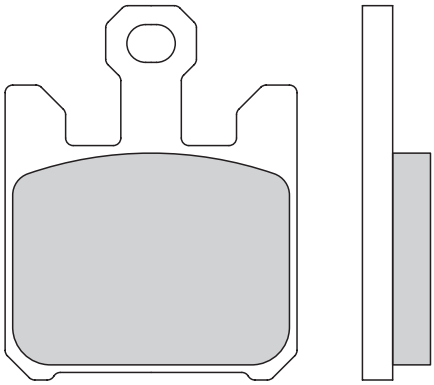

A | A1

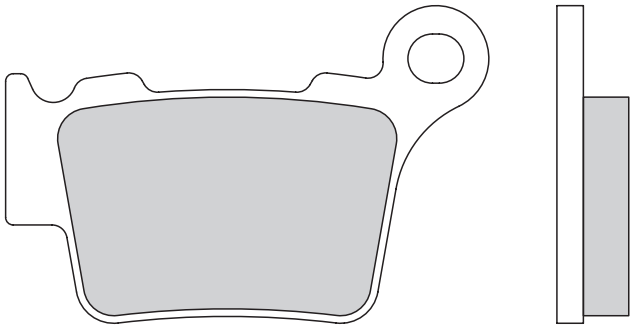

GALFER FD 291
G1054
G1396

mm 63,9 x 42,0
9,5

A | A

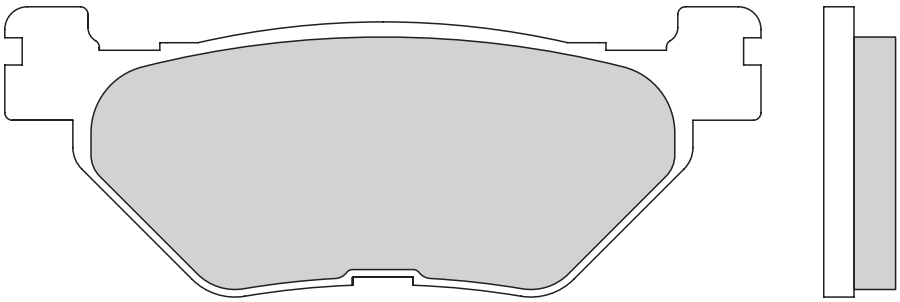

GALFER FD 295
G1054
G1371

mm 100,0 x 38,4
9,5

A | B

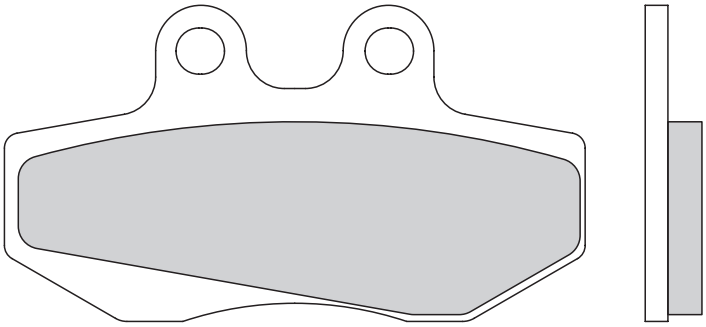

GALFER FD 297
G1054
G1050

mm 76,8 x 41,8
7,5

A | B

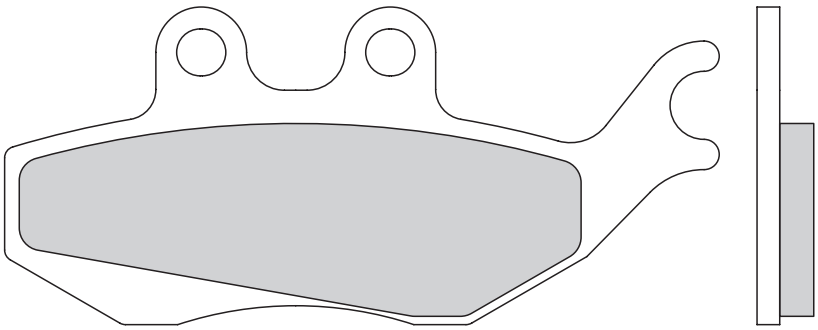

mm 94,5 x 42,0
7,5

## GALFER FD 298

G1054
G1050

mm 98,5 x 33,1
7,6

mm 111,2 x 36,2
7,6

A B

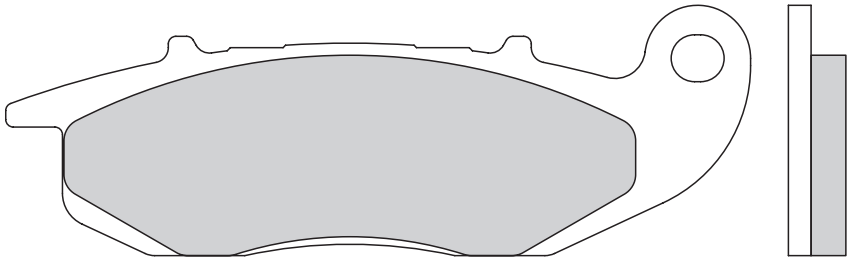

A B

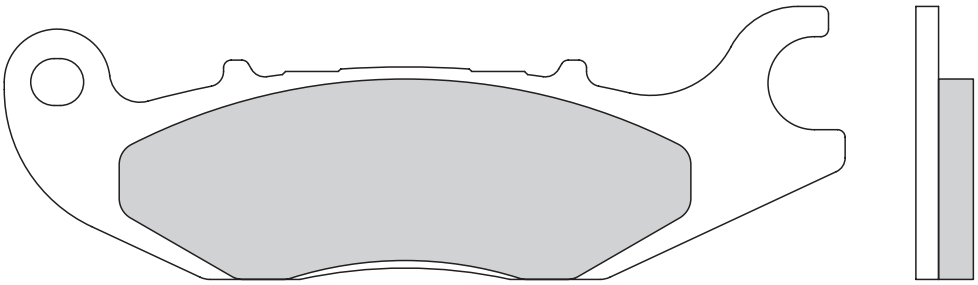

## GALFER FD 299

G1054

mm 46,4 x 45,3
6,5

A A

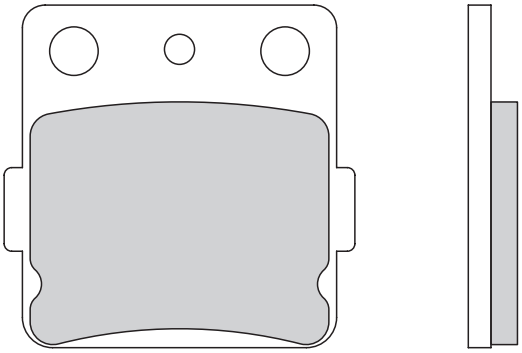

## GALFER FD 300

G1054
G1397

mm 73,4 x 43,4
7,0

A A

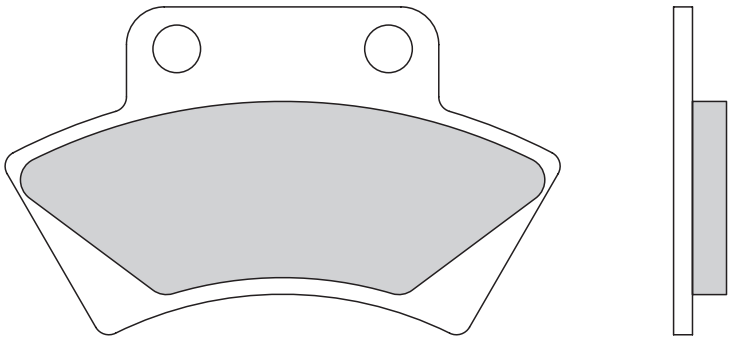

A A

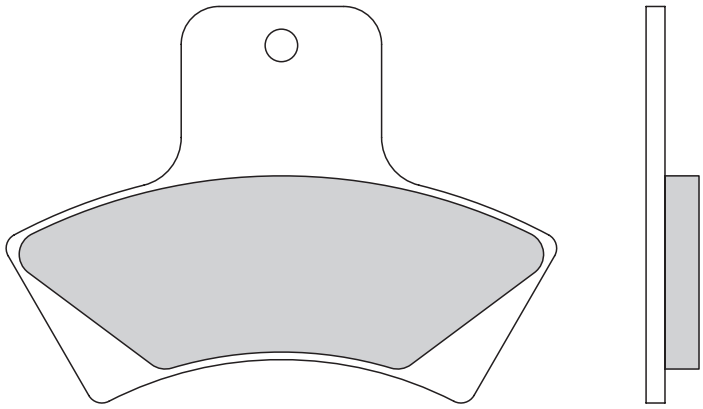

GALFER
**FD 301**
G1054
G1397

mm 72,8 x 52,4
7,0

A A

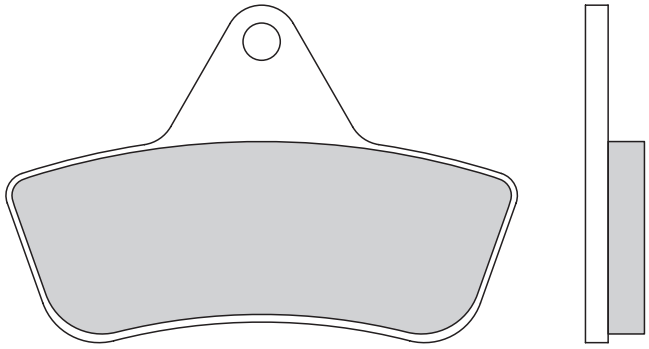

GALFER
**FD 302**
G1396
G1397

mm 67,3 x 44,6
7,8

A A

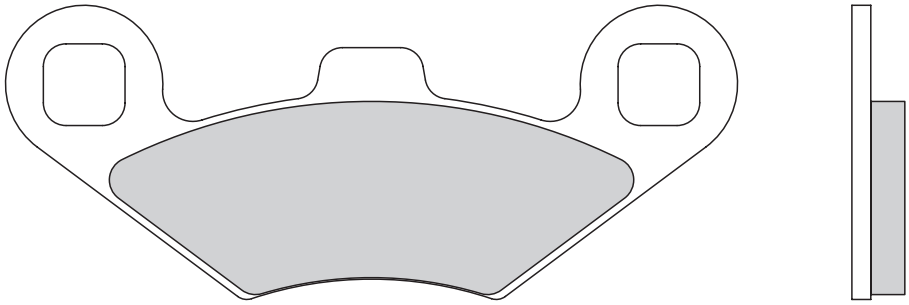

GALFER
**FD 303**
G1054
G1397

mm 96,8 x 38,9
7,0

A A
4x

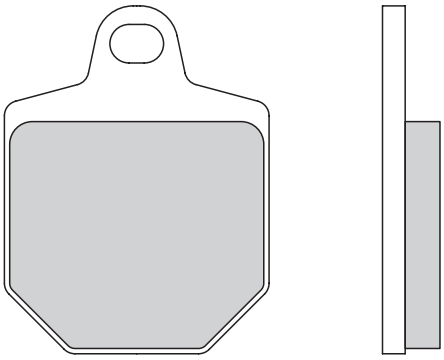

GALFER
**FD 304**
G1054
G1375

mm 35,0 x 46,0
7,6

## GALFER FD 315

G1054
G1050
G1397

| | |
|---|---|
| mm | 62,0 x 40,6 |
| | 9,5 |
| mm | 82,0 x 40,7 |
| | 9,5 |

A B

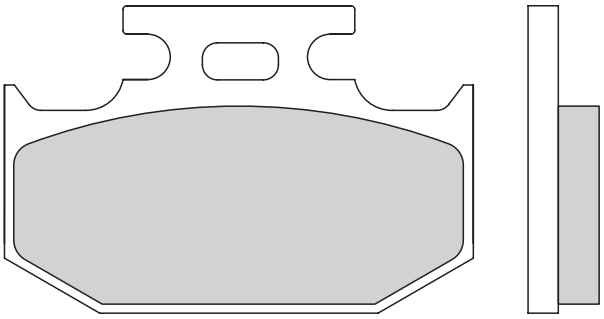

A B

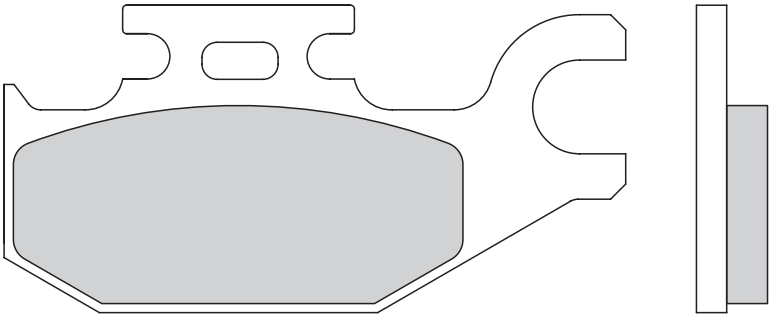

## GALFER FD 317

G1397

| | |
|---|---|
| mm | 90,3 x 41,2 |
| | 8,2 |

A A

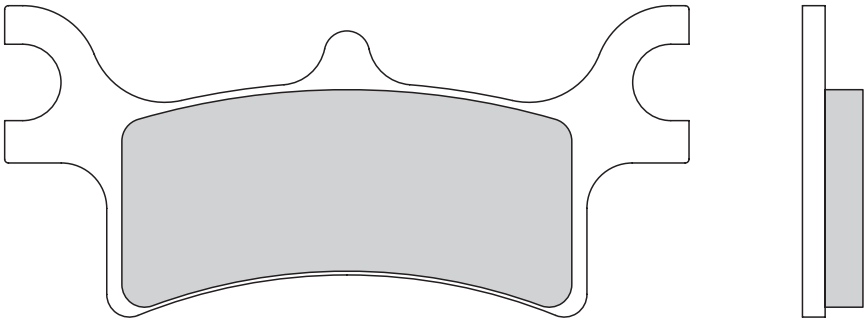

## GALFER FD 318

G1054
G1397

| | |
|---|---|
| mm | 62,0 x 40,6 |
| | 9,5 |

A B

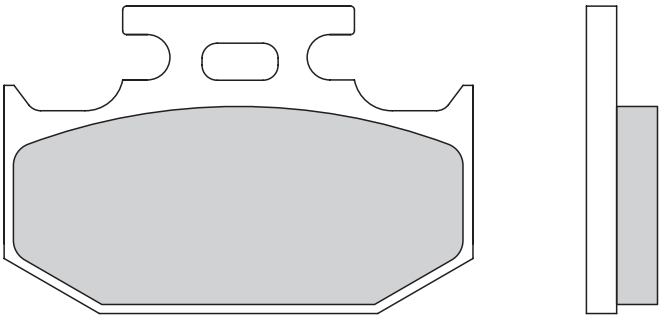

A B

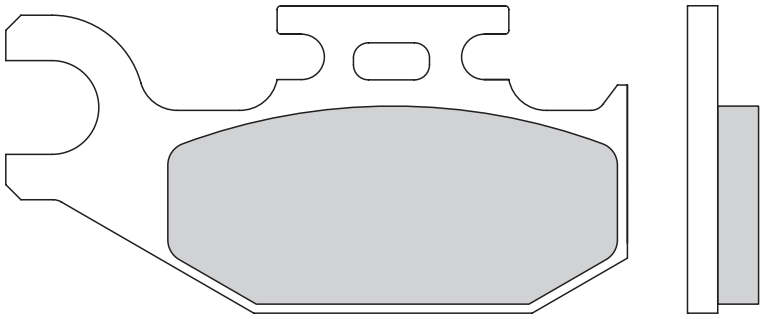

mm 82,0 x 40,7

9,5

A B

GALFER FD 319 G1397

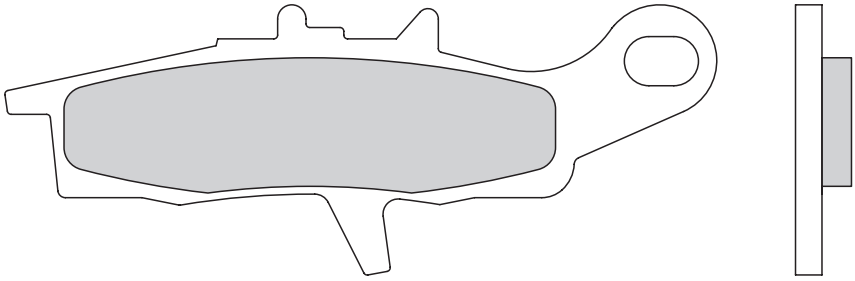

mm 94,7 x 35,6

7,5

A B

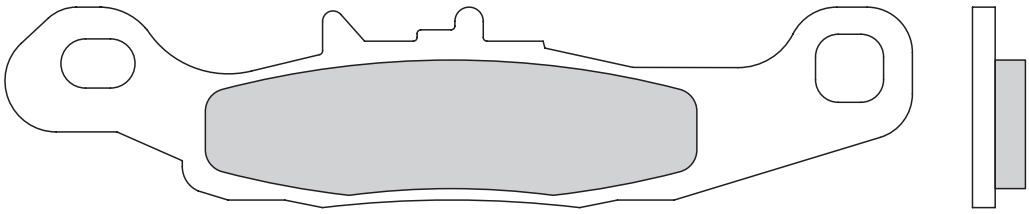

mm 119,5 x 26,4

7,1

A A

GALFER FD 320 G1054

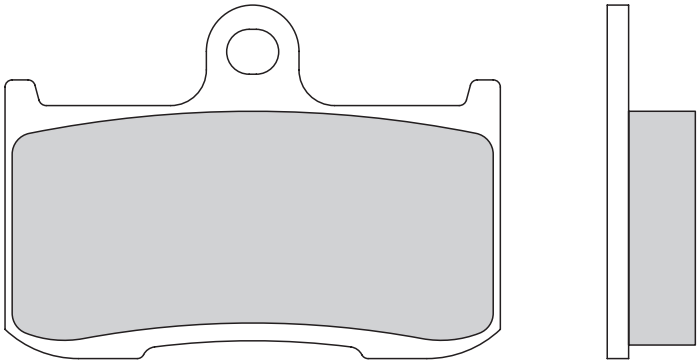

mm 65,5 x 44,8

11,7

## GALFER FD 321

G1397

mm 94,7 x 35,6

7,5

mm 119,5 x 26,4

7,1

A B

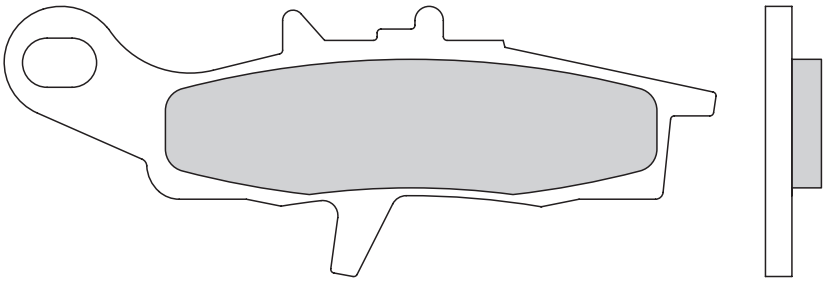

A B

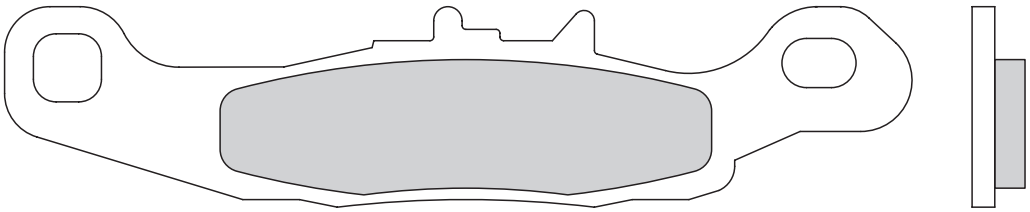

## GALFER FD 323

G1054
G1397

mm 75,0 x 39,5

11,7

A A

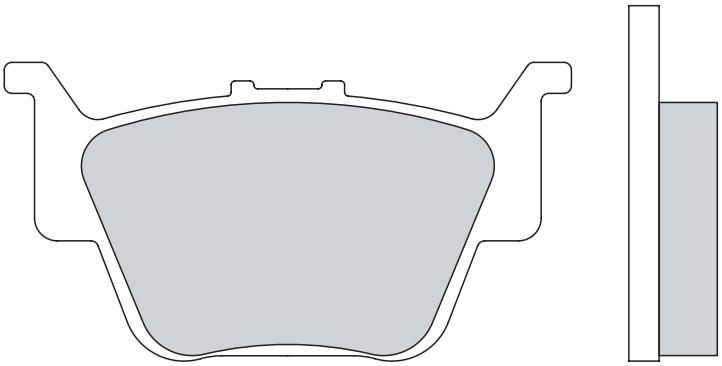

## GALFER FD 325

G1054
G1370
G1375
G1003

mm 71,4 x 50,0

8,0

A A

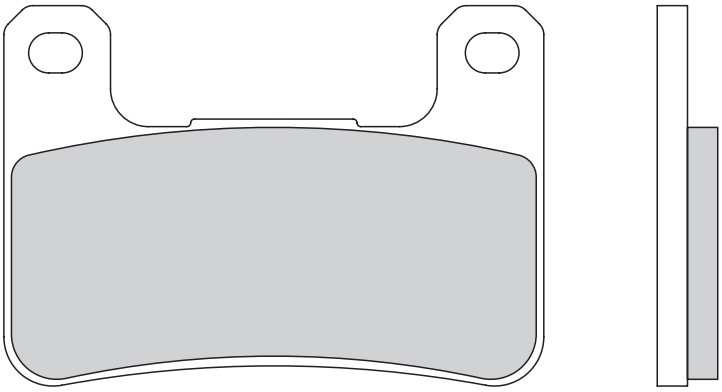

A | A

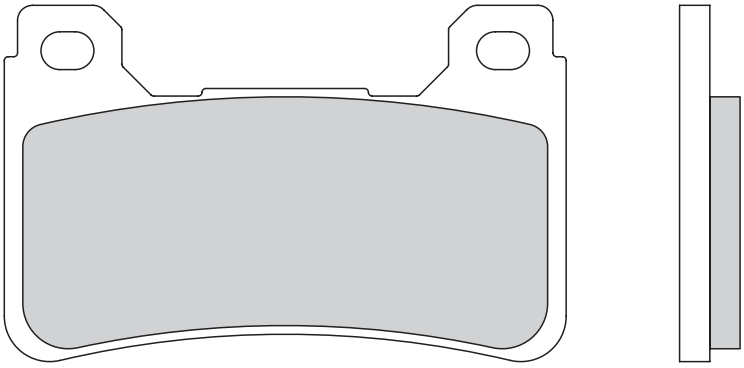

GALFER
**FD 326**
G1054
G1370
G1375
G1003
G1300

mm 74,3 x 47,1

7,9

A | A

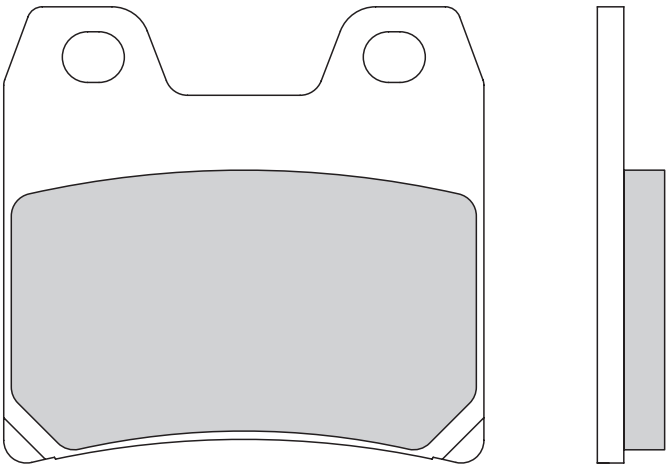

GALFER
**FD 329**
G1054
G1371

mm 63,4 x 60,7

8,9

A | A

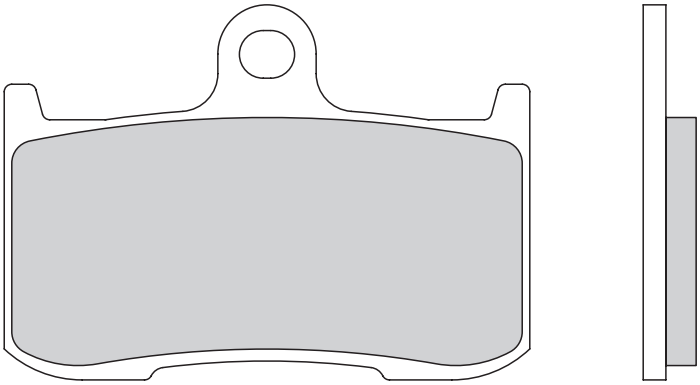

GALFER
**FD 331**
G1054
G1370
G1375
G1300

mm 69,5 x 49,6

7,0

A | B

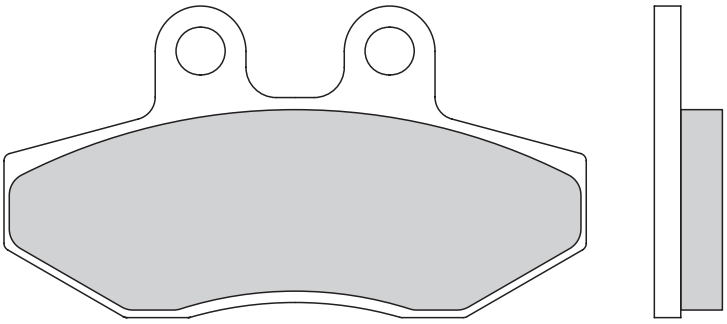

GALFER
**FD 334**
G1054
G1050
G1380

mm 77,0 x 41,2

9,0

mm 96,9 x 41,2
9,0

A B

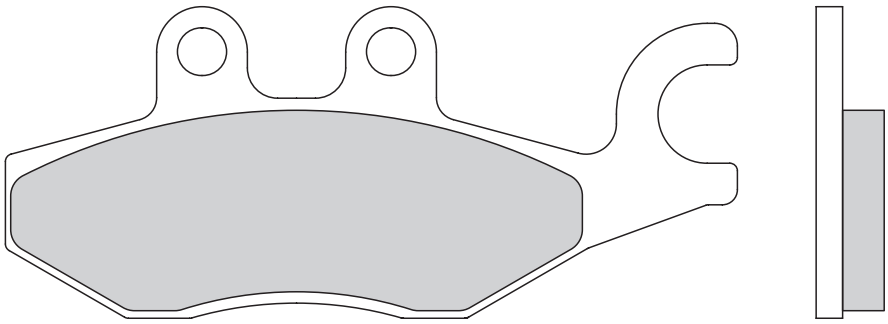

GALFER
FD
335
G1054
G1805

mm 41,0 x 44,7
6,4

A A1

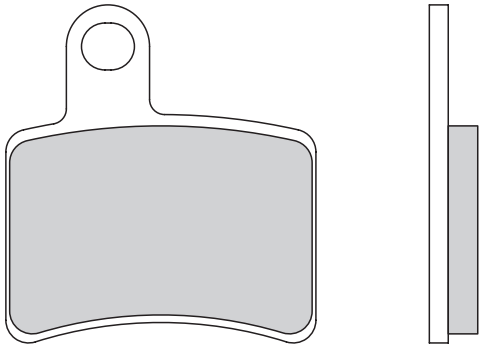

GALFER
FD
336
G1054
G1397

mm 73,0 x 47,0
10,8

A B

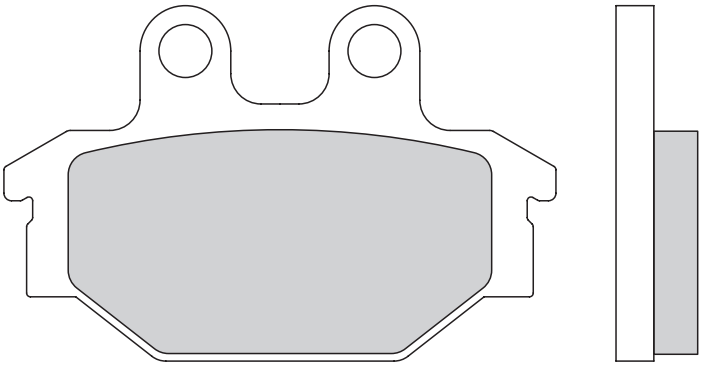

mm 94,1 x 47,0
8,6

A B

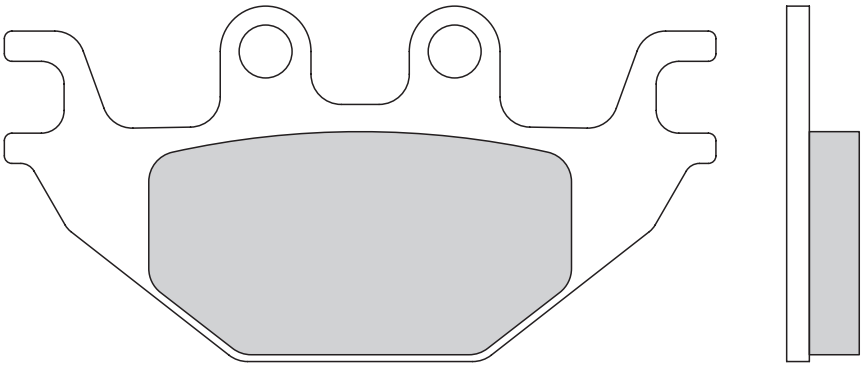

A | A1

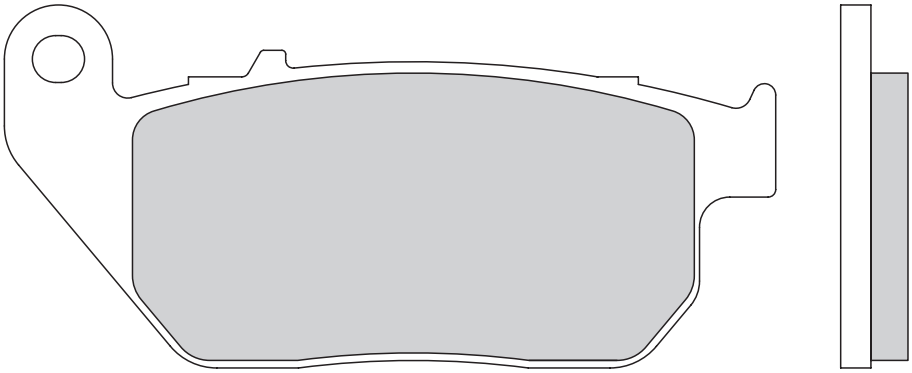

GALFER
**FD 339**
**G1370**

mm 102,0 x 45,9

10,0

A | A1

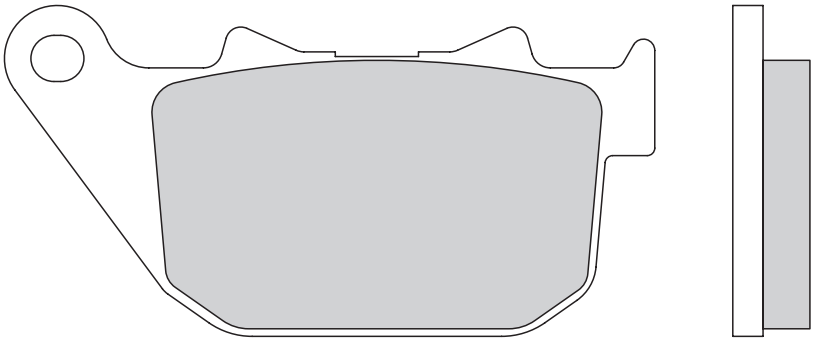

GALFER
**FD 340**
**G1371**

mm 86,0 x 44,5

10,4

A | A

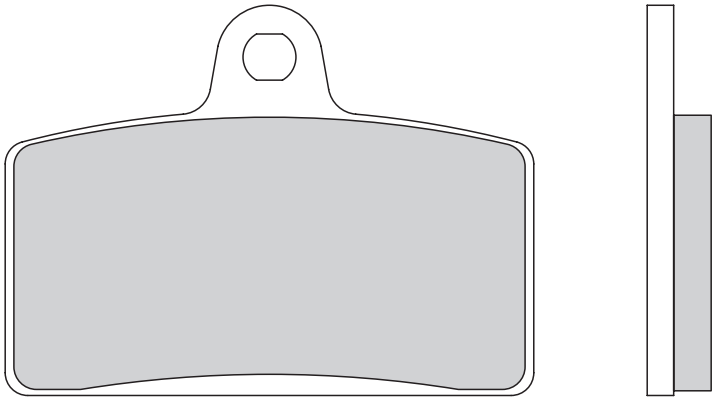

GALFER
**FD 341**
**G1054**
**G1050**

mm 69,9 x 51,6

7,5

A | A

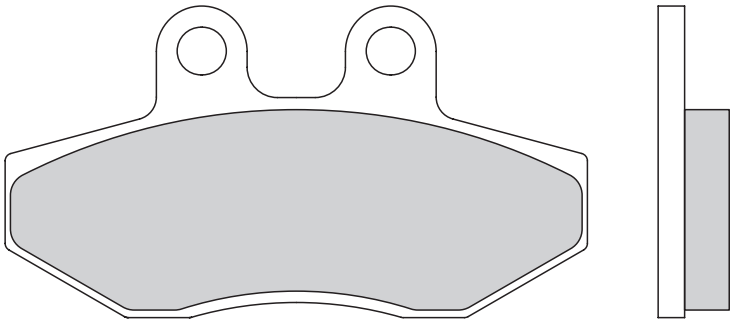

GALFER
**FD 342**
**G1054**
**G1050**

mm 77,0 x 41,2

9,4

## GALFER FD 343

G1054
G1050
G1380

mm 55,3 x 52,1
7,6

A | A

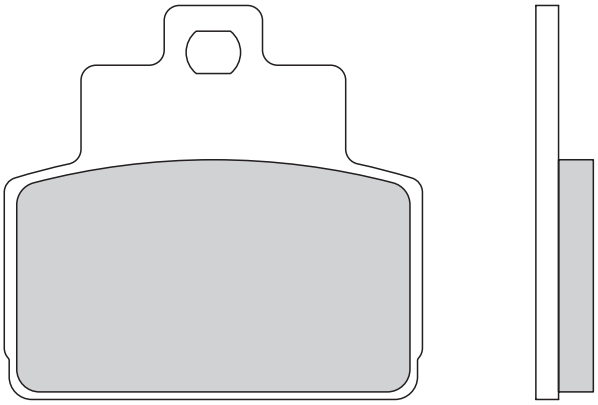

## GALFER FD 344

G1054
G1050
G1370
G1375
G1380

mm 118,0 x 45,2
9,2

A | A[1]

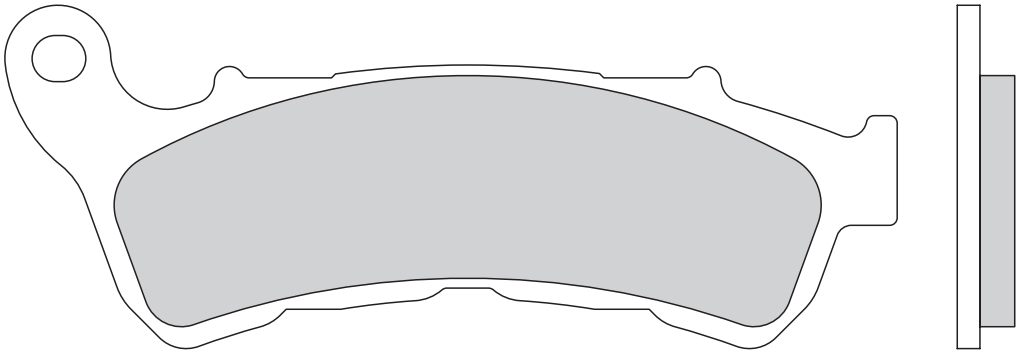

## GALFER FD 345

G1054
G1050
G1380

mm 81,7 x 37,7
8,8

A | A

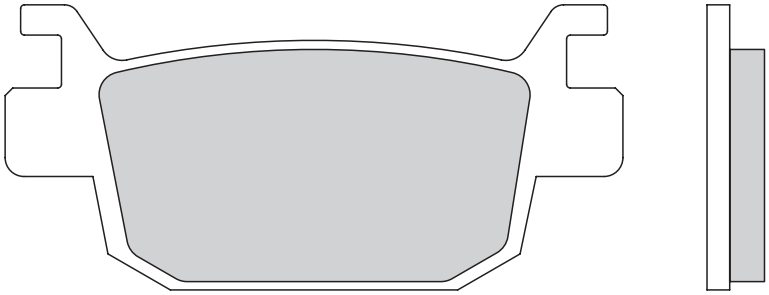

## GALFER FD 351

G1054

mm 55,4 x 41,0
7,0

A | A

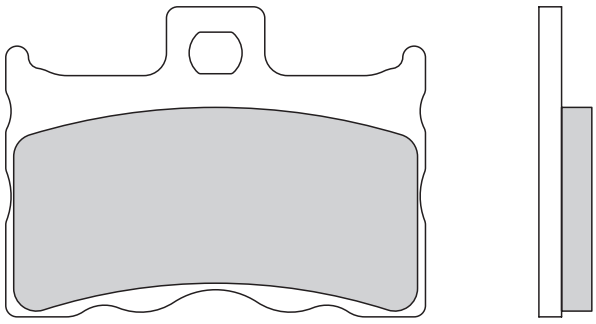

A | A

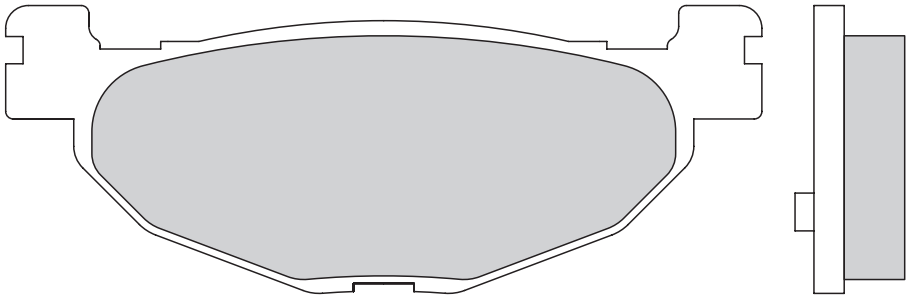

GALFER
**FD 352**
G1054
G1380

mm 100,0 x 38,1
12,0

A | A

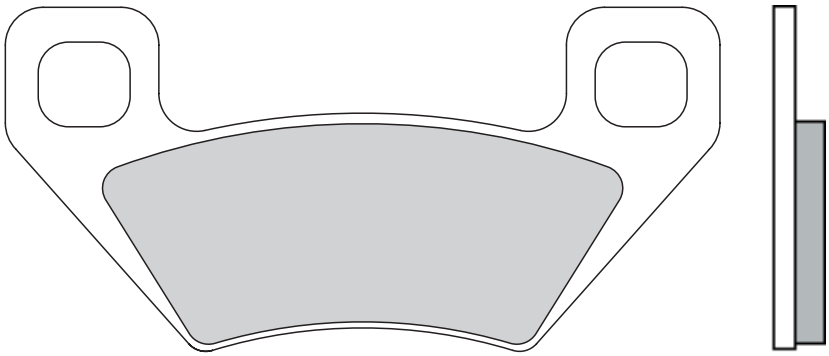

GALFER
**FD 353**
G1054
G1397

mm 94,5 x 45,5
7,0

A | A

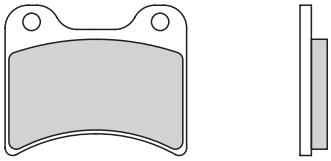

GALFER
**FD 354**
G1054

mm 24,0 x 19,9
3,6

A | A[1]

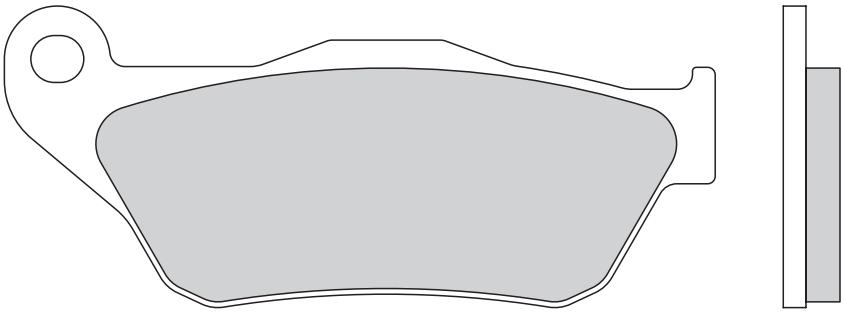

GALFER
**FD 355**
G1054
G1050
G1380

mm 94,0 x 39,9
7,5

## GALFER FD 356 G1054

mm 39,7 x 44,5

7,0

A | A

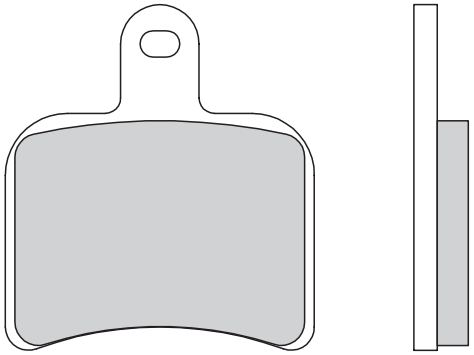

## GALFER FD 359 G1054 G1371

mm 89,2 x 40,6

9,8

A | A[1]

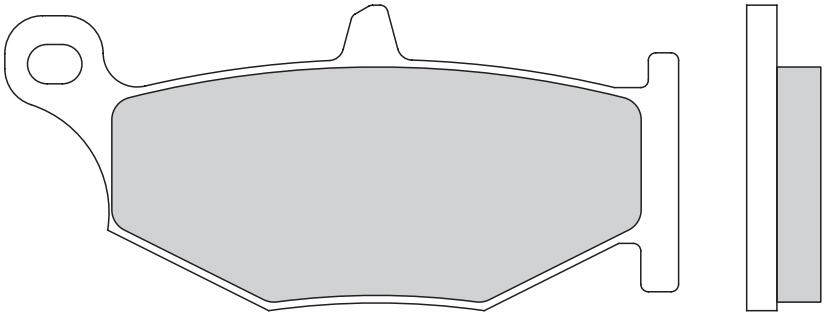

## GALFER FD 360 G1054

mm 55,5 x 42,0

7,0

A | A

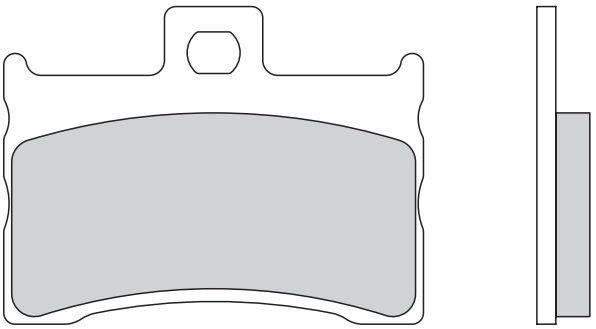

## GALFER FD 362 G1054 G1396

mm 75,6 x 41,1

8,2

A | B

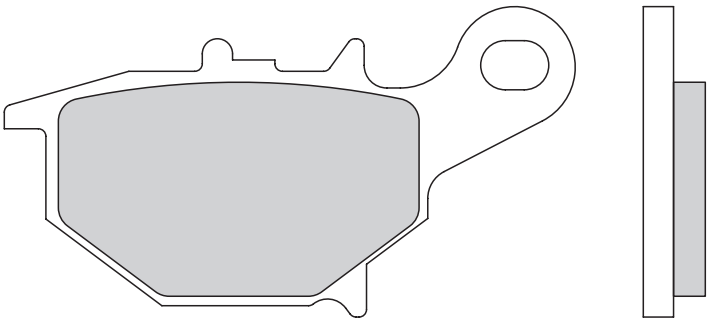

A | B

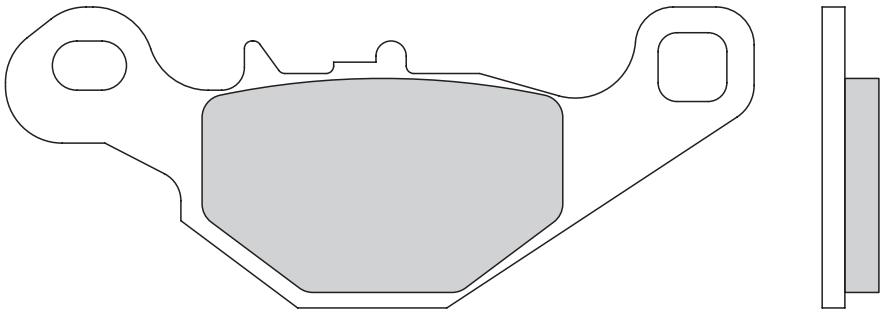

mm 99,0 x 39,8

7,5

A | A1

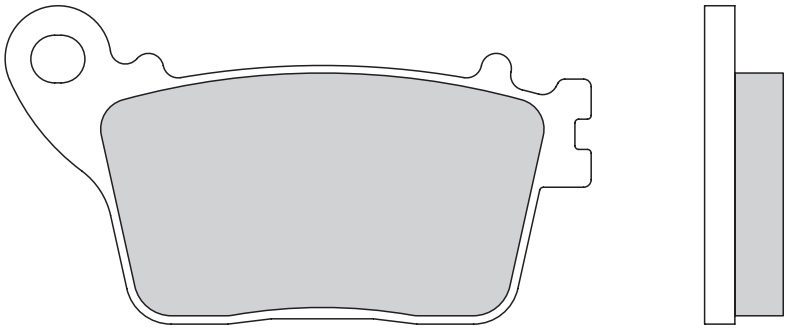

GALFER FD 363 G1054 G1371

mm 77,5 x 42,1

10,4

A | A1

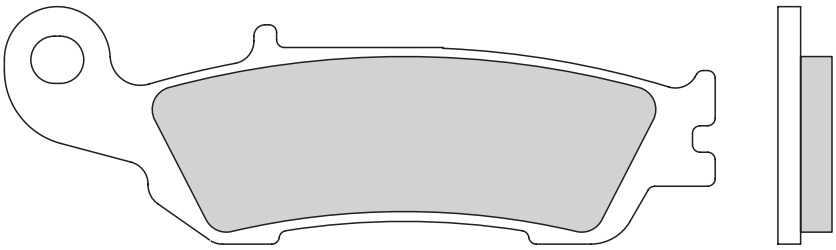

GALFER FD 364 G1054 G1396

mm 94,0 x 31,5

7,15

A | B

2x

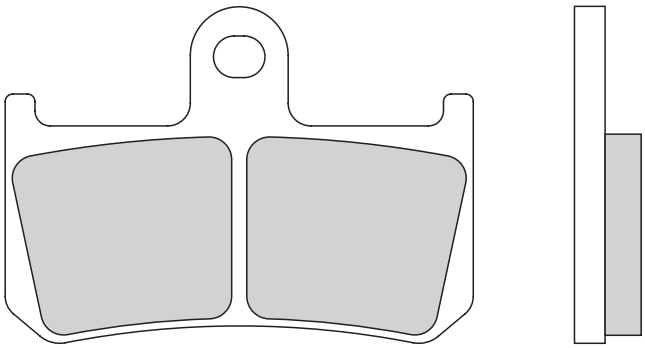

GALFER FD 365 G1375 G1300

mm 30,9 x 48,0

8,5

mm 61,9 x 44,8
8,5

A B
2x

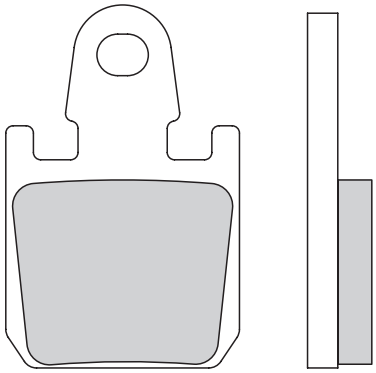

GALFER
FD 367
G1054
G1375

mm 68,6 x 55,6
8,8

A A

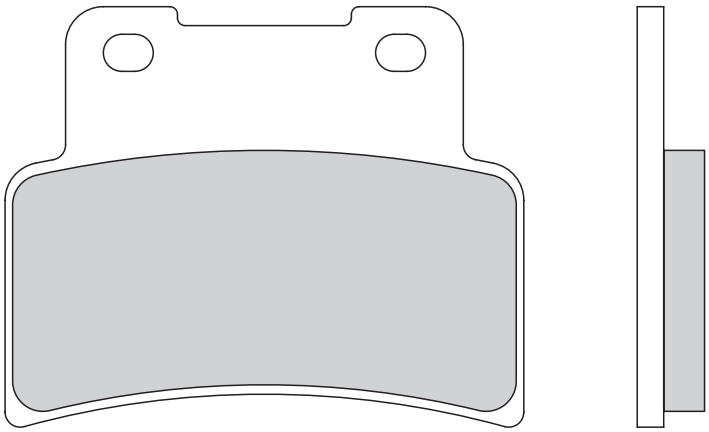

GALFER
FD 369
G1370

mm 91,9 x 58,5
7,0

A A[1]

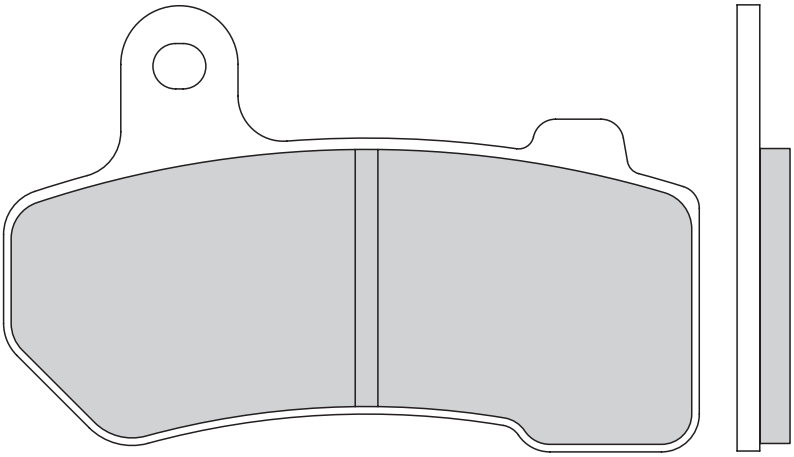

GALFER
FD 370
G1397

mm 81,9 x 38,5
10,0

A A

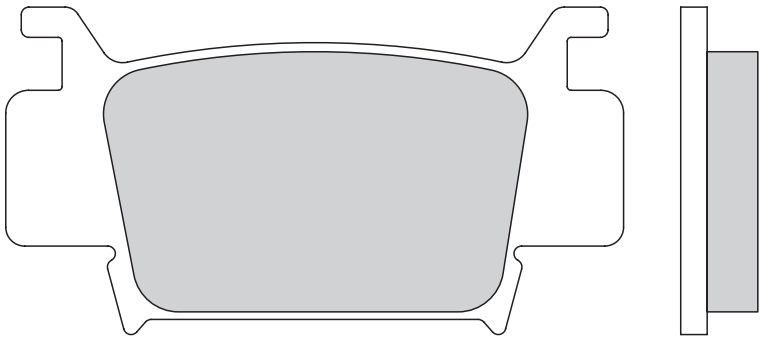



SEMI METAL → G1054 SCOOTER → G1050 TRIAL TOP → G1805 SINTERED → G1370-71 G1375 G1380-83 G1396 G1397 GP → G1003-G1300

A A
4x

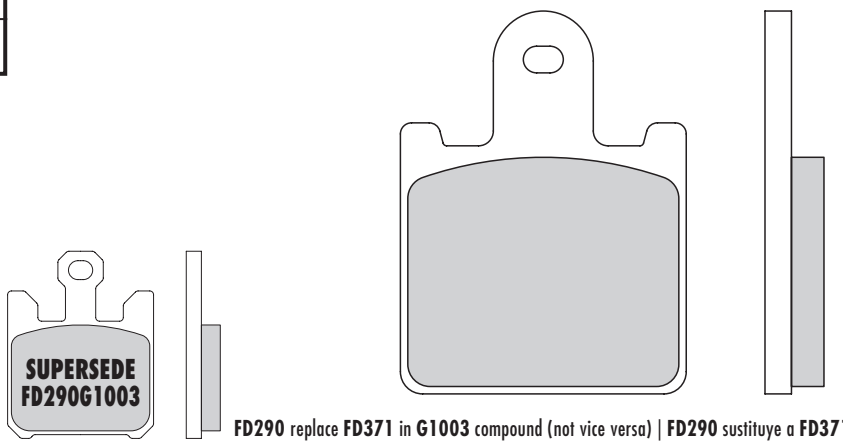


**FD290** replace **FD371** in **G1003** compound (not vice versa) | **FD290** sustituye a **FD371** en compuesto **G1003** (no al revés)

GALFER
**FD 371**
G1370
G1375
G1003
G1300

mm 37,7 x 49,9
7,8

A A
4x

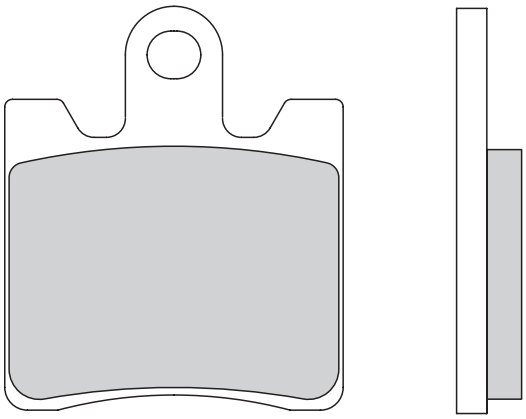

GALFER
**FD 372**
G1370
G1375

mm 44,8 x 53,6
8,7

A A

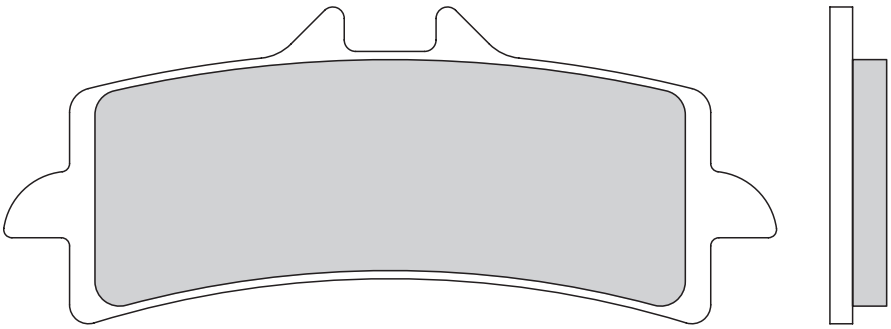

GALFER
**FD 373**
G1370
G1375
G1300
G1003

mm 102,2 x 41,9
7,5

A B

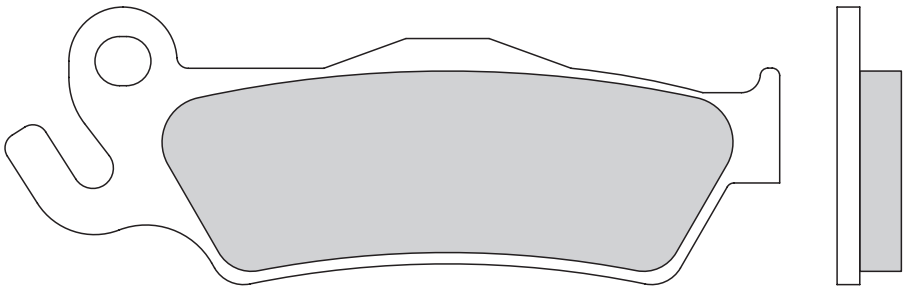

GALFER
**FD 374**
G1054

mm 102,9 x 37,3
8,5

mm 94,0 x 37,3
8,4

A B

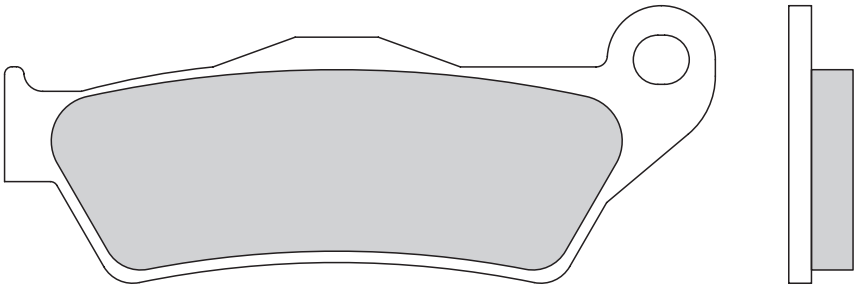

GALFER
FD 375
G1054

mm 97,9 x 64,2
8,0

A B

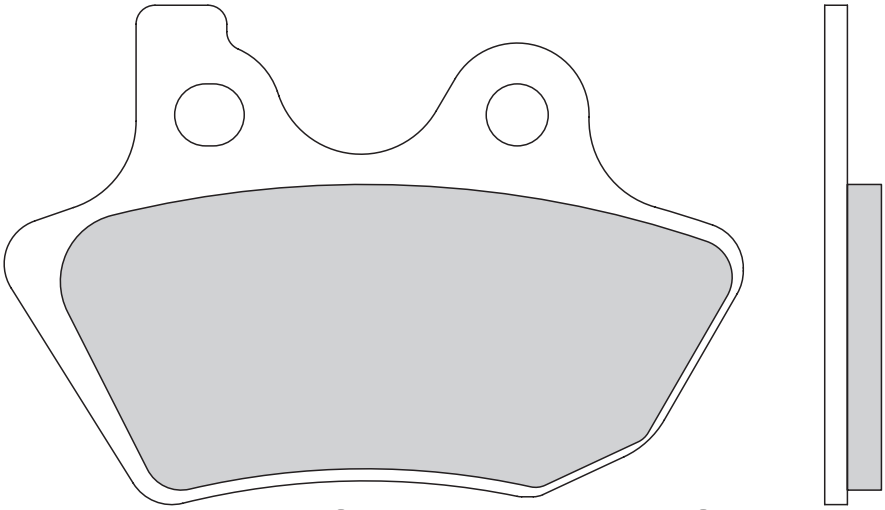

mm 97,9 x 64,2
8,0

A B

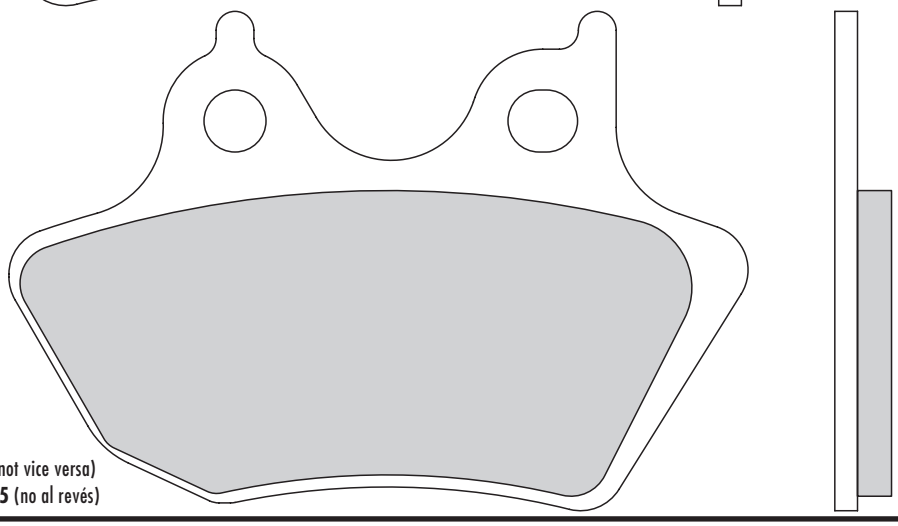

**FD235** (th. 7,5mm) can replace **FD375** (not vice versa)
**FD235** (th. 7,5mm) puede sustituir **FD375** (no al revés)

GALFER
FD 376
G1371

mm 97,6 x 64,2
8,0

A B

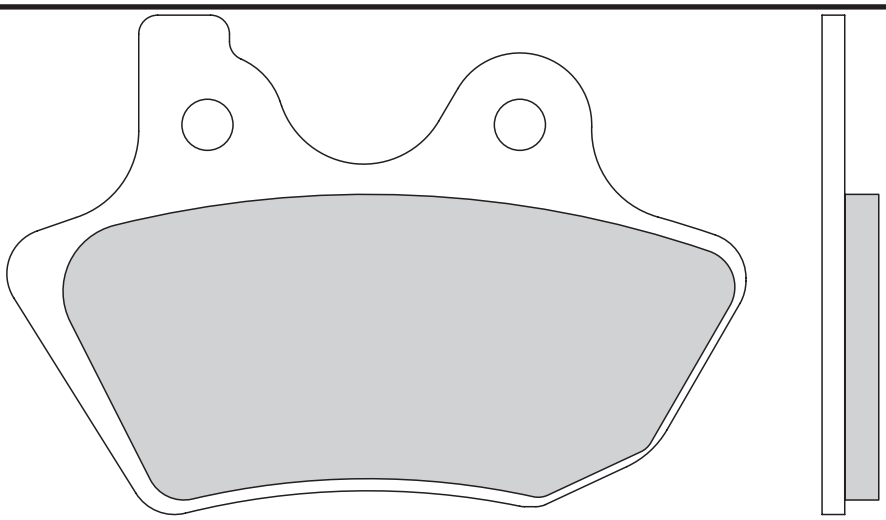



SEMI METAL → G1054 SCOOTER → G1050 TRIAL TOP → G1805 SINTERED → G1370-71 G1375 G1380-83 G1396 G1397 GP → G1003-G1300

A B

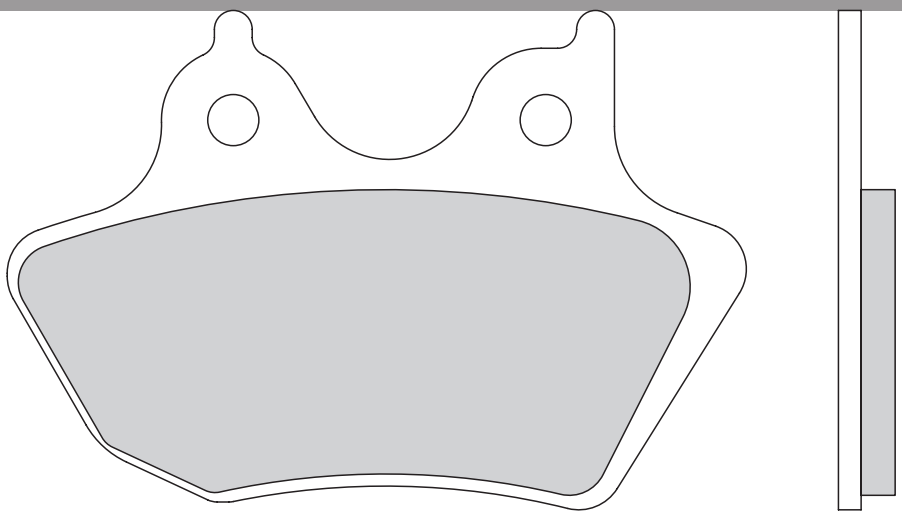

mm 97,6 x 64,2
8,0

A B

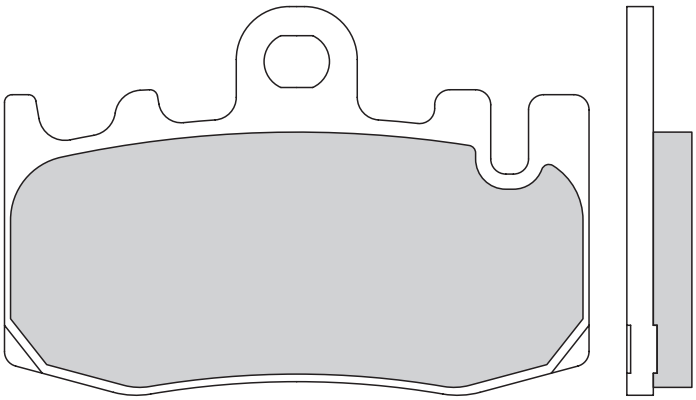

GALFER
FD
377
G1054
G1370

mm 77,3 x 51,4
8,5

A B

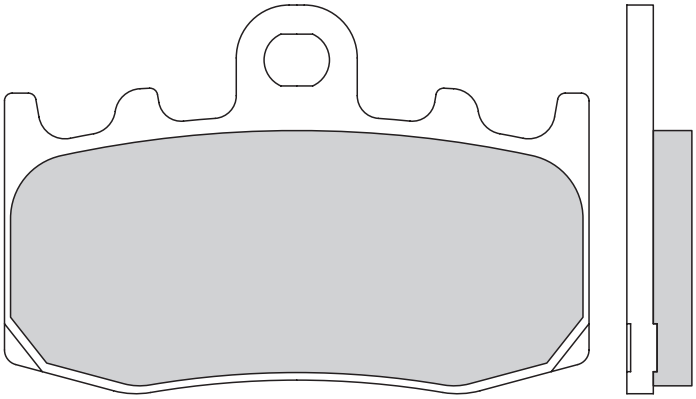

mm 77,3 x 51,4
8,5

A B

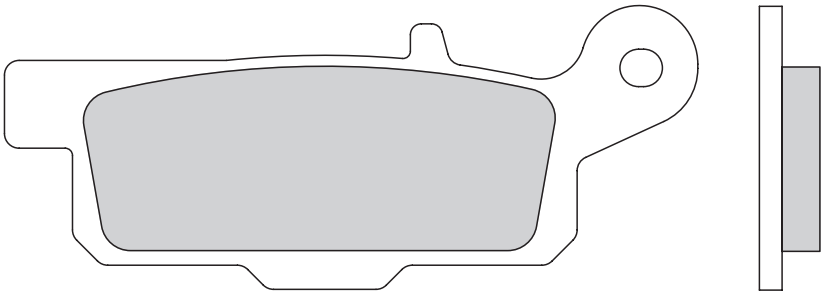

GALFER
FD
378
G1397

mm 91,7 x 38,2
8,0

mm 107,0 x 33,8
8,0

A B

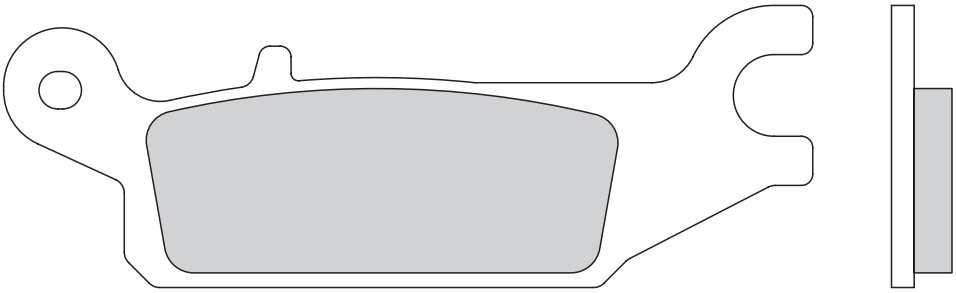

GALFER
## FD 379
## G1397

mm 91,7 x 38,2
8,0

A B

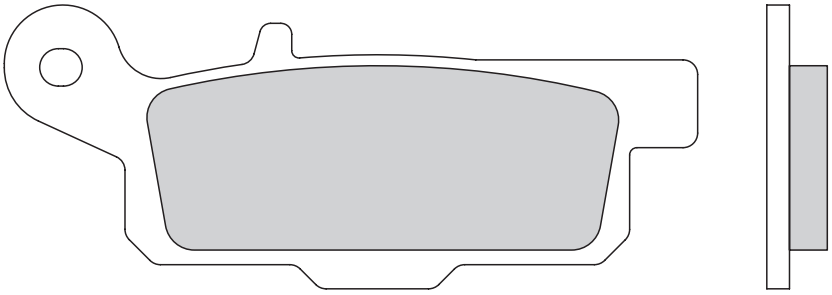

mm 107,0 x 33,8
8,0

A B

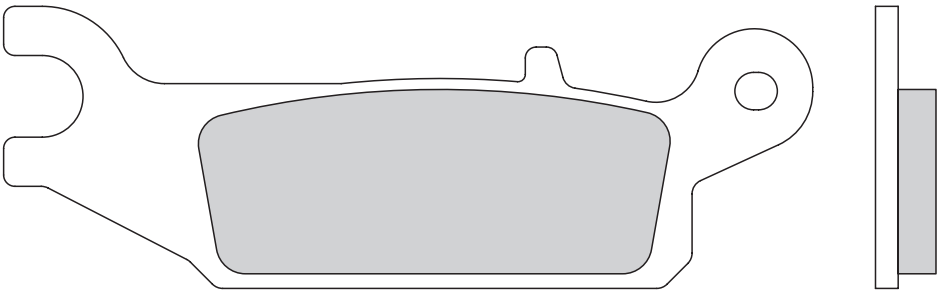

GALFER
## FD 380
## G1397

mm 91,7 x 38,2
9,0

A B

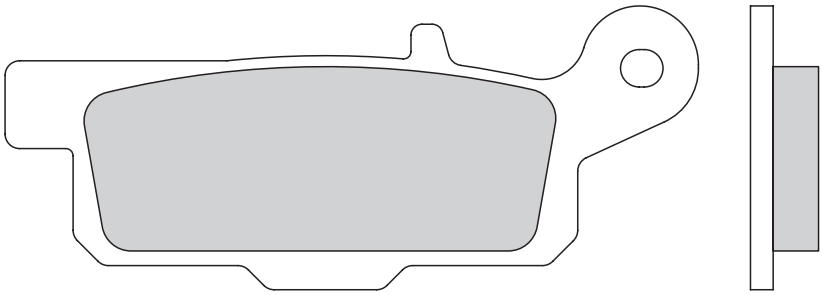

A | B

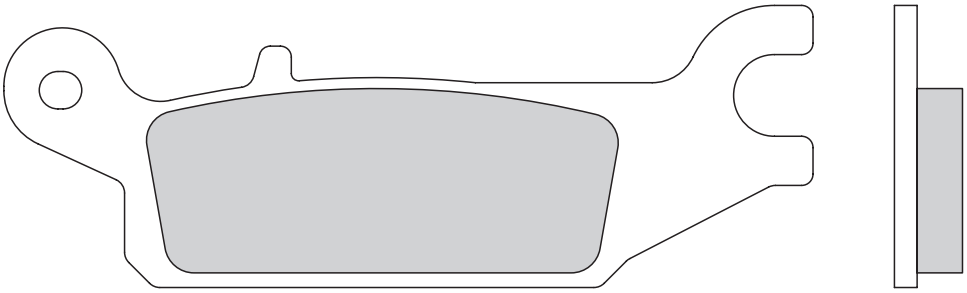

mm 107,0 x 33,8
9,0

A | B

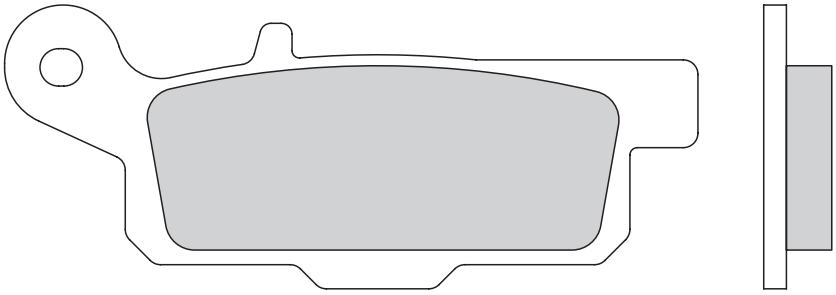

GALFER
FD
381
G1397

mm 91,7 x 38,2
9,0

A | B

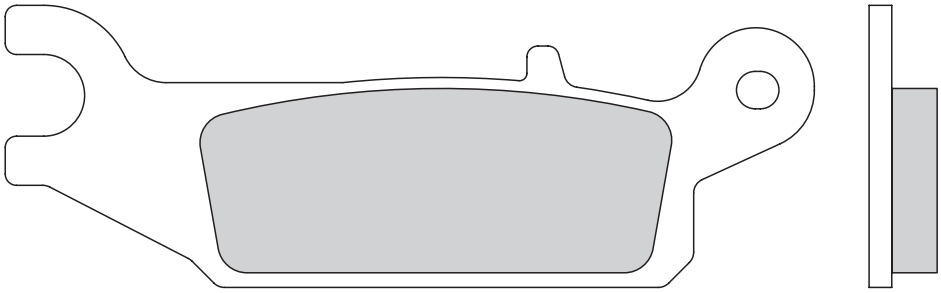

mm 107,0 x 33,8
9,0

A | A

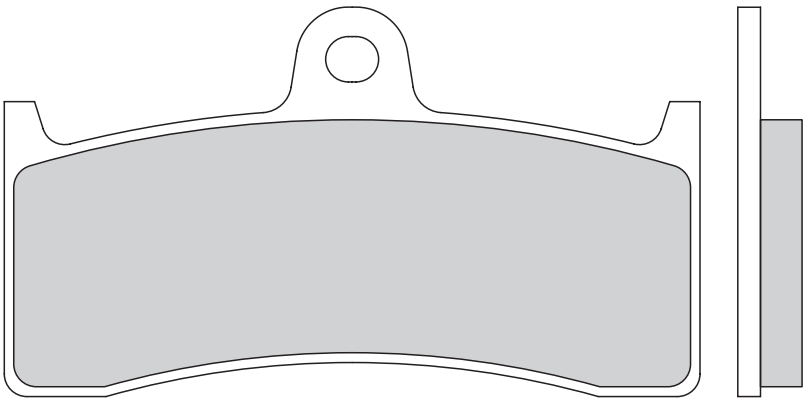

GALFER
FD
384
G1054
G1375

mm 92,0 x 51,5
8,0

## GALFER FD 391

G1054
G1003
G1300

mm 43,2 x 48,7
10,0

A A
4x

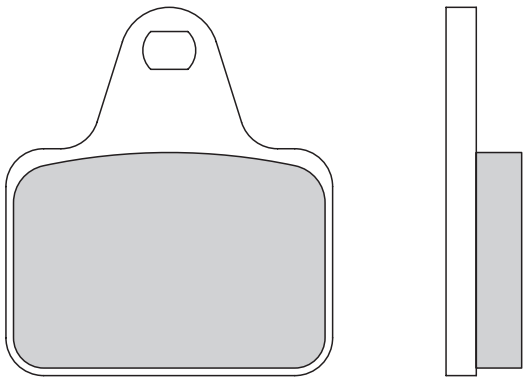

## GALFER FD 392

G1371

mm 49,7 x 36,0
8,0

A A

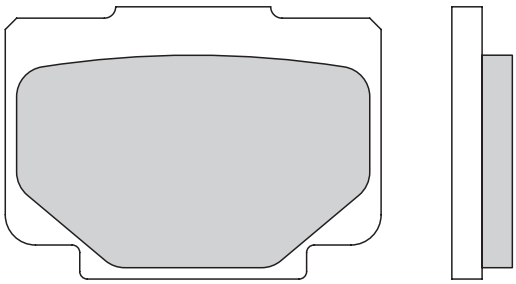

## GALFER FD 393

G1054
G1050
G1370

mm 95,6 x 36,9
8,4

mm 109,6 x 51,2
8,4

A B

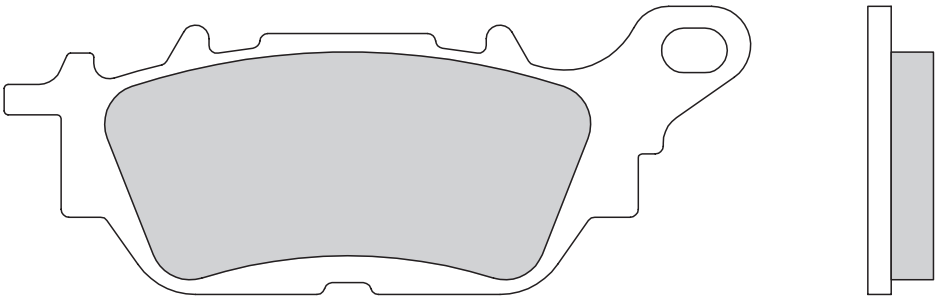

A B

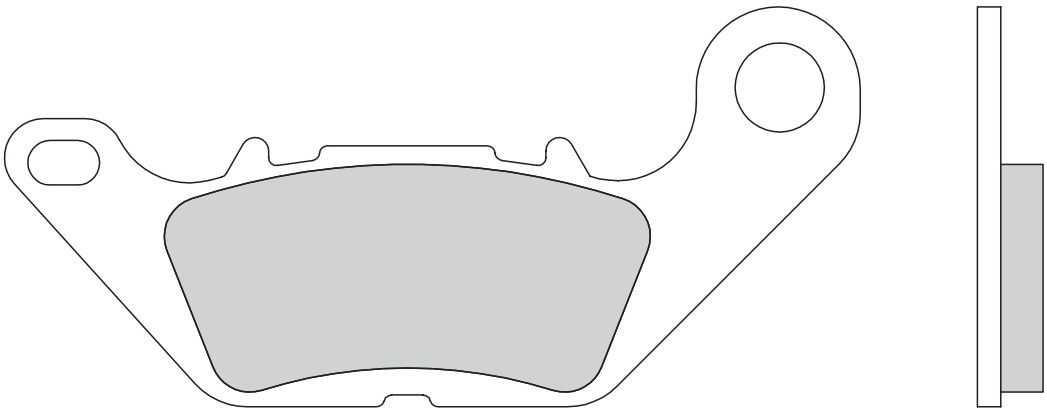



SEMI METAL → G1054 SCOOTER → G1050 TRIAL TOP → G1805 SINTERED → G1370-71 G1375 G1380-83 G1396 G1397 GP → G1003-G1300

A | A

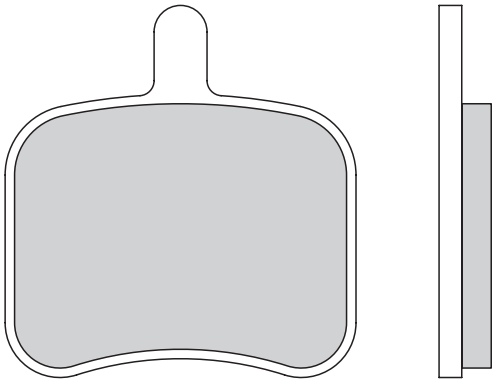

GALFER
**FD 398**

mm 46,4 x 49,2

6,9

A | A

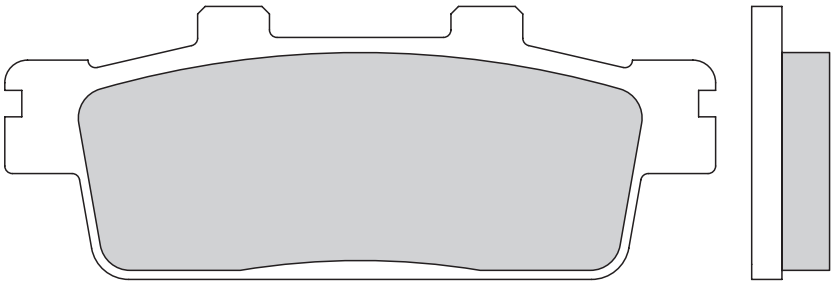

GALFER
**FD 399**
**G1054**
**G1050**
**G1380**

mm 94,0 x 36,1

10,1

A | B

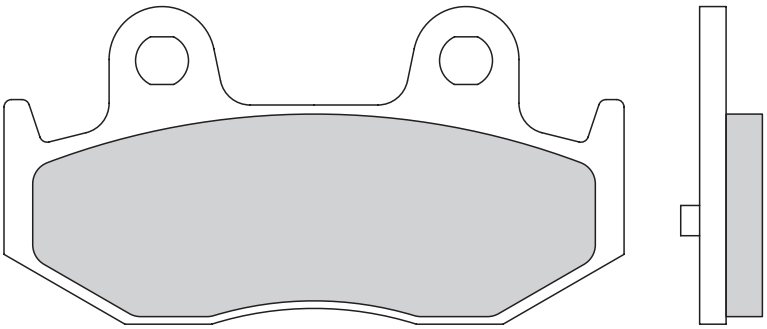

GALFER
**FD 400**
**G1380**

mm 81,0 x 42,0

8,3

A | B

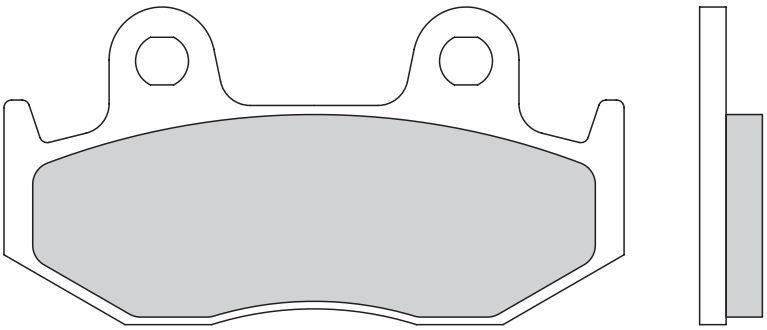

mm 81,0 x 42,0

8,3

## GALFER FD 401

G1054
G1380

| | |
|---|---|
| mm | 88,0 x 46,0 |
| | 8,4 |
| mm | 88,0 x 46,0 |
| | 8,4 |

A B

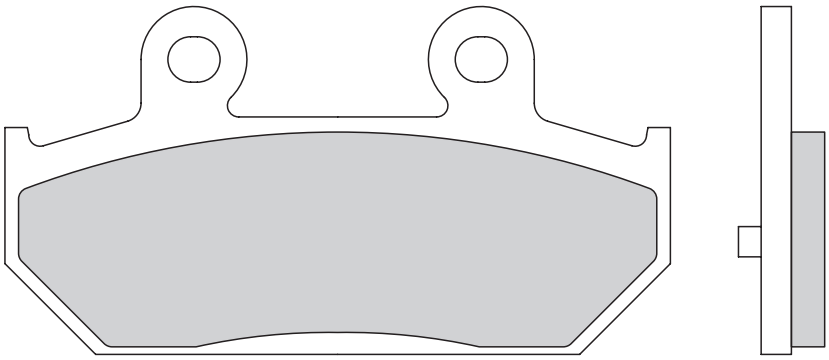

A B

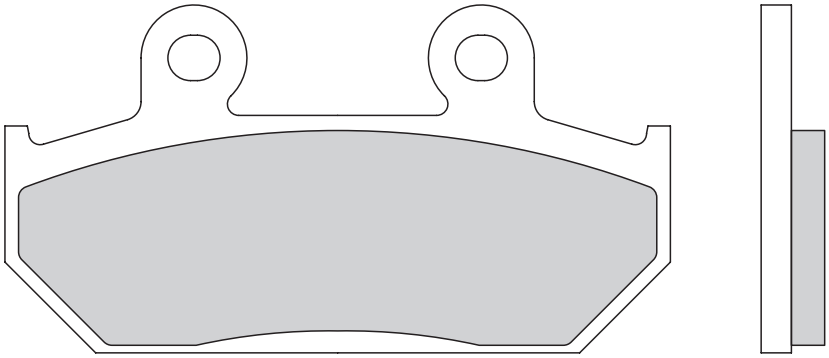

## GALFER FD 402

G1370
G1375

| | |
|---|---|
| mm | 92,0 x 49,5 |
| | 8,0 |

A A

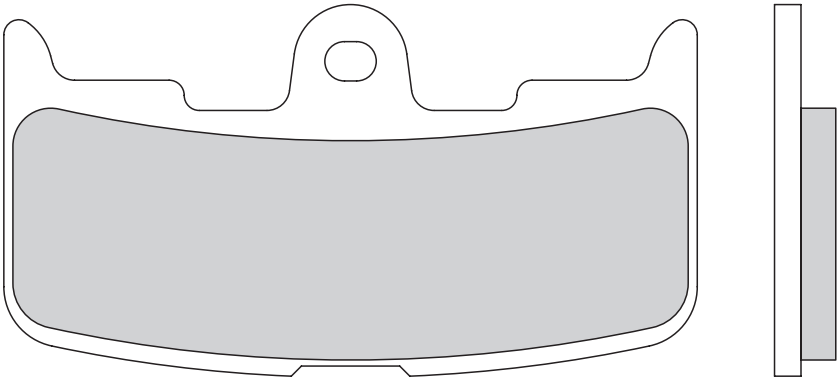

## GALFER FD 404

G1397

| | |
|---|---|
| mm | 97,1 x 46,8 |
| | 7,6 |

A A

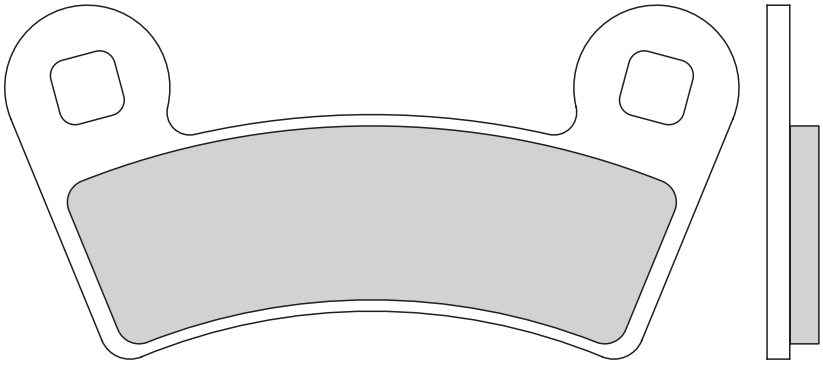



SEMI METAL → G1054 SCOOTER → G1050 TRIAL TOP → G1805 SINTERED → G1370-71 G1375 G1380-83 G1396 G1397 GP → G1003-G1300

A | A1

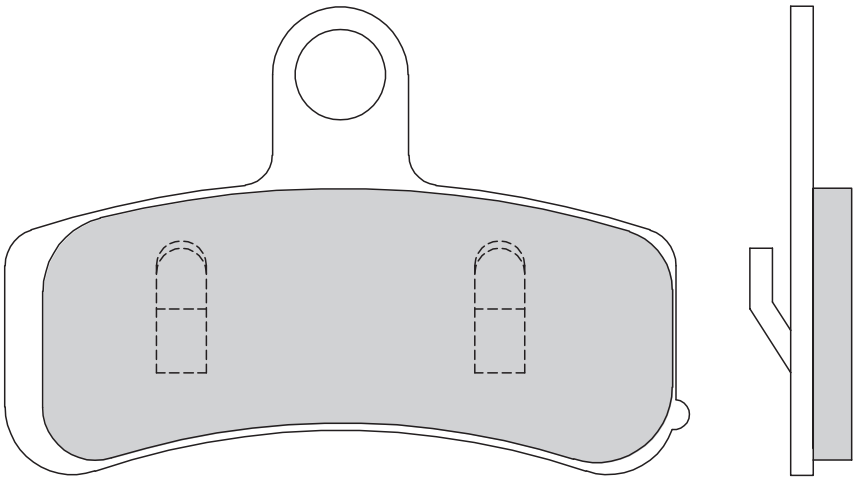

GALFER
**FD 405**
**G1370**

mm 90,6 x 62,0
13,5

A | A1

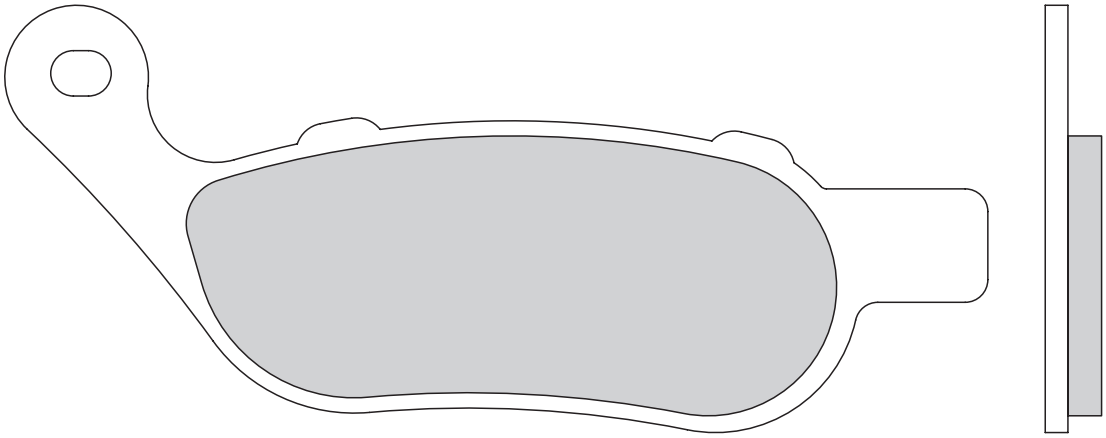

GALFER
**FD 406**
**G1371**

mm 127,5 x 52,6
7,4

A | A1

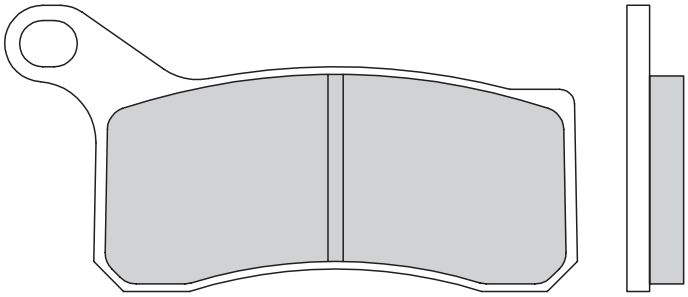

GALFER
**FD 407**
**G1397**

mm 76,5 x 38,2
7,5

A | A

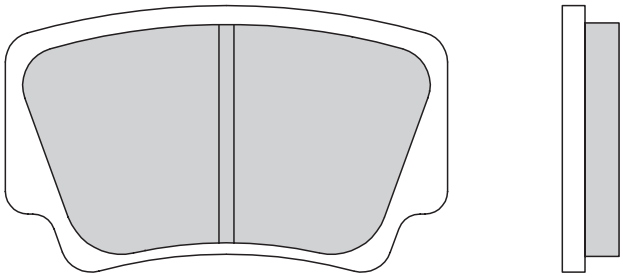

GALFER
**FD 408**
**G1397**

mm 58,7 x 35,4
8,4

## GALFER FD 409

G1054
G1396

mm 58,7 x 35,4
8,4

mm 111,2 x 36,1
7,6

A | B

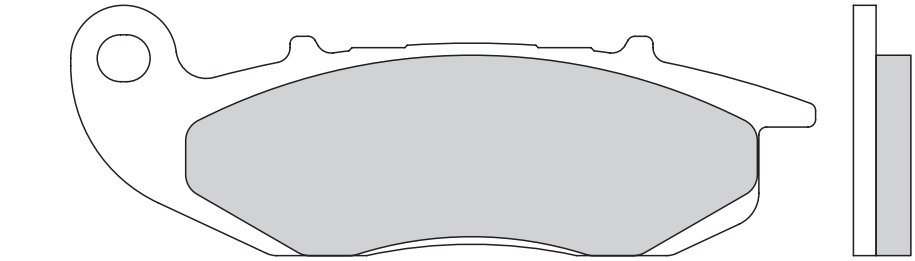

A | B

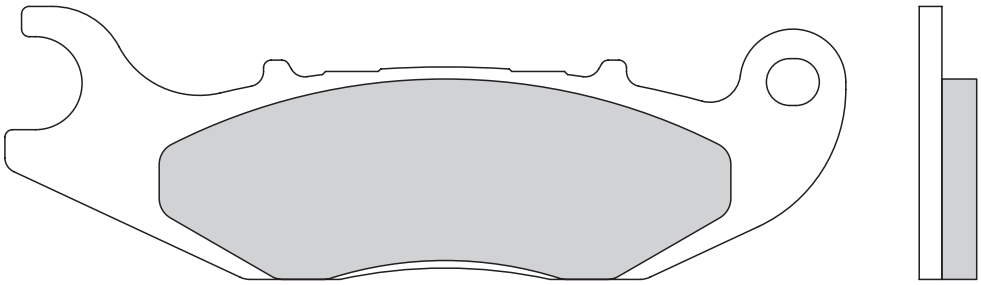

## GALFER FD 410

G1054
G1805

mm 50,0 x 47,2
5,25

A | A

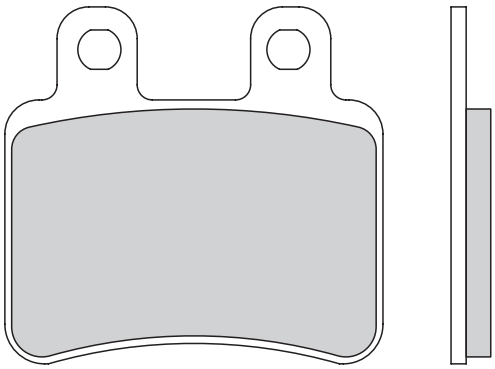

## GALFER FD 411

G1054

mm 58,7 x 35,4
8,4

A | A[1]

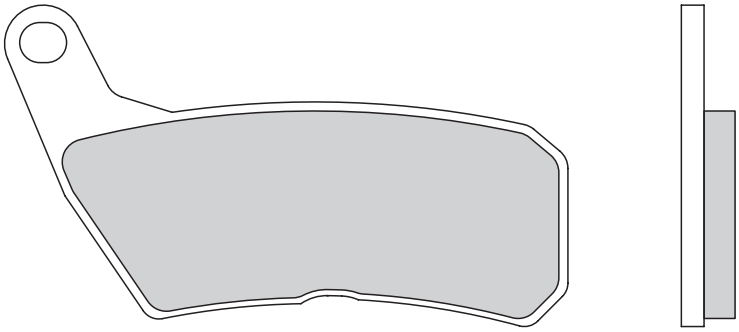



SEMI METAL → G1054 SCOOTER → G1050 TRIAL TOP → G1805 SINTERED → G1370-71 G1375 G1380-83 G1396 G1397 GP → G1003-G1300

A A

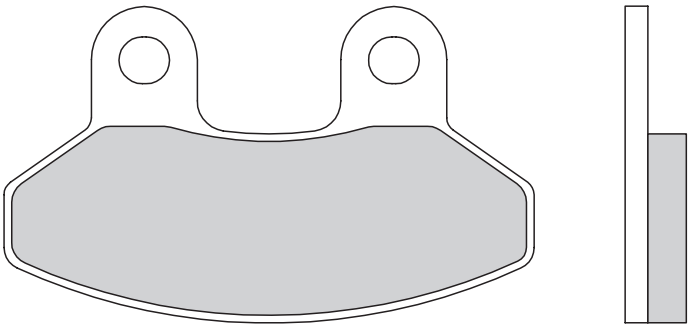

GALFER
**FD 412**
**G1380**

mm 70,0 x 42,0

8,0

A A

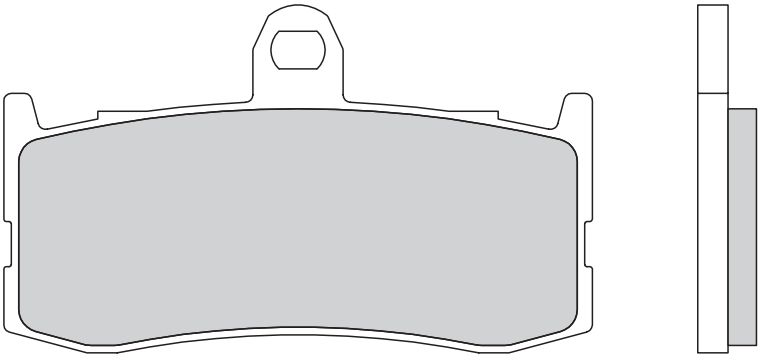

GALFER
**FD 414**
**G1375**

mm 78,1 x 46,2

7,8

A A

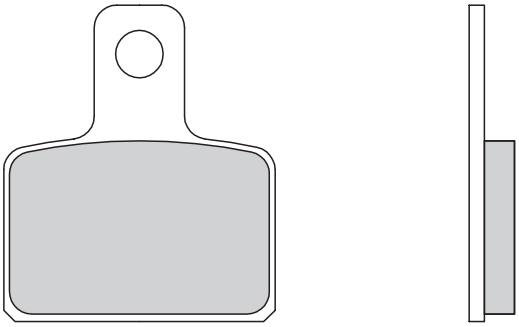

GALFER
**FD 428**
**G1805**

mm 36,0 x 42,0

6,0

A A
4x

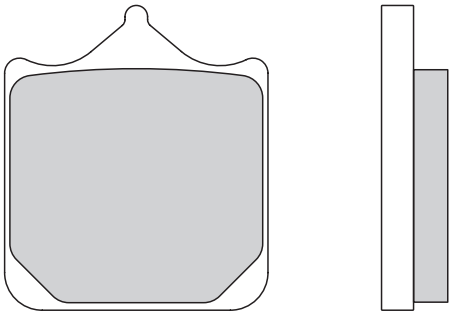

GALFER
**FD 437**
**G1375**
**G1300**

mm 35,0 x 40,5

9,0

**FD262** (th. 7,5mm) can replace **FD437** except for **BMW S 1000 RR** (not vice versa) | **FD262** (th. 7,5mm) puede sustituir **FD437** excepto para la **BMW S 1000 RR** (no al revés)

## GALFER FD 438

G1054
G1380

mm 90,0 x 33,3
9,8

A | A

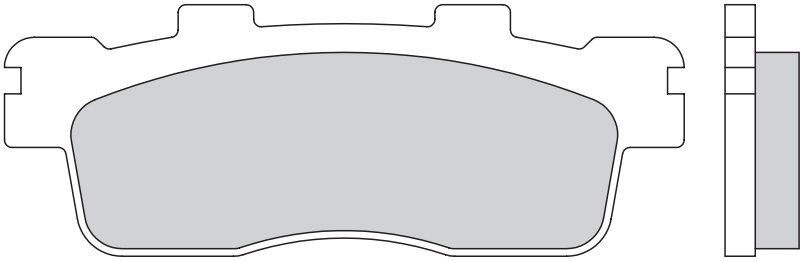

## GALFER FD 439

G1054
G1050
G1383

mm 108,6 x 41,0
8,0

A | B

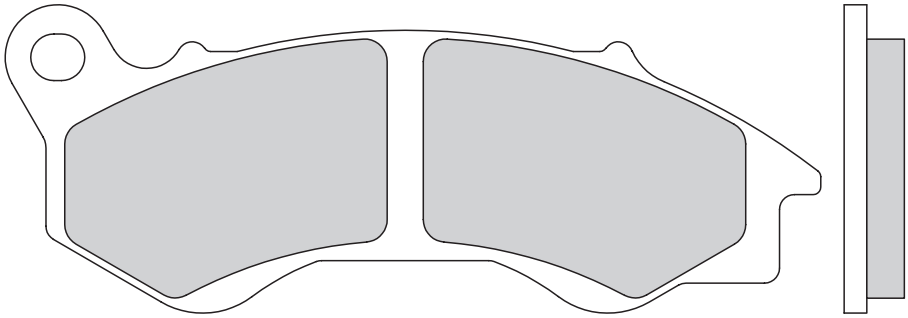

mm 111,2 x 45,0
8,0

A | B

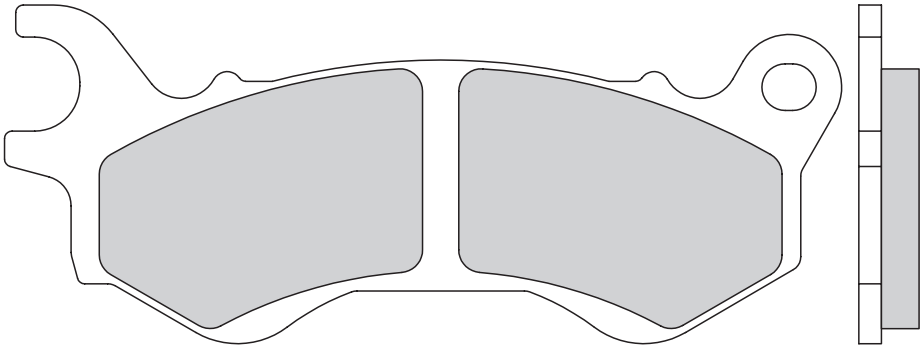

## GALFER FD 441

G1396

mm 41,0 x 42,3
7,3

A | A

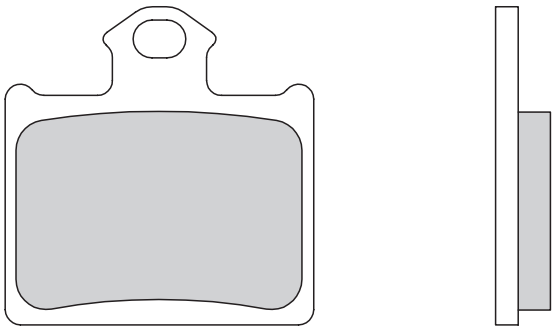

A | A
2x

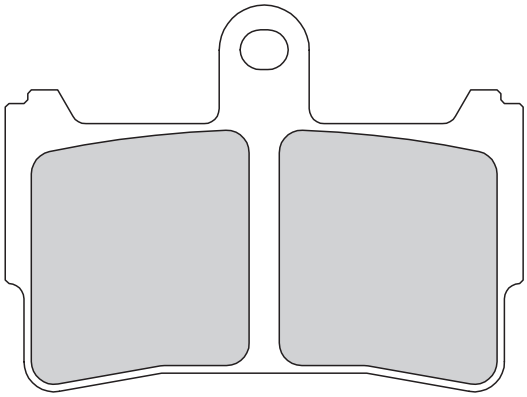

GALFER
**FD 442**
**G1375**

mm ↔ 69,0 x ↕ 51,4
9,0

A | A¹

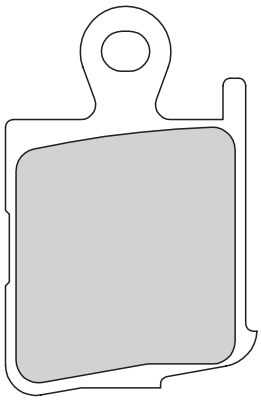

mm ↔ 33,0 x ↕ 51,7
9,0

A | A¹

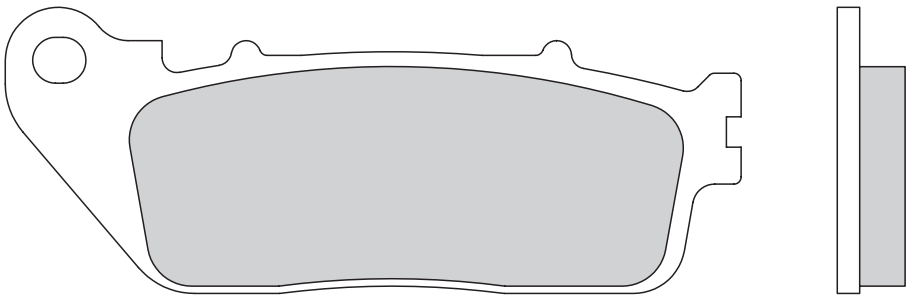

GALFER
**FD 443**
**G1371**

mm ↔ 99,4 x ↕ 38,0
9,0

A | A

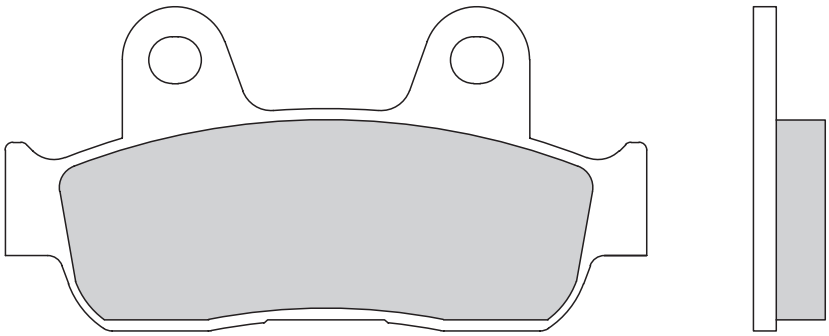

GALFER
**FD 444**
**G1383**

mm ↔ 85 x ↕ 43
9,5

## GALFER FD 446

G1054
G1805

mm 59 x 38,5
5,8

A | A

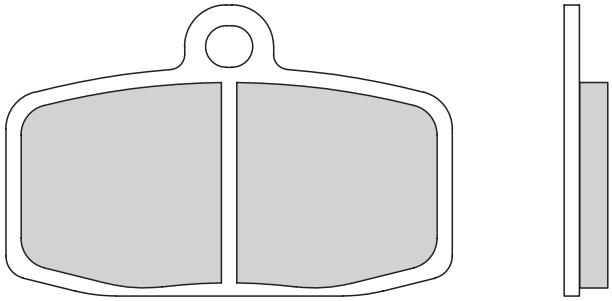

## GALFER FD 450

G1054

mm 69,5 x 45,2
8,8

A | A

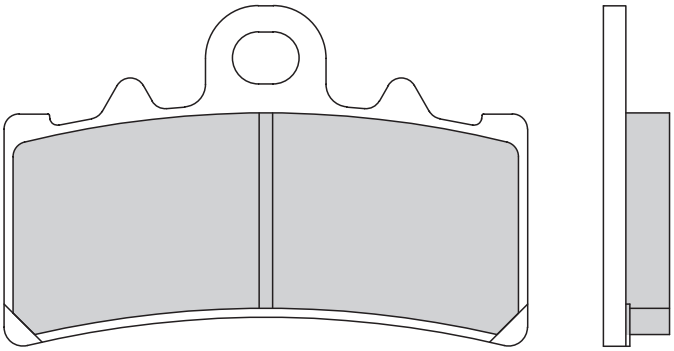

## GALFER FD 456

G1054

mm 66,9 x 36
9,0

A | A1

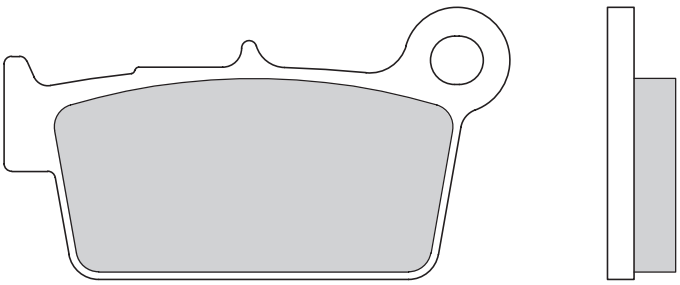

## GALFER FD 457

G1054

mm 86,2 x 40,2
9,0

A | A1

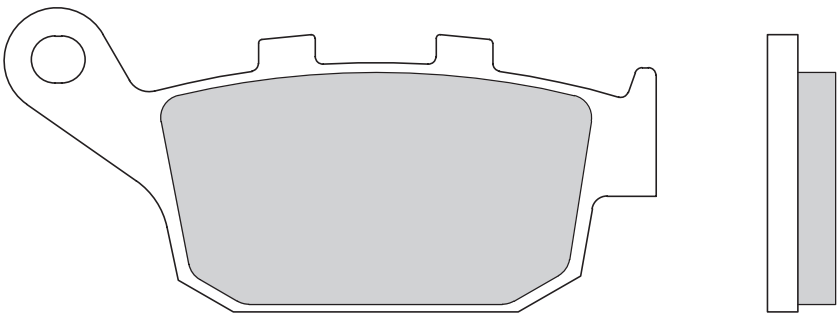

A | A

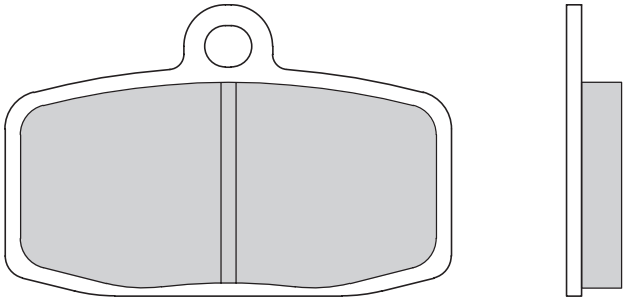

GALFER
**FD 458**
G1054
G1805
G1396

mm 59 x 38,5

7,3

A | A

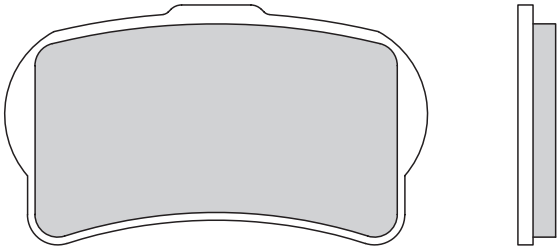

GALFER
**FD 460**
G1054
G1805

mm 56 x 31,8

5,0

A | B

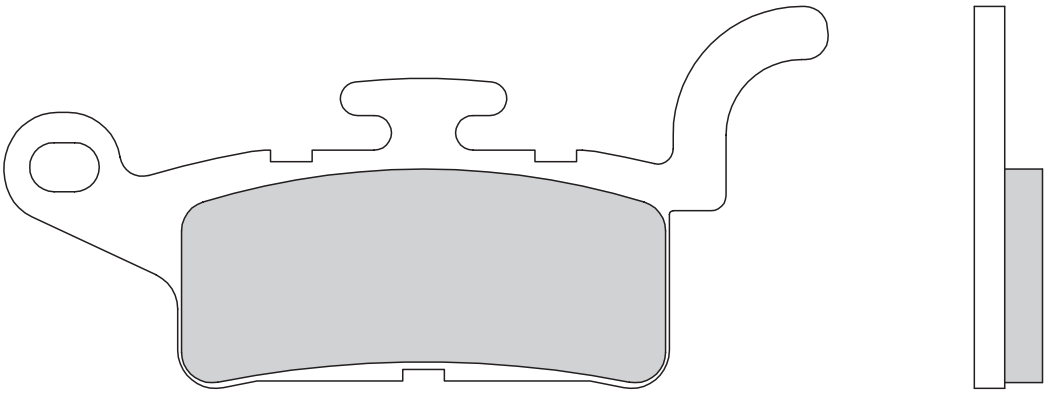

A | B

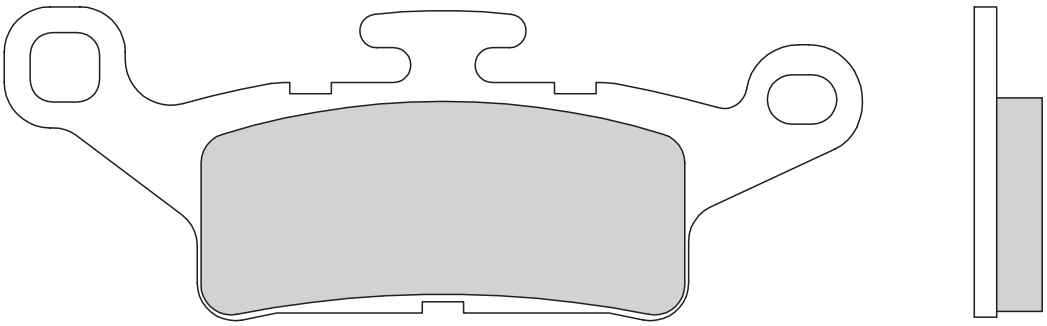

GALFER
**FD 473**
G1380

mm 109 x 50,5

9,0

mm 113,5 x 41

9,0

## GALFER FD 474 G1380

mm 94 x 36

10,5

A | A

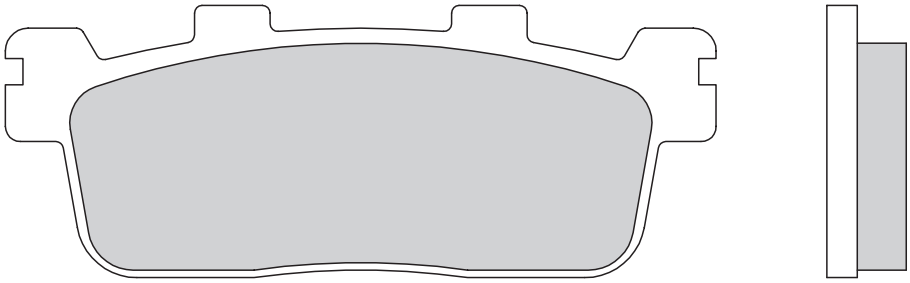

## GALFER FD 475 G1054 G1370 G1375 G1003

mm 84,9 x 51,3

8,0

A | A[1]

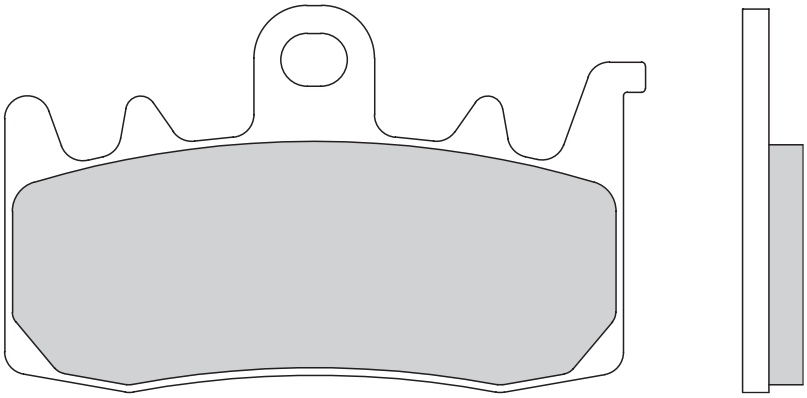

## GALFER FD 478 G1003

mm 82,0 x 28,7

9,5

A | A

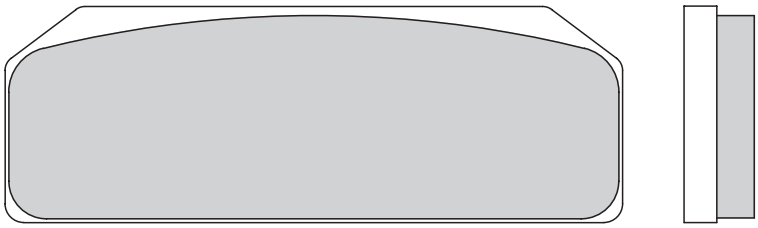

## GALFER FD 481 G1054

mm 72,5 x 53,3

8,0

A | A

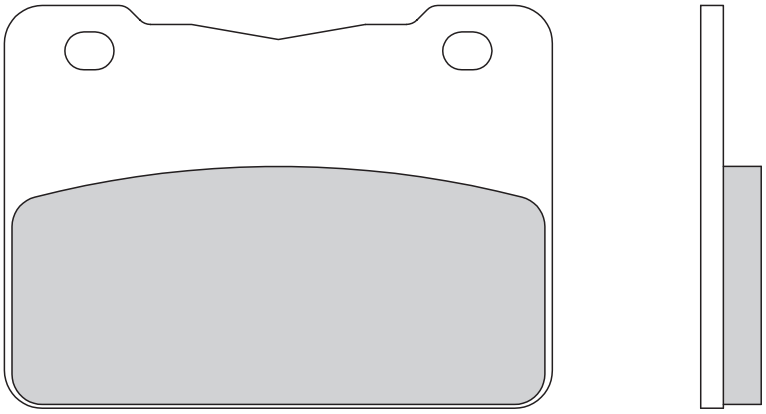



SEMI METAL → G1054 SCOOTER → G1050 TRIAL TOP → G1805 SINTERED → G1370-71 G1375 G1380-83 G1396 G1397 GP → G1003-G1300

A | A1

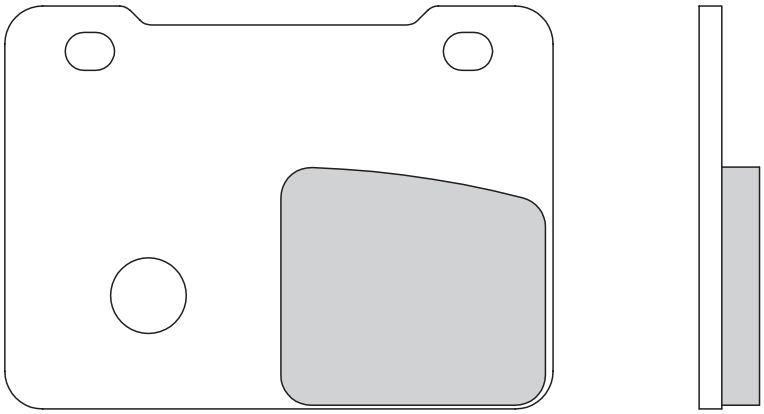

GALFER
**FD 482**
**G1054**

mm 72,5 x 53,3

8,0

A | B

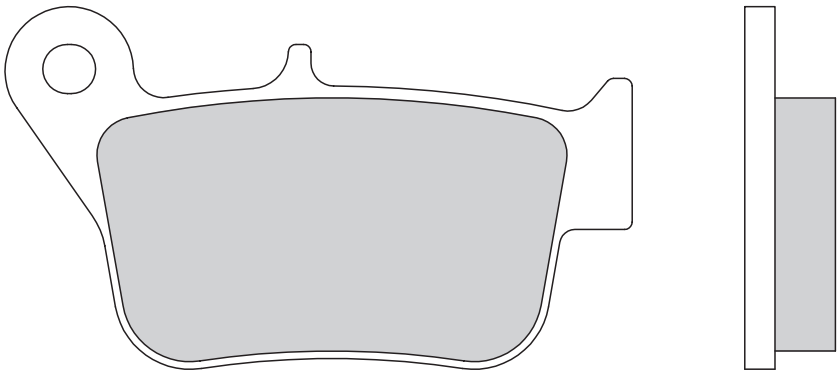

GALFER
**FD 483**
**G1054**

mm 83,0 x 48,5

12,0

A | B

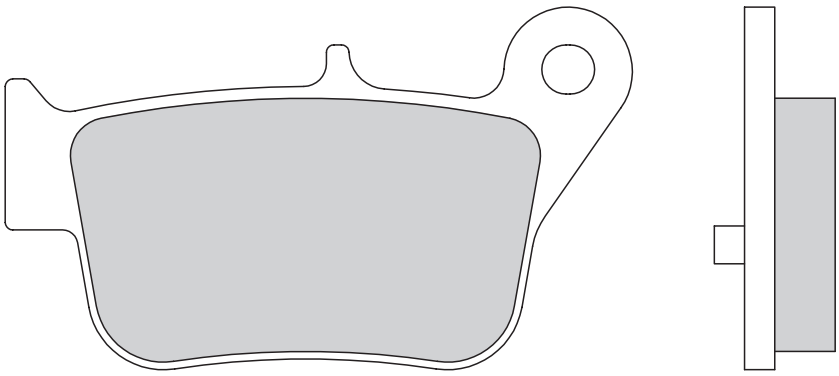

mm 83,0 x 48,5

12,0

A | B

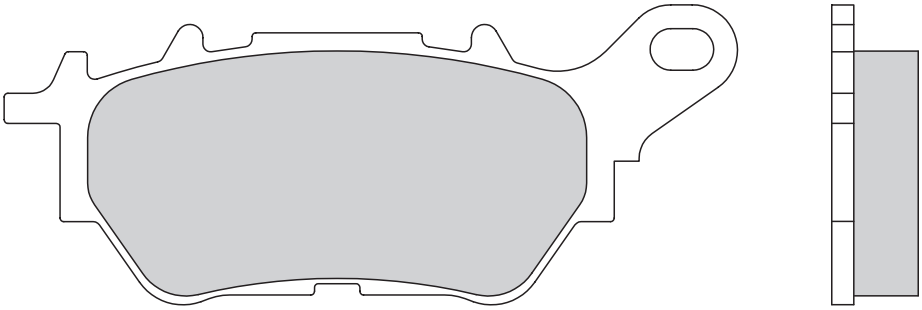

GALFER
**FD 484**
**G1054**

mm 97,0 x 39,7

11,5

mm 113,0 x 52,8
11,5

A B

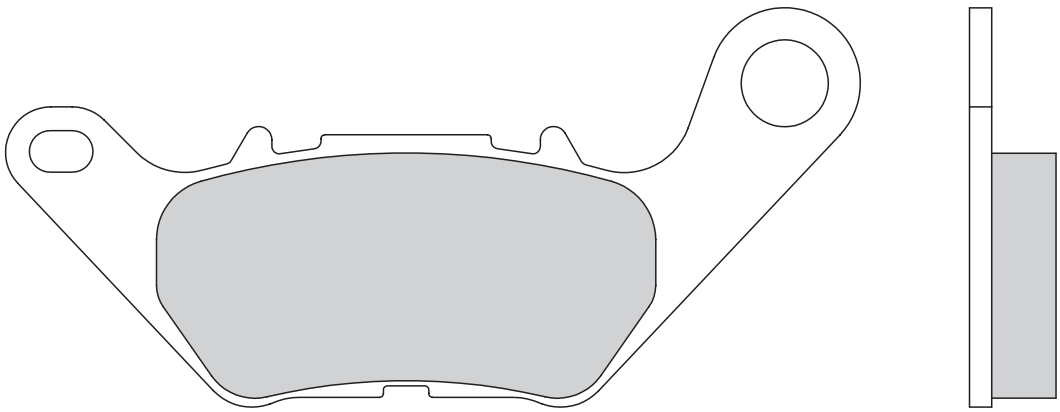

GALFER
## FD 485
## G1054

mm 99,0 x 44,8
8,5

A B

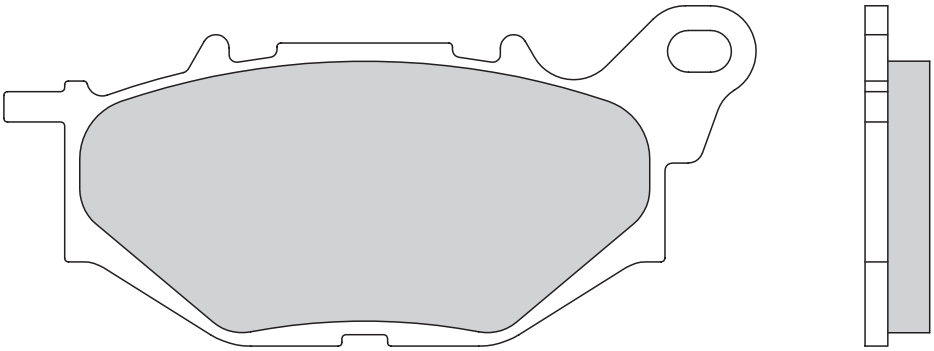

mm 113,3 x 54,9
8,5

A B

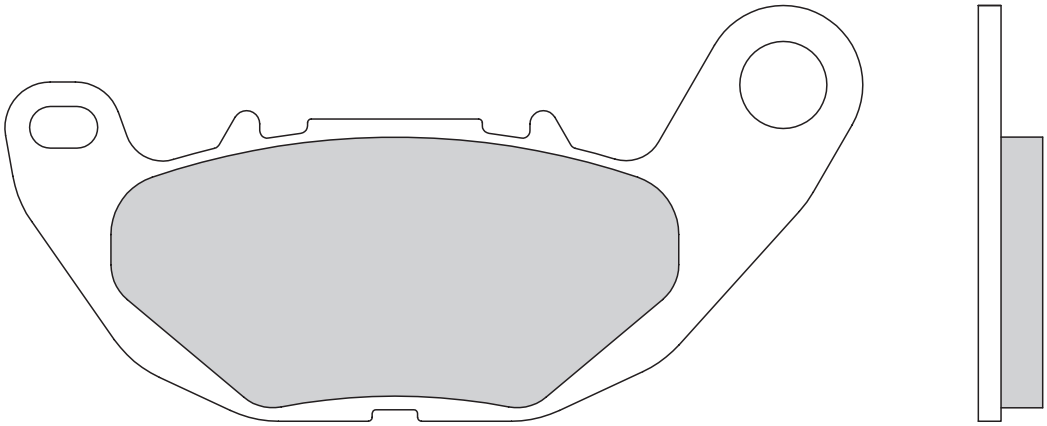

GALFER
## FD 486
## G1054

mm 69,7 x 42,6
7,3

A A

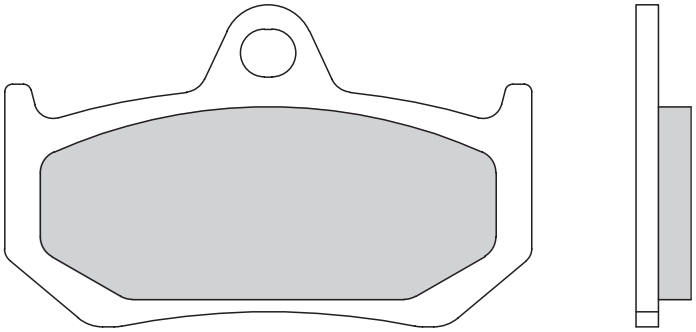

| Ref. | SEMI METAL | | TRIAL TOP | SINTERED | | | | | | GP | |
|---|---|---|---|---|---|---|---|---|---|---|---|
| | G1054 UNIVERSAL | G1050 SCOOTER | G1805 TRIAL | G1370 STREET (front) | G1371 STREET (rear) | G1375 SPORT | G1380-83 SCOOTER | G1396 OFF-ROAD | G1397 ATV / QUAD | G1003 RACING | G1300 RACING |
| FD008 | * | | | | | | | | | | |
| FD012 | * | * | * | | * | | | | | | |
| FD013 | * | | * | * | | | | | | | |
| FD016 | * | | | | | | | | | | |
| FD017 | * | | | | | | | | | | |
| FD022 | * | | | | | | | | | | |
| FD031 | * | | | | | | | | | | |
| FD042 | * | | | | | | | | | | |
| FD044 | * | | | | | | | | | | |
| FD045 | * | | | | | | | | | | |
| FD046 | * | | | | | | | | | | |
| FD047 | * | | | | | | | | | | |
| FD048 | * | * | * | | | | | | | | |
| FD051 | * | | | | | | | | | | |
| FD052 | * | | | | | | | | | | |
| FD054 | * | * | | * | | | | | | | |
| FD056 | * | | | | | | | | | | |
| FD057 | * | | | | * | | | | | | |
| FD060 | * | | | | | | | | | | |
| FD062 | * | | | * | | | | | | | |
| FD063 | * | * | * | | | | | | * | | |
| FD065 | * | * | * | | | | * | | | | |
| FD066 | * | | | * | | | | | | | |
| FD068 | * | * | | * | | * | | | | * | |
| FD069 | * | | | * | | | | | | | |
| FD070 | * | | | | | | | | | | |
| FD071 | * | | * | | | | | | | | |
| FD072 | * | | | | | | | | | | |
| FD073 | * | * | * | | | | | | | | |
| FD074 | * | * | * | * | | | | | | | |
| FD075 | * | * | * | | | | | * | | | |
| FD076 | * | | * | | | | | * | * | | |
| FD078 | * | | | | | | | | | | |
| FD079 | * | * | * | * | | | | | | | |
| FD080 | * | | | | | | | | | | |
| FD081 | * | | | | | | | | | | |
| FD082 | * | | | * | | | | | | | |
| FD083 | * | | | | | | | | | | |
| FD084 | * | * | * | | | | | | | | |
| FD085 | * | * | | | | | | | | | |
| FD086 | * | | * | * | | | | * | * | | |
| FD087 | * | | | * | | | | | | | |
| FD089 | * | | | | | | | | | | |
| FD090 | * | | | * | | | | | | | |
| FD091 | * | | | | | | | * | | | |
| FD092 | * | | * | | | | | * | | | |
| FD093 | * | | * | | | | | * | | | |
| FD094 | * | * | * | | | | | * | | | |
| FD095 | * | * | * | | | | | * | * | | |
| FD096 | * | | | * | | | | | | | |
| FD097 | * | * | * | | | | | | | | |
| FD098 | * | | | | | | | | | | |
| FD099 | * | | | * | | * | | | | | |
| FD100 | * | | | | | | | | | | |
| FD101 | * | | | | | | | | | | |
| FD102 | * | | * | | | | | | | | |
| FD103 | * | | * | | * | | | | | | |
| FD104 | * | | | | | | | | | | |
| FD107 | * | | | * | | * | | | | * | * |
| FD109 | * | | * | | | | | | | | |
| FD110 | * | | * | | | | | | | | |
| FD111 | * | | * | | * | | | | | | |
| FD113 | * | * | | | | | | | | | |
| FD114 | * | | * | | | | | * | | | |
| FD115 | * | | | | | | | | | | |
| FD117 | * | * | * | * | | | | | * | | |
| FD118 | * | * | | * | | | | | | | |
| FD119 | * | | | | | | | | | | |
| FD120 | * | | * | | | | | | | | |
| FD121 | * | | | * | | | | | | | |
| FD122 | * | | * | | | | | | | | |

| Ref. | SEMI METAL | | TRIAL TOP | SINTERED | | | | | | GP | |
|---|---|---|---|---|---|---|---|---|---|---|---|
| | G1054 UNIVERSAL | G1050 SCOOTER | G1805 TRIAL | G1370 STREET (front) | G1371 STREET (rear) | G1375 SPORT | G1380-83 SCOOTER | G1396 OFF-ROAD | G1397 ATV / QUAD | G1003 RACING | G1300 RACING |
| FD123 | * | | * | | | | | | | | |
| FD124 | * | | | | | | | | | | |
| FD125 | * | | | | | | | | | | |
| FD126 | * | | | | | | | | | | |
| FD127 | * | | | | | | | | | | |
| FD128 | * | | * | | | | | | | | |
| FD129 | * | * | * | | | | | | | | |
| FD130 | * | | | | | | | | | | |
| FD131 | * | | | | | | | | | | |
| FD132 | * | | | | | | | | | | |
| FD133 | * | * | * | | | | * | | | | |
| FD134 | * | | | | * | | | | | | |
| FD135 | * | * | | | | | | | | | |
| FD136 | * | * | | | | | | | | | |
| FD137 | * | | | | | | | | | | |
| FD138 | * | * | * | * | | | * | * | | | |
| FD140 | * | * | | * | | | | | | | |
| FD141 | * | | | | | | | | | | |
| FD142 | * | * | | * | | | * | | | | |
| FD143 | * | | | * | | | | | | | |
| FD144 | * | * | | | | | | | | | |
| FD145 | * | * | | | | | * | | | | |
| FD147 | * | * | | | | | | | | | |
| FD148 | * | | | * | | * | | | | | |
| FD149 | * | * | | | | | | | | | |
| FD151 | * | * | * | | | | | | | | |
| FD152 | * | * | | | | | | | | | |
| FD153 | * | * | | | | | * | | | | |
| FD154 | * | | | | | | | | | | |
| FD155 | * | | | | | | | | | | |
| FD156 | * | | | * | | * | | | | * | * |
| FD157 | * | | | | | | | | | | |
| FD158 | * | | | | | | | | | | |
| FD159 | * | | * | | | | | | | | |
| FD160 ** | * | | | | | | | | | | |
| FD161 ** | * | | | | | | | | | | |
| FD162 | * | | | | | | * | | | | |
| FD163 | * | | * | | | | | | | | |
| FD164 | * | | * | | | | | * | | | |
| FD165 | * | | * | | * | | | * | | | |
| FD166 | * | * | | | | | | | | | |
| FD167 | * | | | | * | | | | | | |
| FD168 | * | | | | | * | | | | * | * |
| FD169 | * | * | | * | | * | * | | | | |
| FD170 | * | * | * | | | | | | | | |
| FD171 | * | * | | | | | | | | | |
| FD172 | * | | | * | | | | | | | |
| FD174 | * | | | * | | * | | | | | * |
| FD175 | * | * | | | | | | | | | |
| FD176 | * | | | * | | * | | | | | * |
| FD177 | * | * | | | | | | | | | |
| FD178 | * | | | * | | * | * | | | * | * |
| FD179 | * | | | * | | * | | | | | |
| FD180 | * | | | | | | | | | | |
| FD181 | * | | * | | | | | | | | |
| FD182 | * | | | | | | | | | | |
| FD184 | * | | | | | | | | | | |
| FD186 | * | | | | * | | | | | | |
| FD187 | * | * | | | | | * | | | | |
| FD188 | * | * | | | | | * | | | | |
| FD189 | * | | | | | | | | | | |
| FD190 | * | | | | | | | | | | |
| FD193 | * | | | | | * | | | | | |
| FD195 | * | * | | | | | | | | | |
| FD197 | * | | | | | | | | | | |
| FD198 | * | | | * | | | | | | | |
| FD200 | * | * | | | | | * | | | | |
| FD204 | * | | | | | | | * | | | |
| FD205 | * | | | | | * | * | | | | |
| FD206 | * | * | | | | | * | | | | |
| FD207 | * | * | | * | | | * | | | | |

| Ref. | SEMI METAL | | TRIAL TOP | SINTERED | | | | | | GP | |
|---|---|---|---|---|---|---|---|---|---|---|---|
| | G1054 UNIVERSAL | G1050 SCOOTER | G1805 TRIAL | G1370 STREET (front) | G1371 STREET (rear) | G1375 SPORT | G1380-83 SCOOTER | G1396 OFF-ROAD | G1397 ATV / QUAD | G1003 RACING | G1300 RACING |
| FD209 | * | * | | | | | | | | | |
| FD210 | * | | * | | | | | | | | |
| FD214 | * | * | | | * | | * | | | | |
| FD218 | * | | | | | | | | | | |
| FD219 | * | | | * | | * | | | | * | * |
| FD220 | * | * | | | * | | * | | | | |
| FD221 | * | | | | | | | | | | |
| FD222 | * | * | | | | | * | | | | |
| FD223 | * | | * | | | | | | | | |
| FD224 | * | * | * | | | | | | | | |
| FD225 | * | * | * | | | | | | | | |
| FD226 | * | | | | | | | | | | |
| FD228 | * | * | | | | | * | | | | |
| FD230 | * | | | | | | | * | | | |
| FD232 | * | * | | | | | | | | | |
| FD233 | * | | | | | | | | | | |
| FD234 | * | * | | | | | | | | | |
| FD235 | * | | | * | | | | | | | |
| FD238 | * | | * | | | | | | | | |
| FD239 | * | | * | | | | | | | | |
| FD245 | * | * | | | | | * | | | | |
| FD251 | * | | | | | | | | | | |
| FD252 | * | * | | | | | | | | | |
| FD254 | * | | | | | | | * | | | |
| FD259 | * | * | | | | | | | | | |
| FD260 | * | * | | | | | * | | | | |
| FD261 | * | * | | | | | | | * | | |
| FD262 * | * | | | * | | * | | | | | * |
| FD263 | * | | | | | | | | | | |
| FD264 | * | | | | | | | | | | |
| FD265 | * | | | | | | | * | | | |
| FD266 | * | * | | * | | * | * | | | | |
| FD267 | * | | | | * | | | | | | |
| FD268 | * | | | | | | | | | | |
| FD270 | * | * | | | | | * | | | | |
| FD271 | * | | | * | | * | | | | | |
| FD272 | * | | | * | | | | | | | |
| FD275 | * | * | | | | | * | | * | | |
| FD276 | * | | | | | | | | | | |
| FD277 | * | * | | | | | * | | | | |
| FD278 | * | | | | | | | * | | | |
| FD279 | * | | | | | | | | | | |
| FD284 | * | * | | | | | * | | | | |
| FD286 | * | | | | | | | * | | | |
| FD290 * | * | | | * | | * | | | | | * |
| FD291 | * | | | | | | | * | | | |
| FD295 | * | | | | * | | | | | | |
| FD296 | * | | | | | | | | | | |
| FD297 | * | * | | | | | | | | | |
| FD298 | * | * | | | | | | | | | |
| FD299 | * | | | | | | | | | | |
| FD300 | * | | | | | | | | * | | |
| FD301 | * | | | | | | | | * | | |
| FD302 | | | | | | | | | * | | |
| FD303 | * | | | | | | | | * | | |
| FD304 * | * | | | | | * | | | | | |
| FD315 | * | * | | | | | | | * | | |
| FD317 | | | | | | | | | * | | |
| FD318 | * | | | | | | | | * | | |
| FD319 | | | | | | | | | * | | |
| FD321 | | | | | | | | | * | | |
| FD323 | * | | | | | | | | * | | |
| FD325 | * | | | * | | * | | | | * | |
| FD326 | * | | | * | | * | | | | * | * |
| FD329 | * | | | | * | | | | | | |
| FD331 | * | | | * | | * | | | | | * |
| FD334 | * | * | | | | | * | | | | |
| FD335 | * | | * | | | | | | | | |
| FD336 | * | | | | | | | | * | | |
| FD339 | | | | * | | | | | | | |
| FD340 | | | | | * | | | | | | |

| Ref. | SEMI METAL | | TRIAL TOP | SINTERED | | | | | | GP | |
|---|---|---|---|---|---|---|---|---|---|---|---|
| | G1054 UNIVERSAL | G1050 SCOOTER | G1805 TRIAL | G1370 STREET (front) | G1371 STREET (rear) | G1375 SPORT | G1380-83 SCOOTER | G1396 OFF-ROAD | G1397 ATV / QUAD | G1003 RACING | G1300 RACING |
| FD341 | * | * | | | | | | | | | |
| FD342 | * | * | | | | | | | | | |
| FD343 | * | * | | | | | * | | | | |
| FD344 | * | * | | * | | * | * | | | | |
| FD345 | * | * | | | | | * | | | | |
| FD346 | * | | | | | | | | | | |
| FD351 | * | | | | | | | | | | |
| FD352 | * | | | | | | * | | | | |
| FD353 | * | | | | | | | | * | | |
| FD355 | * | * | | | | | * | | | | |
| FD359 | * | | | | * | | | | | | |
| FD360 | * | | | | | | | | | | |
| FD362 | * | | | | | | | * | | | |
| FD363 | * | | | | * | | | | | | |
| FD364 | * | | | | | | | * | | | |
| FD365 * | | | | | | * | | | | | * |
| FD367 | * | | | | | * | | | | | |
| FD369 | | | | * | | | | | | | |
| FD371 * | | | | * | | * | | | | * | * |
| FD372 * | | | | * | | * | | | | | |
| FD373 | | | | * | | * | | | | * | * |
| FD374 | * | | | | | | | | | | |
| FD375 | * | | | | | | | | | | |
| FD377 | * | | | * | | | | | | | |
| FD378 | | | | | | | | | * | | |
| FD379 | | | | | | | | | * | | |
| FD380 | | | | | | | | | * | | |
| FD381 | | | | | | | | | * | | |
| FD384 | * | | | | | * | | | | | |
| FD391 * | * | | | | | | | | | * | * |
| FD393 | * | * | | * | | | | | | | |
| FD399 | * | * | | | | | * | | | | |
| FD400 | * | | | | | | * | | | | |
| FD401 | * | | | | | | * | | | | |
| FD402 | | | | * | | * | | | | | |
| FD404 | | | | | | | | | * | | |
| FD405 | | | | * | | | | | | | |
| FD406 | | | | | * | | | | | | |
| FD407 | | | | | | | | | * | | |
| FD408 | | | | | | | | | * | | |
| FD409 | * | | | | | | | | * | | |
| FD410 | * | | * | | | | | | | | |
| FD411 | * | | | | | | | | | | |
| FD412 | | | | | | | * | | | | |
| FD414 | | | | | | * | | | | | |
| FD428 | | | * | | | | | | | | |
| FD437 * | | | | | | * | | | | | * |
| FD438 | * | | | | | | * | | | | |
| FD439 | * | * | | | | | * | | | | |
| FD441 | | | | | | | | * | | | |
| FD442 * | | | | | | * | | | | | |
| FD443 | | | | | * | | | | | | |
| FD444 | | | | | | | * | | | | |
| FD446 | * | | * | | | | | | | | |
| FD450 | * | | | | | | | | | | |
| FD456 | * | | | | | | | | | | |
| FD457 | * | | | | | | | | | | |
| FD458 | * | | | | | | | | | | |
| FD460 | * | | * | | | | | | | | |
| FD473 | | | | | | | * | | | | |
| FD474 | | | | | | | * | | | | |
| FD475 | * | | | * | | * | | | | * | |
| FD478 | | | | | | | | | | * | |
| FD481 | * | | | | | | | | | | |
| FD482 | * | | | | | | | | | | |
| FD483 | * | | | | | | | | | | |
| FD484 | * | | | | | | | | | | |
| FD485 | * | | | | | | | | | | |
| FD486 | * | | | | | | | | | | |

* 4 units/set
** 6 units/set

GALFER MOTO

# DF

## BRAKE DISCS
## DISCOS DE FRENO
## DISCHI DI FRENO
## DISQUES DE FREIN

## GALFER DF 003 W

OE

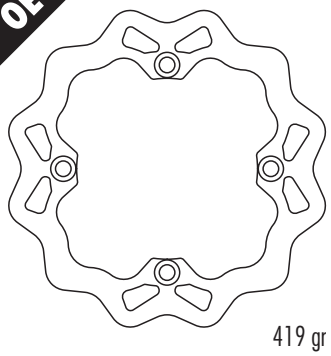

øext. 220 mm
øint. 122
4,0
419 gr

## GALFER DF 007 WS

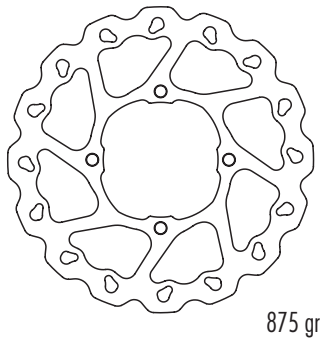

øext. 280 mm
øint. 105
4,0
SP035
875 gr

## GALFER DF 013 W

OE

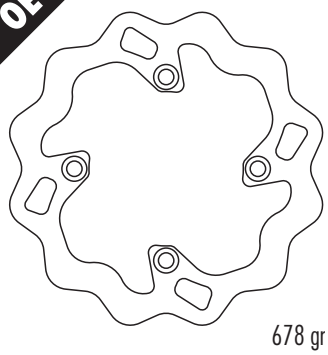

øext. 220 mm
øint. 105
5,0
678 gr

## GALFER DF 004 W

OE

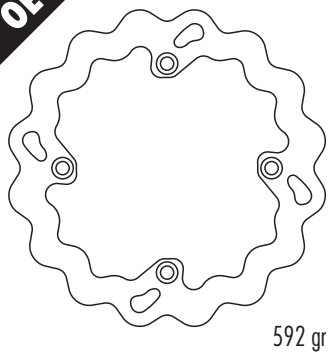

øext. 256 mm
øint. 144
4,0
592 gr

## GALFER DF 009 W

OE

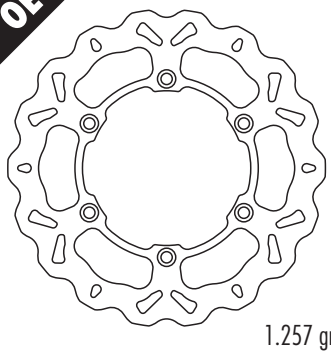

øext. 296 mm
øint. 144
5,0
1.257 gr

## GALFER DF 014 W

OE

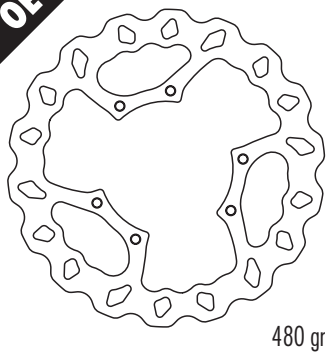

øext. 240 mm
øint. 101
3,0
480 gr

## GALFER DF 005 W

OE

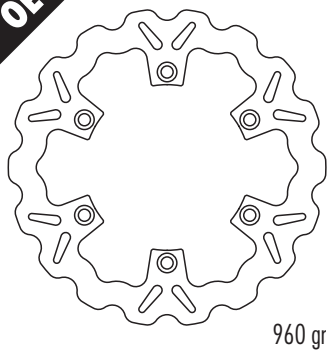

øext. 276 mm
øint. 144
5,0
960 gr

## GALFER DF 010 W

OE

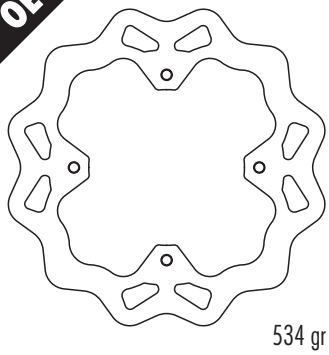

øext. 220 mm
øint. 105
4,0
534 gr

## GALFER DF 014 FLW

OE

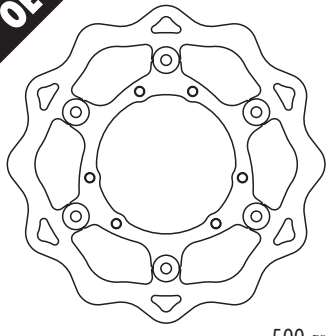

øext. 240 mm
øint. 101
3,0
500 gr

## GALFER DF 006 W

OE

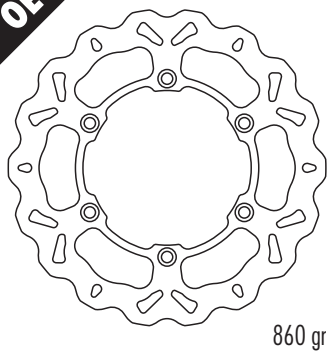

øext. 296 mm
øint. 144
4,0
860 gr

## GALFER DF 011 W

OE

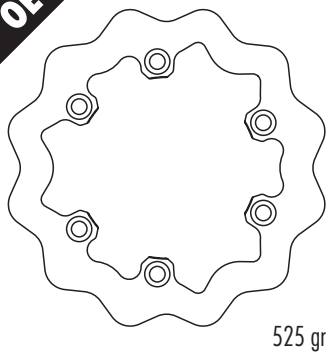

øext. 220 mm
øint. 122
4,0
525 gr

## GALFER DF 014 WS

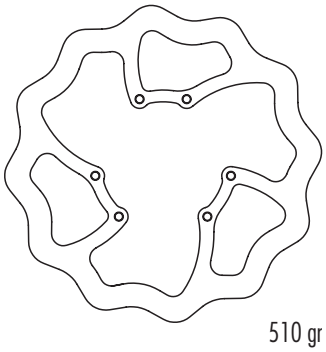

øext. 270 mm
øint. 101
3,0
SP001
SP045
510 gr

## GALFER DF 007 W

OE

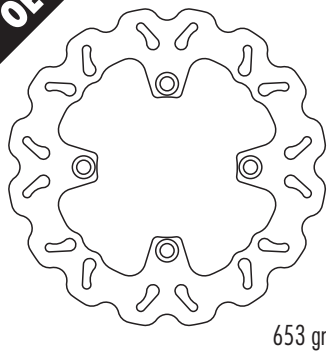

øext. 240 mm
øint. 105
4,0
653 gr

## GALFER DF 012 CW

OE

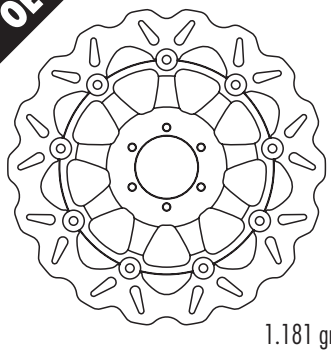

øext. 296 mm
øint. 58
4,0
17,0
1.181 gr

## GALFER DF 014 RWS

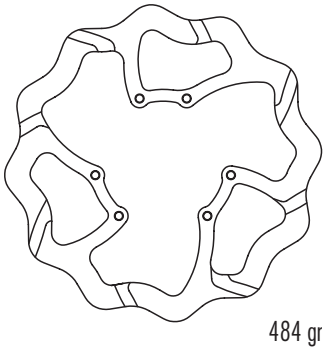

øext. 270 mm
øint. 101
3,0
SP001
SP045
484 gr

**OE:** Original equipment (original replacement disc) - **OE:** Equipo original (disco de remplazo del original)

**OE discs --> W - FLW - CW** **Special discs --> WS - WR - RW - RWS - FLS - FLX - FRS - CRW**

## GALFER DF 014 FLS

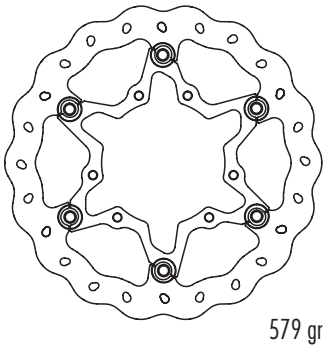

øext. 270 mm
øint. 101
3,0
SP001 SP045
579 gr

## GALFER DF 014 FRS

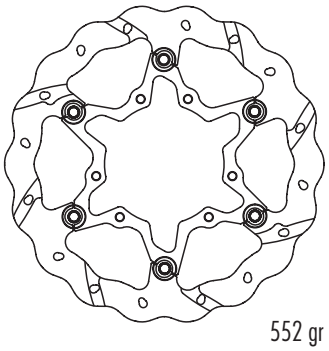

øext. 270 mm
øint. 101
3,0
SP001 SP045
552 gr

## GALFER DF 015 W

OE

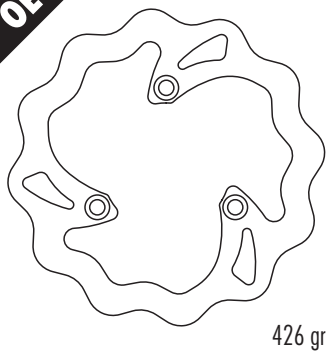

øext. 220 mm
øint. 89
3,5
426 gr

## GALFER DF 017 W

OE

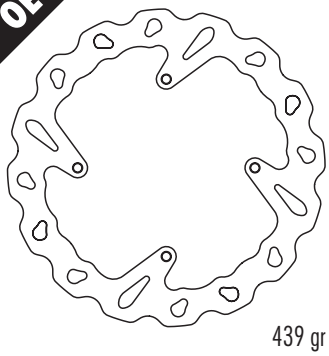

øext. 240 mm
øint. 118
3,0
439 gr

## GALFER DF 019 W

OE

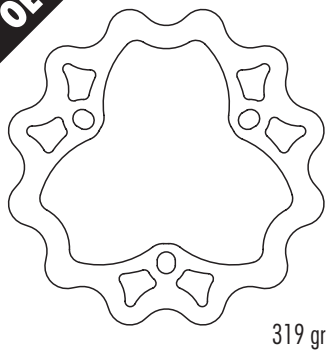

øext. 187 mm
øint. 88
4,0
319 gr

## GALFER DF 020 W

OE

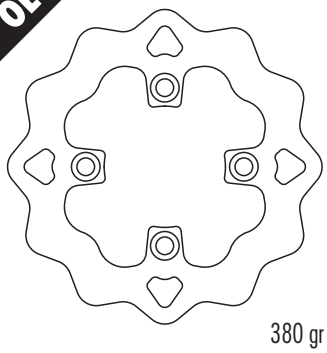

øext. 187 mm
øint. 72
4,0
380 gr

## GALFER DF 021 W

OE

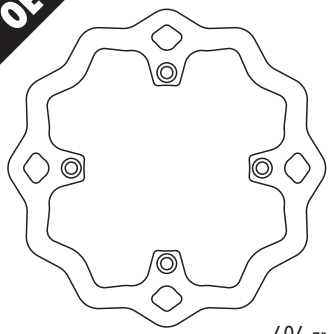

øext. 276 mm
øint. 144
4,0
606 gr

## GALFER DF 022 W

OE

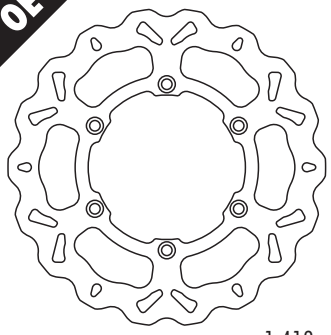

øext. 318 mm
øint. 144
5,0
1.418 gr

## GALFER DF 027 CW

OE

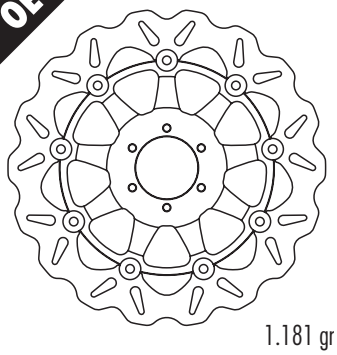

øext. 296 mm
øint. 58
5,0
17,0
1.181 gr

## GALFER DF 028 W

OE

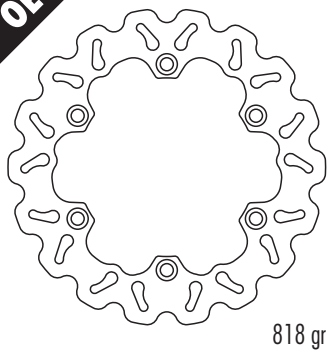

øext. 256 mm
øint. 144
5,0
818 gr

## GALFER DF 029 W

OE

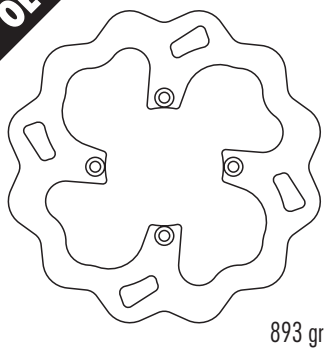

øext. 256 mm
øint. 94
5,0
893 gr

## GALFER DF 031 W

OE

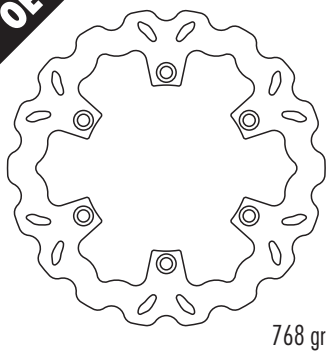

øext. 276 mm
øint. 144
4,0
768 gr

## GALFER DF 032 W

OE

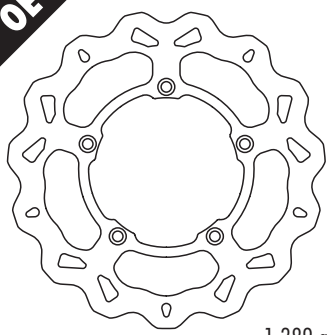

øext. 316 mm
øint. 144
5,0
1.389 gr

## GALFER DF 033 CW

OE

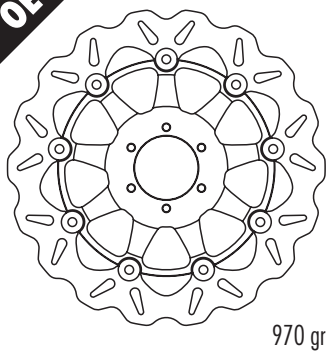

øext. 290 mm
øint. 58
4,0
17,0
970 gr

## GALFER DF 037 W

OE

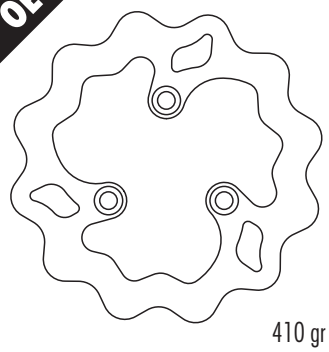

øext. 190 mm
øint. 58
3,6
410 gr

**OE:** Original equipment (original replacement disc) - **OE:** Equipo original (disco de remplazo del original)
**OE discs --> W - FLW - CW** **Special discs --> WS - WR - RW - RWS - FLS - FLX - FRS - CRW**

## GALFER DF 037 RW

| | |
|---|---|
| øext. | 190 mm |
| øint. | 58 |
| | 3,6 |
| | |
| | |

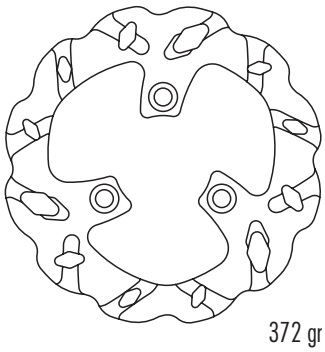

372 gr

## GALFER DF 042 CW — OE

| | |
|---|---|
| øext. | 310 mm |
| øint. | 58 |
| | 5,0 |
| | 21,5 |
| | |

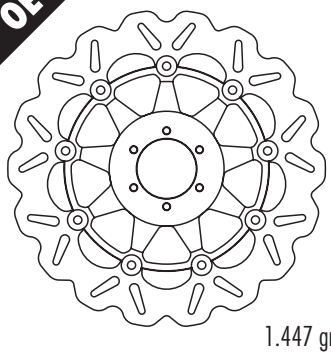

1.447 gr

## GALFER DF 055 W — OE

| | |
|---|---|
| øext. | 190 mm |
| øint. | 72 |
| | 3,5 |
| | |
| | |

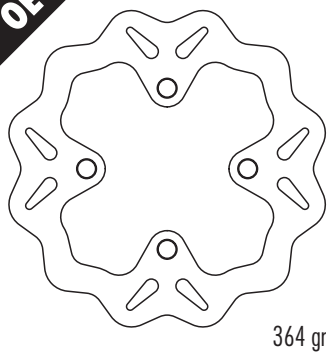

364 gr

## GALFER DF 037 FLS

| | |
|---|---|
| øext. | 220 mm |
| øint. | 58 |
| | 3,0 |
| | |
| | SP |

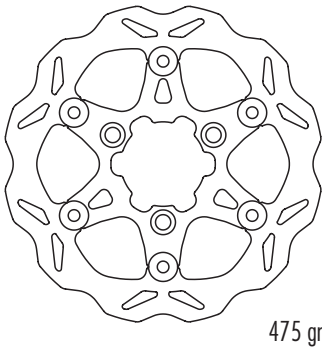

475 gr

## GALFER DF 047 W — OE

| | |
|---|---|
| øext. | 190 mm |
| øint. | 80,5 |
| | 3,0 |
| | |
| | |

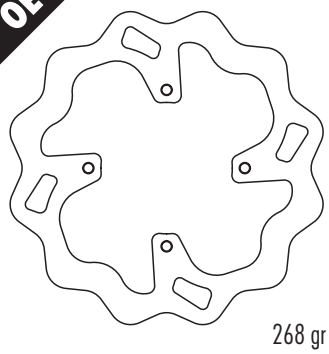

268 gr

## GALFER DF 059 CW — OE

| | |
|---|---|
| øext. | 296 mm |
| øint. | 62 |
| | 5,0 |
| | 23,0 |
| | |

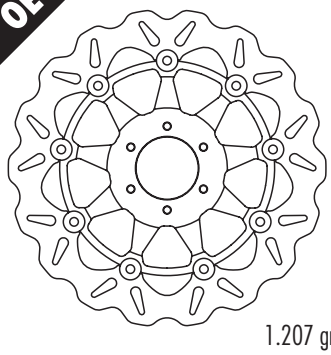

1.207 gr

## GALFER DF 039 W — OE

| | |
|---|---|
| øext. | 240 mm |
| øint. | 122 |
| | 4,0 |
| | |
| | |

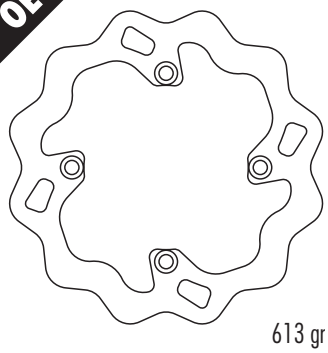

613 gr

## GALFER DF 048 W — OE

| | |
|---|---|
| øext. | 220 mm |
| øint. | 105 |
| | 4,2 |
| | |
| | |

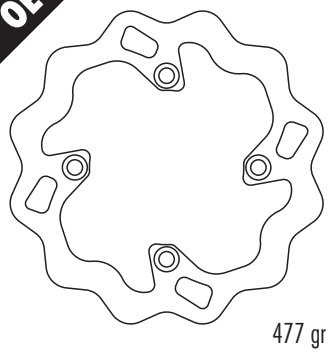

477 gr

## GALFER DF 060 W — OE

| | |
|---|---|
| øext. | 240 mm |
| øint. | 105 |
| | 4,0 |
| | |
| | |

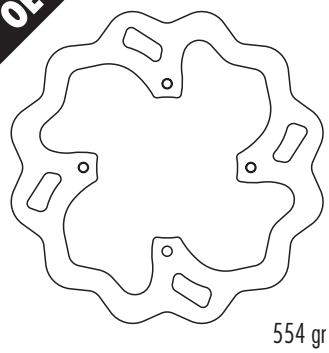

554 gr

## GALFER DF 040 W — OE

| | |
|---|---|
| øext. | 276 mm |
| øint. | 144 |
| | 5,0 |
| | |
| | |

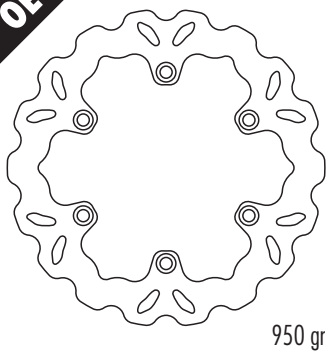

950 gr

## GALFER DF 049 W — OE

| | |
|---|---|
| øext. | 256 mm |
| øint. | 144 |
| | 5,0 |
| | |
| | |

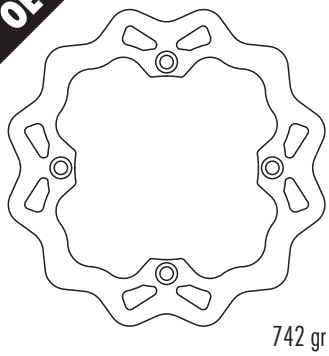

742 gr

## GALFER DF 061 CW — OE

| | |
|---|---|
| øext. | 296 mm |
| øint. | 58 |
| | 5,0 |
| | 23,25 |
| | |

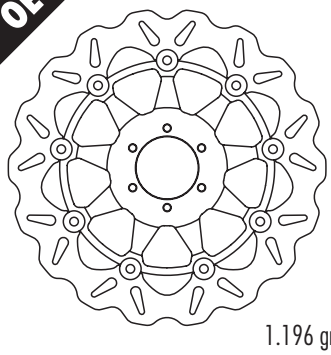

1.196 gr

## GALFER DF 041 CW — OE

| | |
|---|---|
| øext. | 310 mm |
| øint. | 62 |
| | 5,0 |
| | 21,5 |
| | |

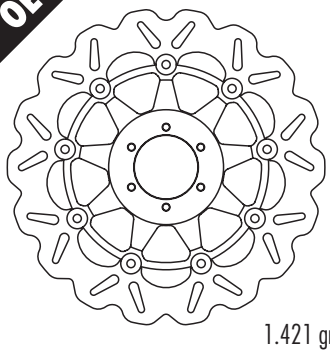

1.421 gr

## GALFER DF 050 W — OE

| | |
|---|---|
| øext. | 220 mm |
| øint. | 89 |
| | 3,0 |
| | |
| | |

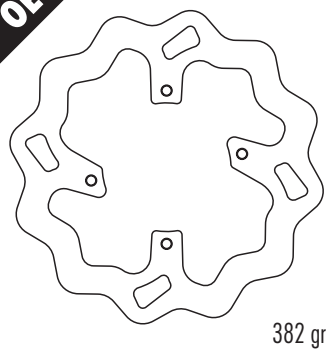

382 gr

## GALFER DF 062 CW — OE

| | |
|---|---|
| øext. | 296 mm |
| øint. | 94 |
| | 4,5 |
| | 14,5 |
| | |

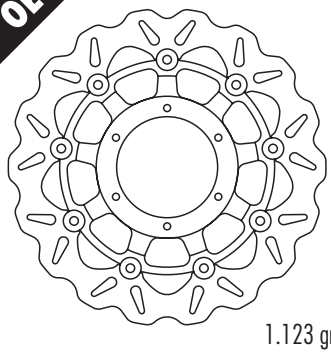

1.123 gr

**OE:** Original equipment (original replacement disc) - **OE:** Equipo original (disco de remplazo del original)
**OE discs --> W - FLW - CW** **Special discs --> WS - WR - RW - RWS - FLS - FLX - FRS - CRW**

**GALFER DF 063 CW** — OE

| | |
|---|---|
| øext. | 296 mm |
| øint. | 94 |
| | 5,0 |
| | 12,5 |

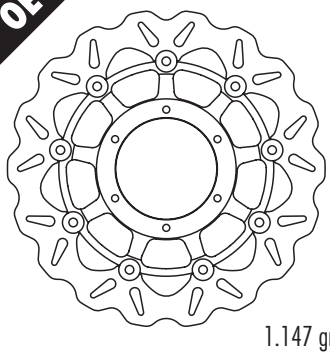

1.147 gr

**GALFER DF 067 CW** — OE

| | |
|---|---|
| øext. | 310 mm |
| øint. | 62 |
| | 5,0 |
| | 18,5 |

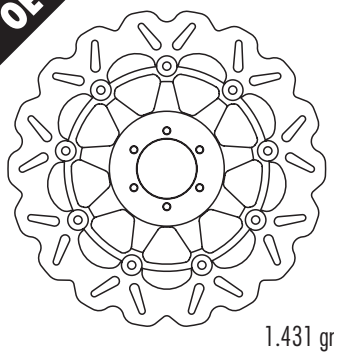

1.431 gr

**GALFER DF 069 RW**

| | |
|---|---|
| øext. | 240 mm |
| øint. | 122 |
| | 3,5 |

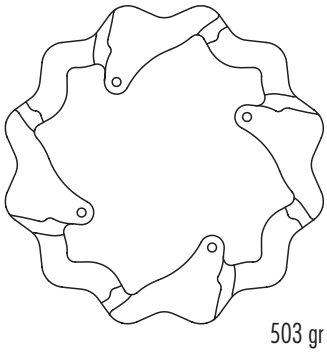

503 gr

**GALFER DF 064 W** — OE

| | |
|---|---|
| øext. | 185 mm |
| øint. | 64,4 |
| | 3,5 |

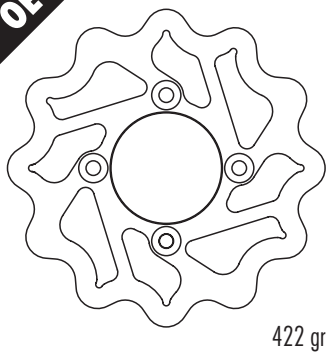

422 gr

**GALFER DF 068 CW** — OE

| | |
|---|---|
| øext. | 320 mm |
| øint. | 94 |
| | 5,0 |
| | 12,5 |

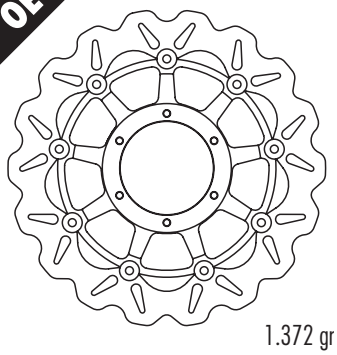

1.372 gr

**GALFER DF 069 FLW** — OE

| | |
|---|---|
| øext. | 240 mm |
| øint. | 122 |
| | 4,0 |

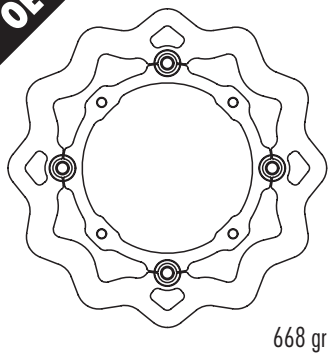

668 gr

**GALFER DF 065 CW** — OE

| | |
|---|---|
| øext. | 296 mm |
| øint. | 58 |
| | 4,5 |
| | 18,0 |

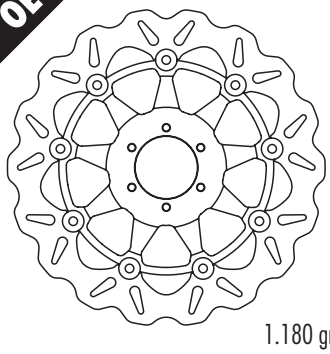

1.180 gr

**GALFER DF 068 CRWI-D**

| | |
|---|---|
| øext. | 320 mm |
| øint. | 94 |
| | 5,0 |
| | 12,5 |

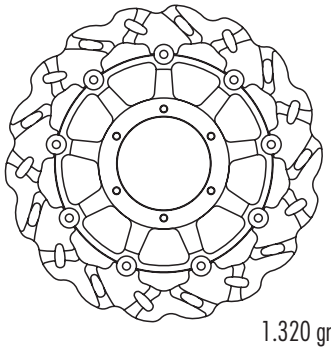

1.320 gr

**GALFER DF 070 CW** — OE

| | |
|---|---|
| øext. | 310 mm |
| øint. | 94 |
| | 5,0 |
| | 12,5 |

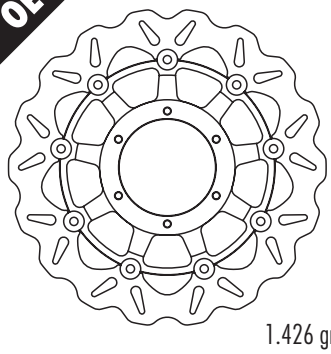

1.426 gr

**GALFER DF 066 CWI-D** — OE

| | |
|---|---|
| øext. | 330 mm |
| øint. | 94 |
| | 5,0 |
| | 12,5 |

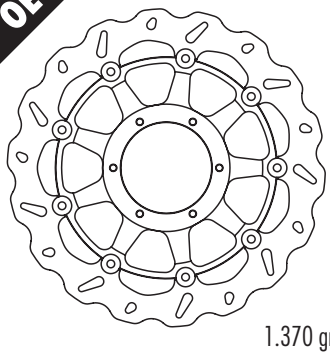

1.370 gr

**GALFER DF 069 W** — OE

| | |
|---|---|
| øext. | 240 mm |
| øint. | 122 |
| | 3,5 |

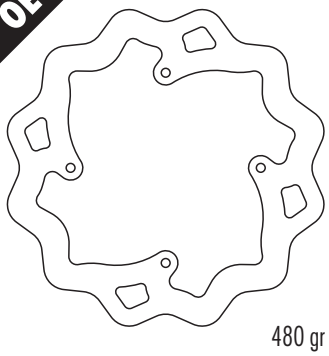

480 gr

**GALFER DF 070 CRWI-D**

| | |
|---|---|
| øext. | 310 mm |
| øint. | 94 |
| | 5,0 |
| | 12,5 |

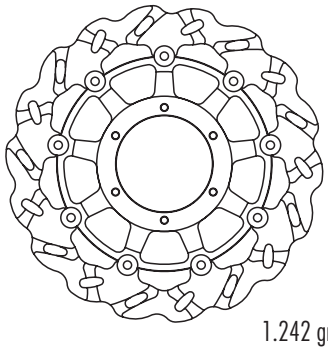

1.242 gr

**GALFER DF 066 CRWI-D**

| | |
|---|---|
| øext. | 330 mm |
| øint. | 94 |
| | 5,0 |
| | 12,5 |

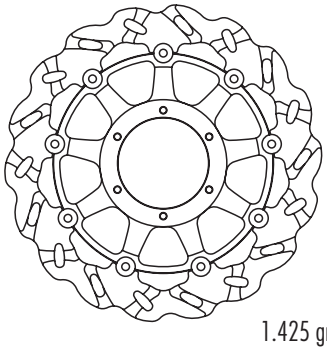

1.425 gr

**GALFER DF 069 WLL**

| | |
|---|---|
| øext. | 240 mm |
| øint. | 122 |
| | 3,5 |

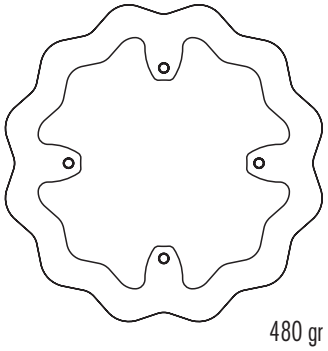

480 gr

**GALFER DF 071 W** — OE

| | |
|---|---|
| øext. | 220 mm |
| øint. | 105 |
| | 4,2 |

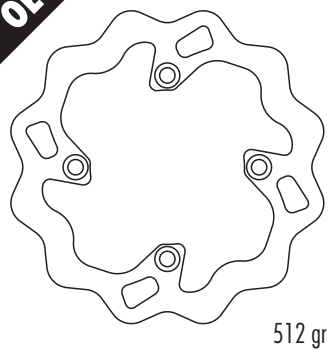

512 gr

**OE:** Original equipment (original replacement disc) - **OE:** Equipo original (disco de remplazo del original)
**OE discs --> W - FLW - CW** **Special discs --> WS - WR - RW - RWS - FLS - FLX - FRS - CRW**

**GALFER DF 071 WS**
øext. 260 mm
øint. 105
4,0
SP025
750 gr

**GALFER DF 076 CWI-D** OE
øext. 320 mm
øint. 94
5,0
15,25
1.390 gr

**GALFER DF 081 W** OE
øext. 240 mm
øint. 116,5
5,0
780 gr

**GALFER DF 072 W** OE
øext. 240 mm
øint. 116,5
5,0
762 gr

**GALFER DF 076 CRWI-D**
øext. 320 mm
øint. 94
5,0
15,25
1.319 gr

**GALFER DF 082 W** OE
øext. 260 mm
øint. 101
3,0
470 gr

**GALFER DF 073 W** OE
øext. 256 mm
øint. 144,5
4,0
592 gr

**GALFER DF 078 W** OE
øext. 220 mm
øint. 58
3,5
543 gr

**GALFER DF 082 FLW** OE
øext. 260 mm
øint. 101
3,0
561 gr

**GALFER DF 074 W** OE
øext. 320 mm
øint. 212
5,0
1.083 gr

**GALFER DF 079 CW** OE
øext. 296 mm
øint. 94
4,5
17,4
1.097 gr

**GALFER DF 082 WS**
øext. 270 mm
øint. 101
3,0
SP045
510 gr

**GALFER DF 075 W** OE
øext. 240 mm
øint. 117,5
5,0
766 gr

**GALFER DF 080 W** OE
øext. 320 mm
øint. 211
5,0
1.130 gr

**GALFER DF 083 W** OE
øext. 256 mm
øint. 144
4,5
818 gr

**OE:** Original equipment (original replacement disc) - **OE:** Equipo original (disco de remplazo del original)
**OE discs --> W - FLW - CW** **Special discs --> WS - WR - RW - RWS - FLS - FLX - FRS - CRW**

## GALFER DF 150 FLW
OE
øext. 250 mm
øint. 100
3,0
495 gr

## GALFER DF 154 W
OE
øext. 280 mm
øint. 130
5,0
1.087 gr

## GALFER DF 165 W
OE
øext. 184 mm
øint. 84
3,0
358 gr

## GALFER DF 150 FLS
øext. 270 mm
øint. 100
3,0
SP005
580 gr

## GALFER DF 155 W
OE
øext. 230 mm
øint. 82
4,0
580 gr

## GALFER DF 167 CW
OE
øext. 300 mm
øint. 61
5,0
13,5
1.209 gr

## GALFER DF 150 FRS
øext. 270 mm
øint. 100
3,0
SP005
694 gr

## GALFER DF 157 W
OE
øext. 230 mm
øint. 120
4,0
592 gr

## GALFER DF 168 CW
OE
øext. 320 mm
øint. 61
5,0
13,5
1.400 gr

## GALFER DF 151 W
OE
øext. 220 mm
øint. 101
4,0
533 gr

## GALFER DF 159 W
OE
øext. 270 mm
øint. 130
5,0
980 gr

## GALFER DF 168 CRWI-D
øext. 320 mm
øint. 61
5,0
13,5
1.370 gr

## GALFER DF 152 W
OE
øext. 220 mm
øint. 100
4,0
533 gr

## GALFER DF 161 W
OE
øext. 250 mm
øint. 130
5,0
857 gr

## GALFER DF 169 CW
OE
øext. 310 mm
øint. 61
5,0
13,5
1.410 gr

**OE:** Original equipment (original replacement disc) - **OE:** Equipo original (disco de remplazo del original)
**OE discs --> W - FLW - CW** **Special discs --> WS - WR - RW - RWS - FLS - FLX - FRS - CRW**

## GALFER DF 171 W

OE

| | |
|---|---|
| øext. | 220 mm |
| øint. | 96 |
| | 3,0 |
| | |
| | |

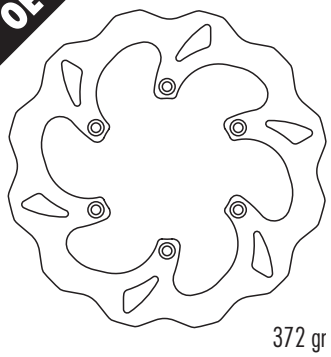

372 gr

## GALFER DF 172 W

OE

| | |
|---|---|
| øext. | 260 mm |
| øint. | 150 |
| | 5,0 |
| | |
| | |

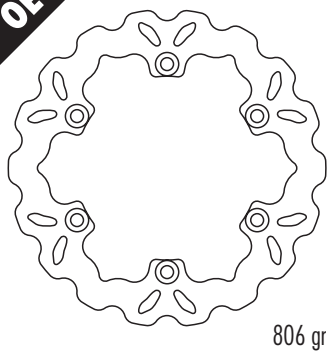

806 gr

## GALFER DF 175 W

OE

| | |
|---|---|
| øext. | 300 mm |
| øint. | 130 |
| | 5,0 |
| | |
| | |

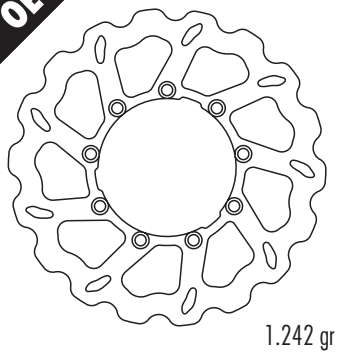

1.242 gr

## GALFER DF 177 W

OE

| | |
|---|---|
| øext. | 270 mm |
| øint. | 130 |
| | 5,0 |
| | |
| | |

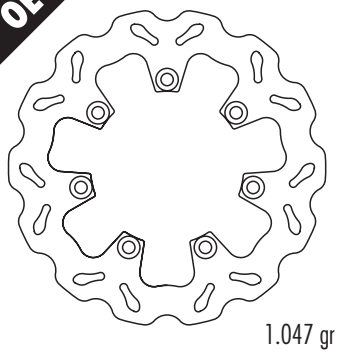

1.047 gr

## GALFER DF 178 CW

OE

| | |
|---|---|
| øext. | 296 mm |
| øint. | 61 |
| | 5,0 |
| | 13,5 |
| | |

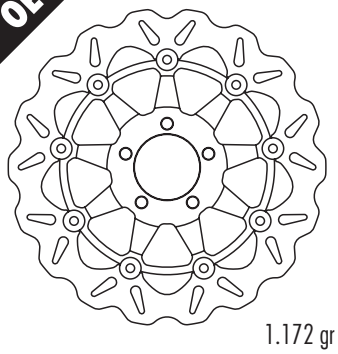

1.172 gr

## GALFER DF 179 W

OE

| | |
|---|---|
| øext. | 240 mm |
| øint. | 116 |
| | 4,0 |
| | |
| | |

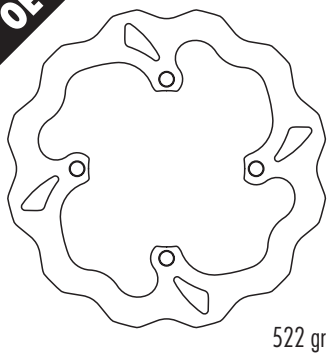

522 gr

## GALFER DF 179 WLL

| | |
|---|---|
| øext. | 240 mm |
| øint. | 116 |
| | 4,0 |
| | |
| | |

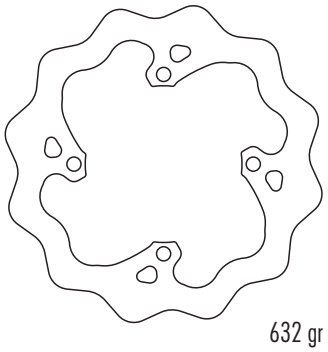

632 gr

## GALFER DF 179 RW

| | |
|---|---|
| øext. | 240 mm |
| øint. | 116 |
| | 4,0 |
| | |
| | |

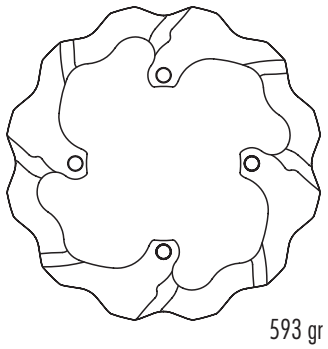

593 gr

## GALFER DF 180 CW

OE

| | |
|---|---|
| øext. | 280 mm |
| øint. | 80 |
| | 5,0 |
| | 0,0 |
| | |

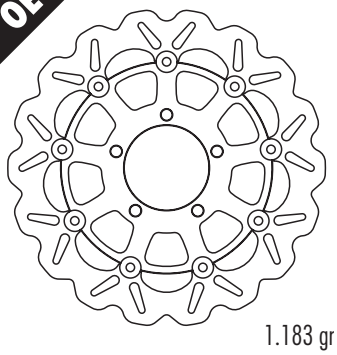

1.183 gr

## GALFER DF 182 FLW

OE

| | |
|---|---|
| øext. | 250 mm |
| øint. | 100 |
| | 3,0 |
| | |
| | |

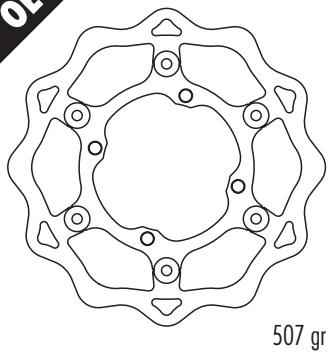

507 gr

## GALFER DF 182 FLS

| | |
|---|---|
| øext. | 270 mm |
| øint. | 100 |
| | 3,0 |
| | |
| | SP005 |

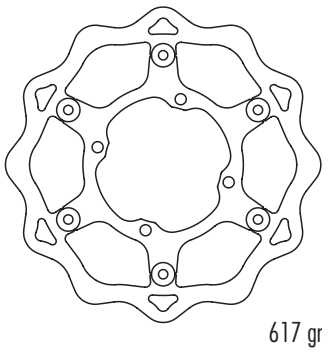

617 gr

## GALFER DF 182 FRS

| | |
|---|---|
| øext. | 270 mm |
| øint. | 100 |
| | 3,0 |
| | |
| | SP005 |

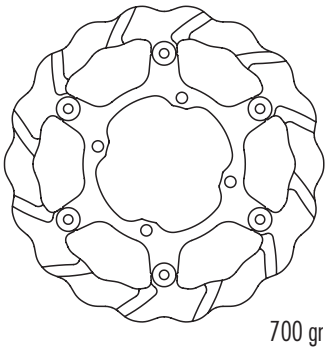

700 gr

## GALFER DF 183 W

OE

| | |
|---|---|
| øext. | 240 mm |
| øint. | 100 |
| | 4,0 |
| | |
| | |

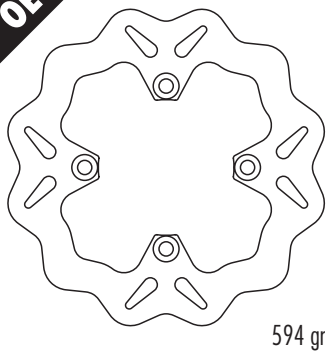

594 gr

## GALFER DF 184 CW

OE

| | |
|---|---|
| øext. | 300 mm |
| øint. | 80 |
| | 5,0 |
| | 0,0 |
| | |

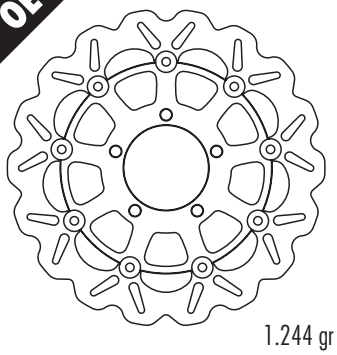

1.244 gr

## GALFER DF 184 CRWI-D

| | |
|---|---|
| øext. | 300 mm |
| øint. | 80 |
| | 5,0 |
| | 0,0 |
| | |

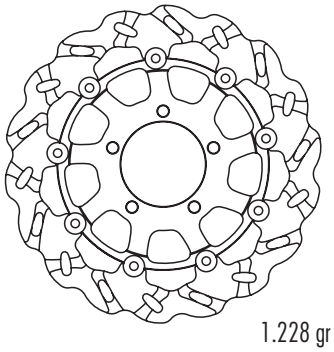

1.228 gr

**OE:** Original equipment (original replacement disc) - **OE:** Equipo original (disco de remplazo del original)
**OE discs --> W - FLW - CW** **Special discs --> WS - WR - RW - RWS - FLS - FLX - FRS - CRW**

## GALFER DF 185 W

OE

øext. 250 mm
øint. 130
5,0

857 gr

## GALFER DF 191 W

OE

øext. 250 mm
øint. 110
5,0

870 gr

## GALFER DF 197 W

OE

øext. 250 mm
øint. 100
5,0

880 gr

## GALFER DF 186 W

OE

øext. 250 mm
øint. 100
5,0

876 gr

## GALFER DF 193 W

OE

øext. 220 mm
øint. 100
5,0

491 gr

## GALFER DF 198 W

OE

øext. 250 mm
øint. 100
5,0

935 gr

## GALFER DF 188 W

OE

øext. 230 mm
øint. 100
4,0

601 gr

## GALFER DF 193 WA

OE

øext. 220 mm
øint. 100
5,0

495 gr

## GALFER DF 199 W

OE

øext. 230 mm
øint. 100
5,0

744 gr

## GALFER DF 190 CW

OE

REMOVE ORIGINAL SPACE

øext. 310 mm
øint. 80
5,0
0,0

1.366 gr

## GALFER DF 195 W

OE

øext. 180 mm
øint. 79
3,0

480 gr

## GALFER DF 200 FLW

OE

øext. 250 mm
øint. 109
3,0

597 gr

## GALFER DF 190 CRWI-D

REMOVE ORIGINAL SPACE

øext. 310 mm
øint. 80
5,0
0,0

1.325 gr

## GALFER DF 196 W

OE

øext. 240 mm
øint. 130
5,0

710 gr

## GALFER DF 200 WS

øext. 270 mm
øint. 109
3,0
SP005

498 gr

**OE:** Original equipment (original replacement disc) - **OE:** Equipo original (disco de remplazo del original)
**OE discs --> W - FLW - CW** **Special discs --> WS - WR - RW - RWS - FLS - FLX - FRS - CRW**

## GALFER DF 200 RWS

øext. 270 mm
øint. 109
3,0
SP005

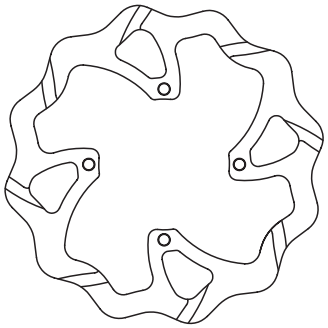

474 gr

## GALFER DF 203 W

OE

øext. 290 mm
øint. 130
4,5

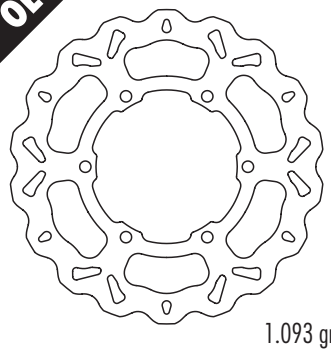

1.093 gr

## GALFER DF 206 W

OE

øext. 270 mm
øint. 110
5,0

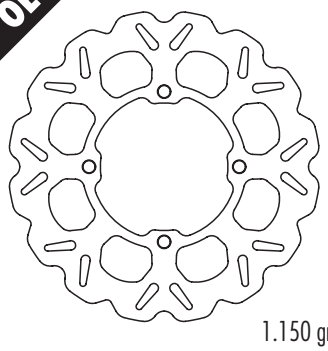

1.150 gr

## GALFER DF 200 FLS

øext. 270 mm
øint. 109
3,0
SP005

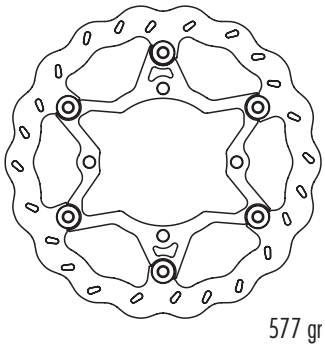

577 gr

## GALFER DF 203 FLW

OE

øext. 290 mm
øint. 130
4,5

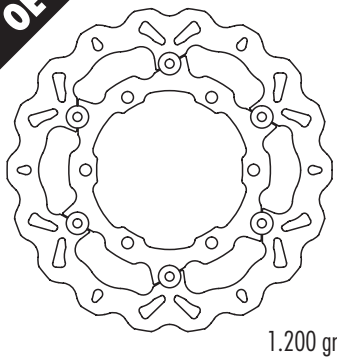

1.200 gr

## GALFER DF 208 FLW

OE

øext. 270 mm
øint. 109
3,0

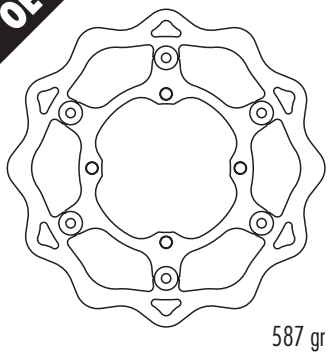

587 gr

## GALFER DF 200 FRS

øext. 270 mm
øint. 109
3,0
SP005

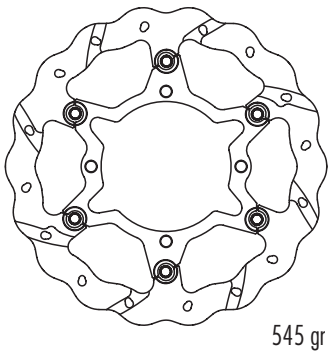

545 gr

## GALFER DF 203 CW

øext. 290 mm
øint. 130
5,5

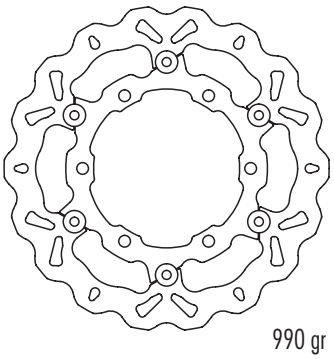

990 gr

## GALFER DF 301 FLW

OE

øext. 250 mm
øint. 118
3,0

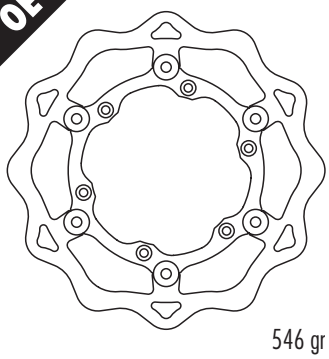

546 gr

## GALFER DF 201 W

OE

øext. 250 mm
øint. 100
3,5

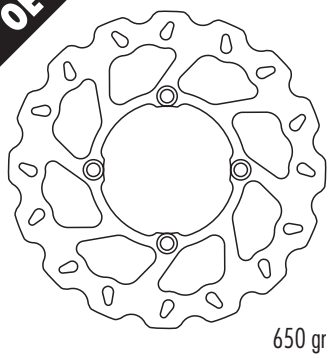

650 gr

## GALFER DF 204 W

OE

øext. 220 mm
øint. 101
4,6

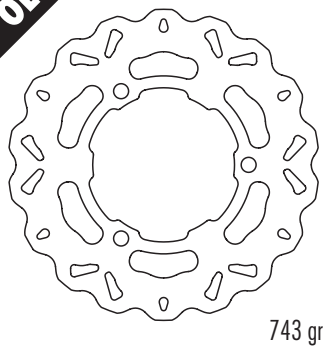

743 gr

## GALFER DF 301 WS

øext. 270 mm
øint. 118
3,0
SP004

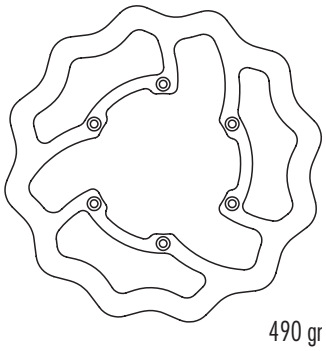

490 gr

## GALFER DF 202 W

OE

øext. 240 mm
øint. 100
4,5

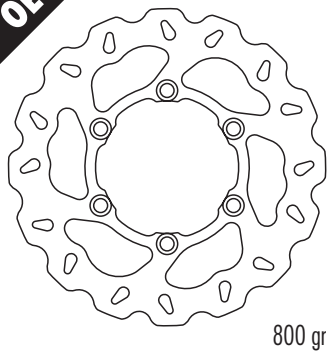

800 gr

## GALFER DF 205 CW

OE

øext. 290 mm
øint. 130
4,5

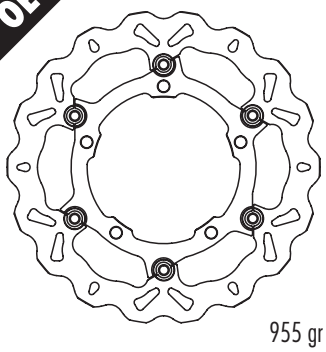

955 gr

## GALFER DF 301 RWS

øext. 270 mm
øint. 118
3,0
SP004

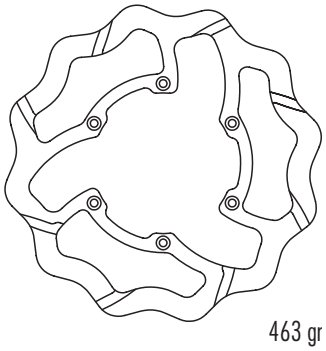

463 gr

**OE:** Original equipment (original replacement disc) - **OE:** Equipo original (disco de remplazo del original)
**OE discs --> W - FLW - CW** **Special discs --> WS - WR - RW - RWS - FLS - FLX - FRS - CRW**

## GALFER DF 301 FLS

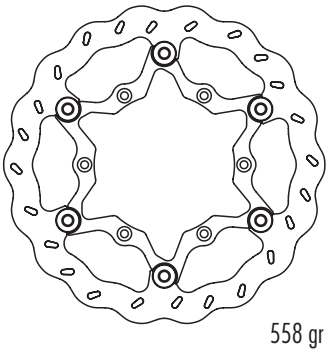

| | |
|---|---|
| øext. | 270 mm |
| øint. | 118 |
| | 3,0 |
| | |
| | SP004 |

558 gr

## GALFER DF 312 W

OE

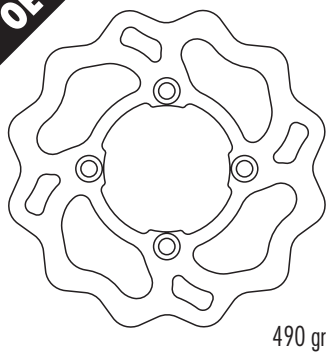

| | |
|---|---|
| øext. | 210 mm |
| øint. | 81 |
| | 4,0 |
| | |
| | |

490 gr

## GALFER DF 318 W

OE

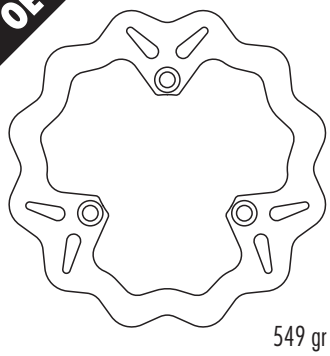

| | |
|---|---|
| øext. | 220 mm |
| øint. | 100 |
| | 4,0 |
| | |
| | |

549 gr

## GALFER DF 301 FRS

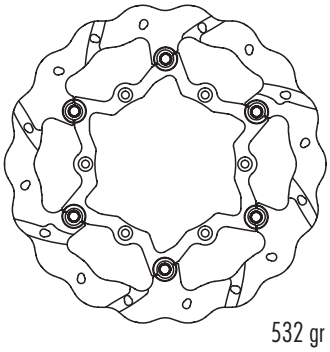

| | |
|---|---|
| øext. | 270 mm |
| øint. | 118 |
| | 3,0 |
| | |
| | SP004 |

532 gr

## GALFER DF 314 CW

OE

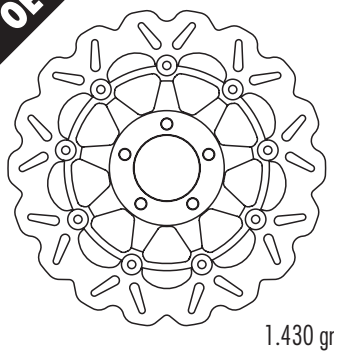

| | |
|---|---|
| øext. | 310 mm |
| øint. | 64 |
| | 5,0 |
| | 19,5 |
| | |

1.430 gr

## GALFER DF 319 W

OE

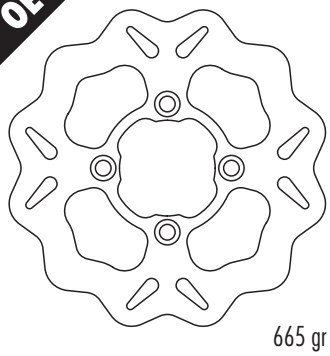

| | |
|---|---|
| øext. | 220 mm |
| øint. | 64 |
| | 4,0 |
| | |
| | |

665 gr

## GALFER DF 302 W

OE

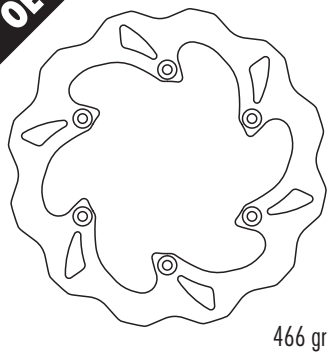

| | |
|---|---|
| øext. | 220 mm |
| øint. | 118 |
| | 4,0 |
| | |
| | |

466 gr

## GALFER DF 315 W

OE

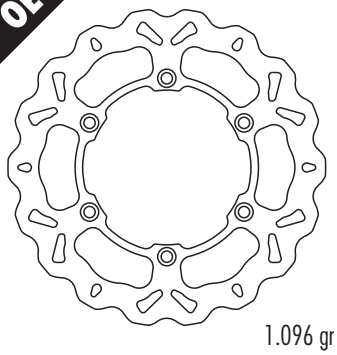

| | |
|---|---|
| øext. | 300 mm |
| øint. | 121 |
| | 4,0 |
| | |
| | |

1.096 gr

## GALFER DF 320 CW

OE

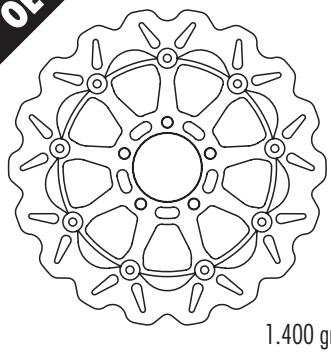

| | |
|---|---|
| øext. | 320 mm |
| øint. | 69 |
| | 5,0 |
| | 0,0 |
| | |

1.400 gr

## GALFER DF 306 W

OE

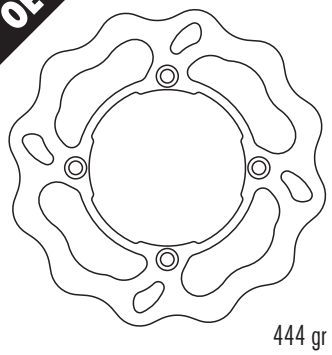

| | |
|---|---|
| øext. | 250 mm |
| øint. | 121 |
| | 3,5 |
| | |
| | |

444 gr

## GALFER DF 316 W

OE

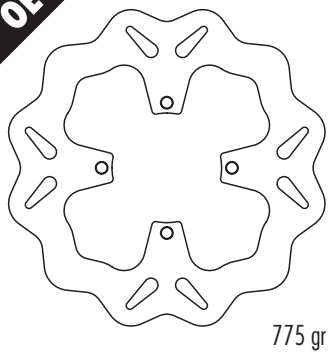

| | |
|---|---|
| øext. | 250 mm |
| øint. | 84 |
| | 4,0 |
| | |
| | |

775 gr

## GALFER DF 320 CRWI-D

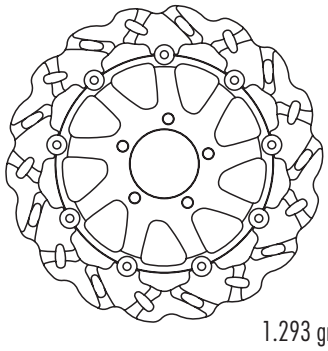

| | |
|---|---|
| øext. | 320 mm |
| øint. | 69 |
| | 5,0 |
| | 0,0 |
| | |

1.293 gr

## GALFER DF 307 W

OE

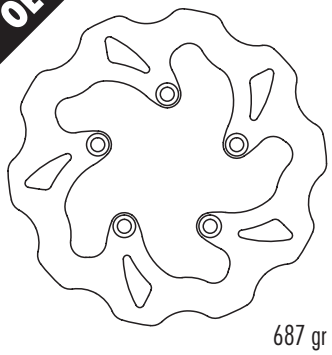

| | |
|---|---|
| øext. | 240 mm |
| øint. | 89 |
| | 4,0 |
| | |
| | |

687 gr

## GALFER DF 317 CW

OE

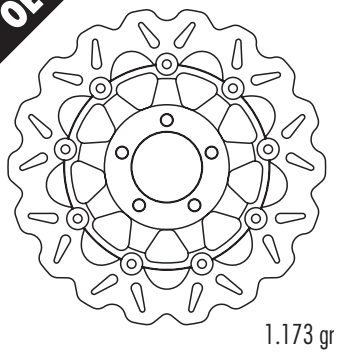

| | |
|---|---|
| øext. | 290 mm |
| øint. | 64 |
| | 5,0 |
| | 19,5 |
| | |

1.173 gr

## GALFER DF 321 CW

OE

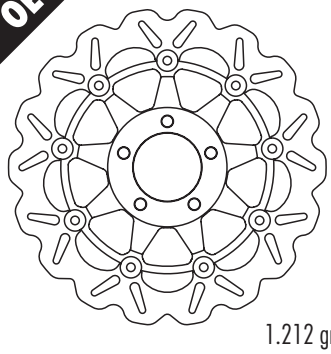

| | |
|---|---|
| øext. | 300 mm |
| øint. | 64 |
| | 5,0 |
| | 19,5 |
| | |

1.212 gr

**OE:** Original equipment (original replacement disc) - **OE:** Equipo original (disco de remplazo del original)
**OE discs --> W - FLW - CW** **Special discs --> WS - WR - RW - RWS - FLS - FLX - FRS - CRW**

## GALFER DF 321 CRWI-D

| | |
|---|---|
| øext. | 300 mm |
| øint. | 64 |
| | 5,0 |
| | 19,5 |

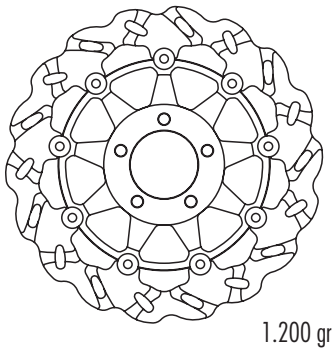

1.200 gr

## GALFER DF 326 CW — OE

| | |
|---|---|
| øext. | 310 mm |
| øint. | 61 |
| | 5,0 |
| | 21,5 |

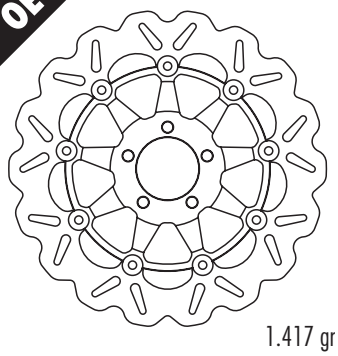

1.417 gr

## GALFER DF 331 FLW — OE

| | |
|---|---|
| øext. | 260 mm |
| øint. | 121 |
| | 4,5 |

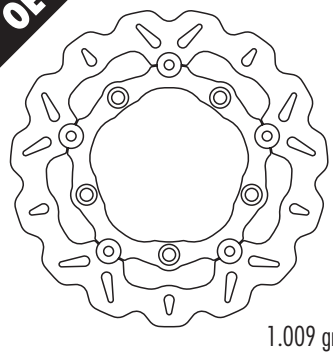

1.009 gr

## GALFER DF 322 CW — OE

| | |
|---|---|
| øext. | 300 mm |
| øint. | 69 |
| | 5,0 |
| | 0,0 |

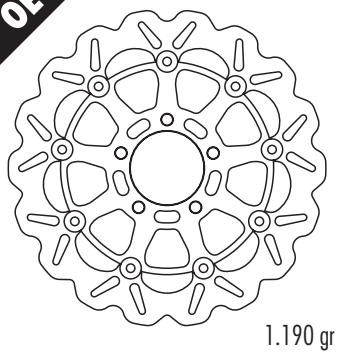

1.190 gr

## GALFER DF 327 FLW — OE

| | |
|---|---|
| øext. | 290 mm |
| øint. | 121 |
| | 4,0 |

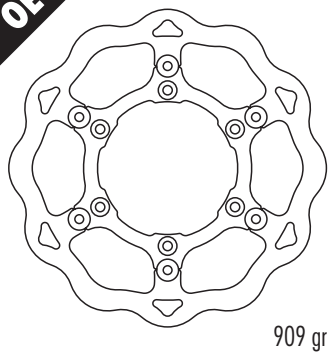

909 gr

## GALFER DF 332 W — OE

| | |
|---|---|
| øext. | 290 mm |
| øint. | 190 |
| | 4,5 |

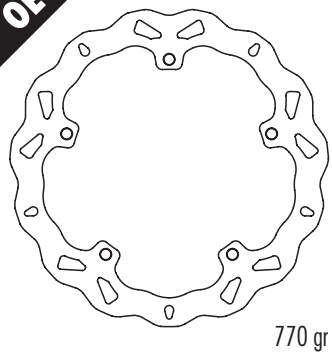

770 gr

## GALFER DF 322 CRWI-D

| | |
|---|---|
| øext. | 300 mm |
| øint. | 69 |
| | 5,0 |
| | 0,0 |

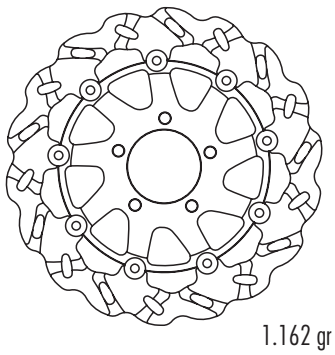

1.162 gr

## GALFER DF 328 W — OE

| | |
|---|---|
| øext. | 240 mm |
| øint. | 118 |
| | 4,0 |

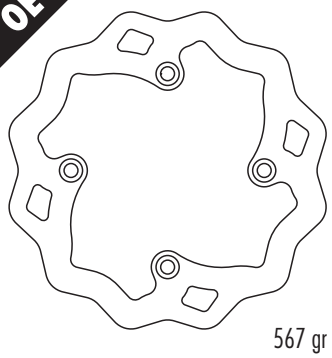

567 gr

## GALFER DF 332 WS

| | |
|---|---|
| øext. | 310 mm |
| øint. | 190 |
| | 4,5 |
| | SP |

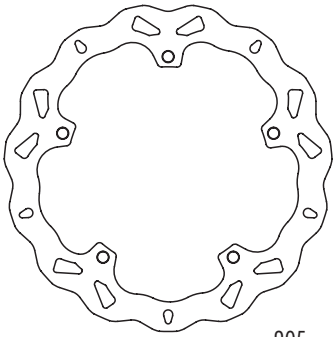

905 gr

## GALFER DF 323 CW — OE

| | |
|---|---|
| øext. | 310 mm |
| øint. | 69 |
| | 5,0 |
| | 0,0 |

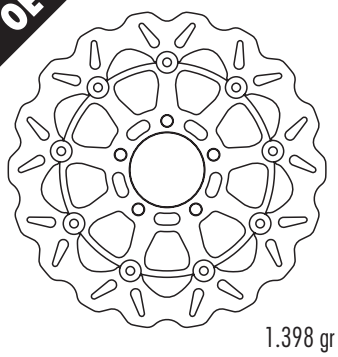

1.398 gr

## GALFER DF 329 W — OE

| | |
|---|---|
| øext. | 200 mm |
| øint. | 84 |
| | 3,5 |

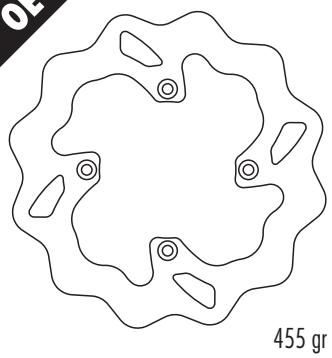

455 gr

## GALFER DF 334 CW — OE

| | |
|---|---|
| øext. | 290 mm |
| øint. | 121 |
| | 5,0 |
| | 0,0 |

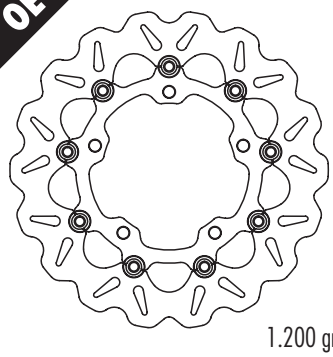

1.200 gr

## GALFER DF 323 CRWI-D

| | |
|---|---|
| øext. | 310 mm |
| øint. | 69 |
| | 5,0 |
| | 0,0 |

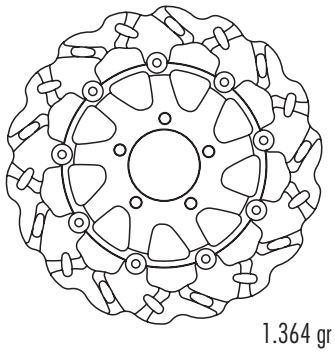

1.364 gr

## GALFER DF 330 W — OE

| | |
|---|---|
| øext. | 260 mm |
| øint. | 121 |
| | 4,5 |

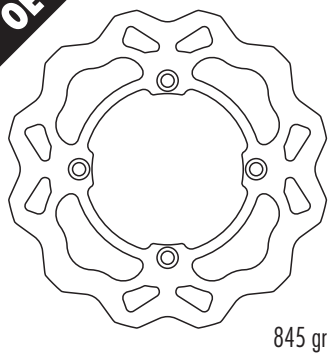

845 gr

## GALFER DF 337 CW — OE

| | |
|---|---|
| øext. | 290 mm |
| øint. | 69 |
| | 5,0 |
| | 0,0 |

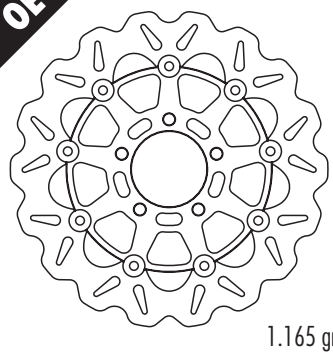

1.165 gr

**OE:** Original equipment (original replacement disc) • **OE:** Equipo original (disco de remplazo del original)
**OE discs --> W - FLW - CW** **Special discs --> WS - WR - RW - RWS - FLS - FLX - FRS - CRW**

## GALFER DF 338 W

OE

øext. 240 mm
øint. 118
3,5

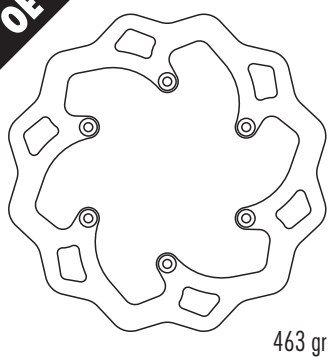

463 gr

## GALFER DF 339 W

OE

øext. 220 mm
øint. 89
5,0

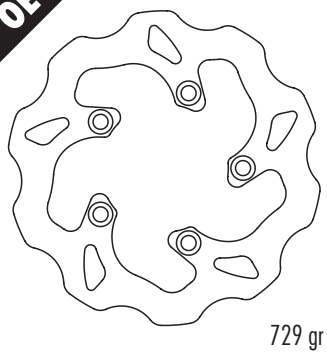

729 gr

## GALFER DF 339 FLW

øext. 220 mm
øint. 90
5,0

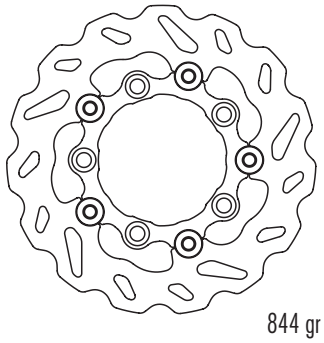

844 gr

## GALFER DF 341 W

OE

øext. 260 mm
øint. 121
4,0

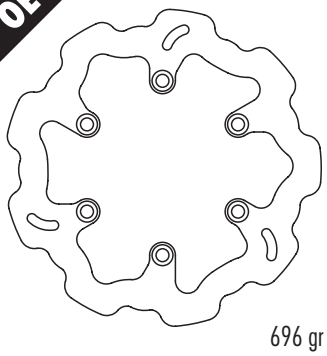

696 gr

## GALFER DF 342 W

OE

øext. 210 mm
øint. 109
5,0

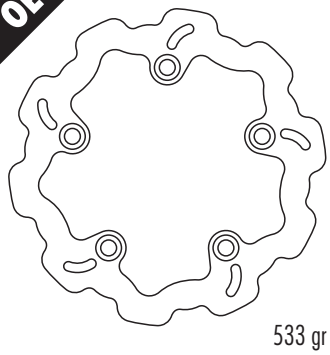

533 gr

## GALFER DF 344 W

OE

øext. 260 mm
øint. 121
4,5

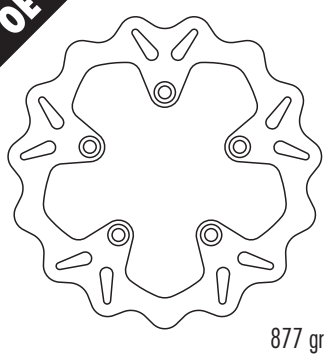

877 gr

## GALFER DF 346 W

OE

øext. 260 mm
øint. 105
5,0

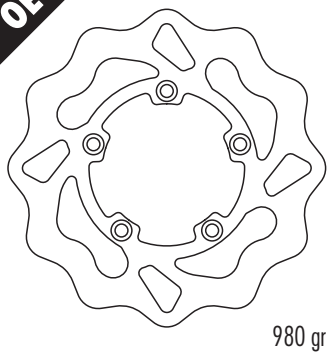

980 gr

## GALFER DF 348 CW

OE

øext. 310 mm
øint. 100
5,0
0,0

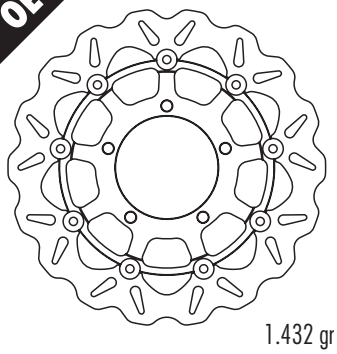

1.432 gr

## GALFER DF 348 CRWI-D

øext. 310 mm
øint. 100
5,0
0,0

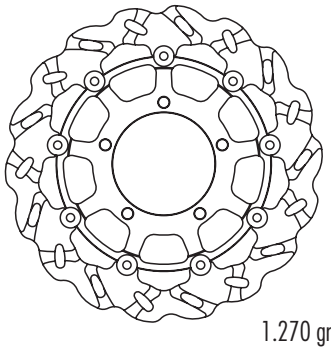

1.270 gr

## GALFER DF 349 FLW

OE

øext. 250 mm
øint. 118
3,0

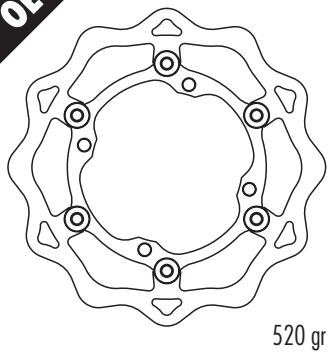

520 gr

## GALFER DF 349 WS

øext. 270 mm
øint. 109
3,0
SP005

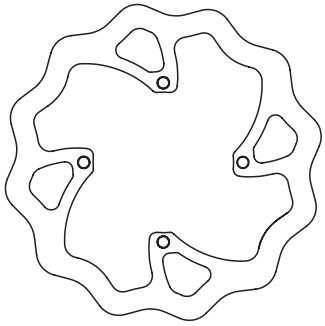

498 gr

## GALFER DF 349 RWS

øext. 270 mm
øint. 109
3,0
SP005

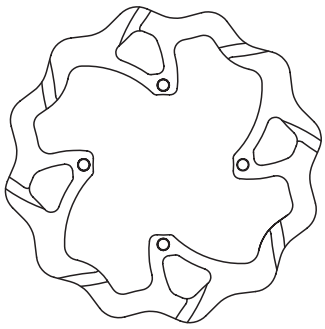

474 gr

## GALFER DF 349 FLS

øext. 270 mm
øint. 118
3,0
SP005

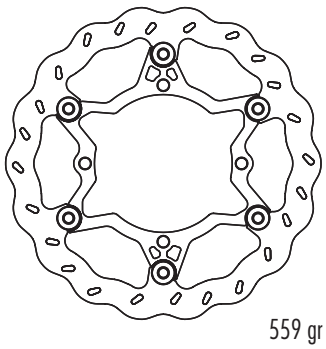

559 gr

## GALFER DF 349 FRS

øext. 270 mm
øint. 118
3,0
SP005

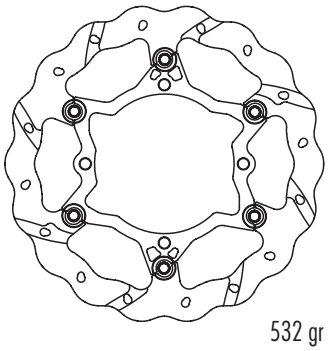

532 gr

## GALFER DF 350 W

OE

øext. 240 mm
øint. 122
4,0

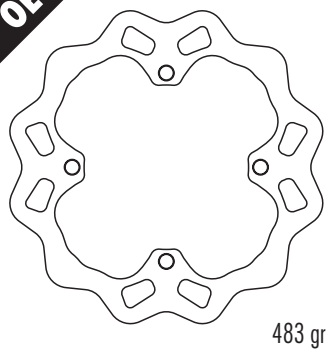

483 gr

**OE:** Original equipment (original replacement disc) - **OE:** Equipo original (disco de remplazo del original)
**OE discs --> W - FLW - CW** **Special discs --> WS - WR - RW - RWS - FLS - FLX - FRS - CRW**

## GALFER DF 350 WLL

| | |
|---|---|
| øext. | 240 mm |
| øint. | 122 |
| | 4,0 |

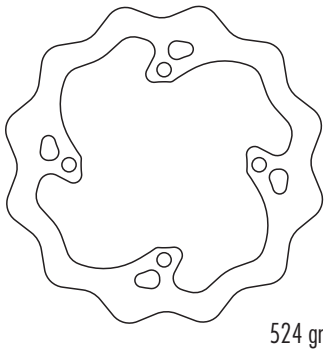

524 gr

## GALFER DF 353 W

OE

| | |
|---|---|
| øext. | 200 mm |
| øint. | 100,5 |
| | 3,5 |

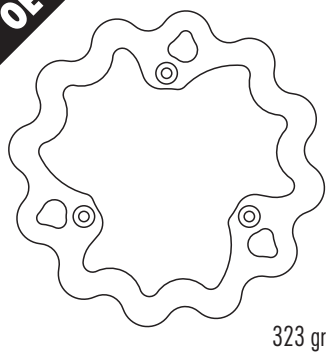

323 gr

## GALFER DF 358 CRWI-D

| | |
|---|---|
| øext. | 310 mm |
| øint. | 102 |
| | 5,0 |
| | 0,0 |

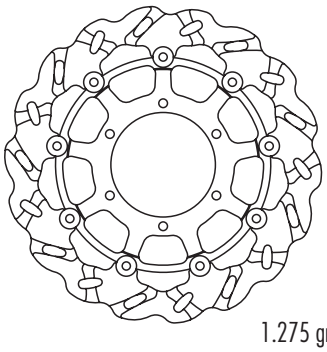

1.275 gr

## GALFER DF 350 RW

| | |
|---|---|
| øext. | 240 mm |
| øint. | 122 |
| | 4,0 |

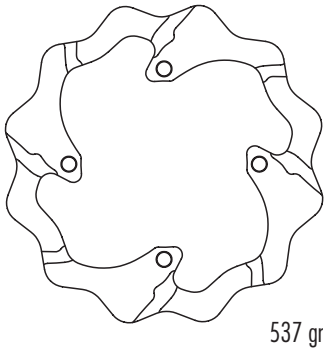

537 gr

## GALFER DF 354 W

OE

| | |
|---|---|
| øext. | 240 mm |
| øint. | 118 |
| | 4,0 |

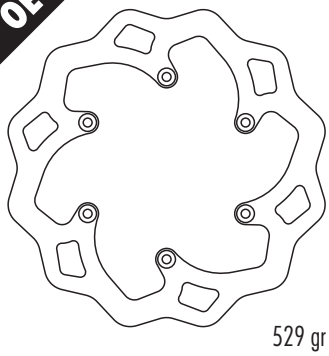

529 gr

## GALFER DF 359 CW

OE

| | |
|---|---|
| øext. | 275 mm |
| øint. | 89 |
| | 5,6 |
| | 6,65 |

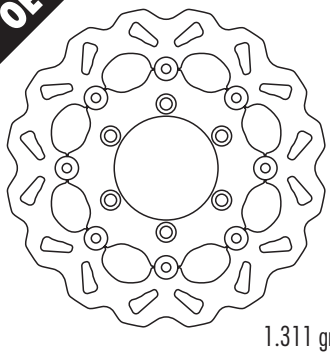

1.311 gr

## GALFER DF 351 CW

OE

| | |
|---|---|
| øext. | 310 mm |
| øint. | 121 |
| | 5,0 |
| | 0,0 |

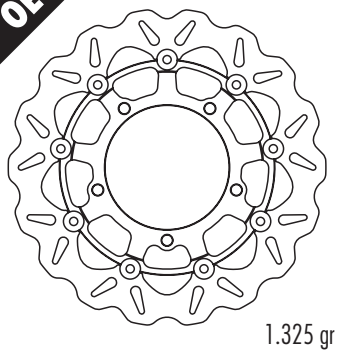

1.325 gr

## GALFER DF 355 W

OE

| | |
|---|---|
| øext. | 260 mm |
| øint. | 140 |
| | 5,0 |

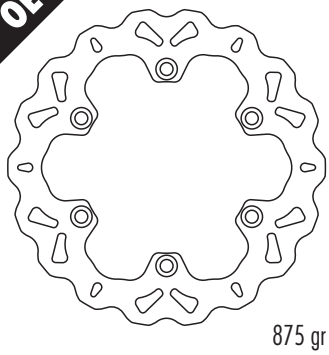

875 gr

## GALFER DF 360 W

OE

| | |
|---|---|
| øext. | 210 mm |
| øint. | 89 |
| | 5,0 |

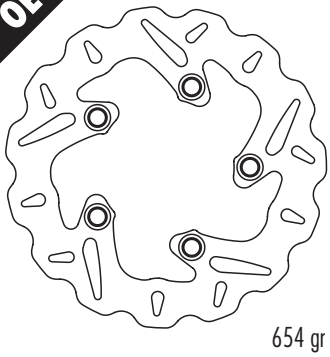

654 gr

## GALFER DF 351 CRWI-D

| | |
|---|---|
| øext. | 310 mm |
| øint. | 121 |
| | 5,0 |
| | 0,0 |

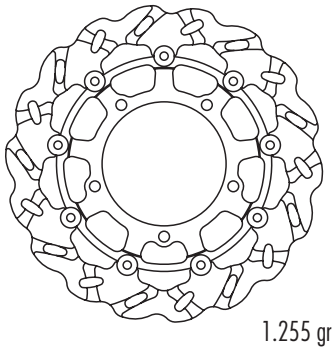

1.255 gr

## GALFER DF 356 W

OE

| | |
|---|---|
| øext. | 163 mm |
| øint. | 34 |
| | 3,8 |

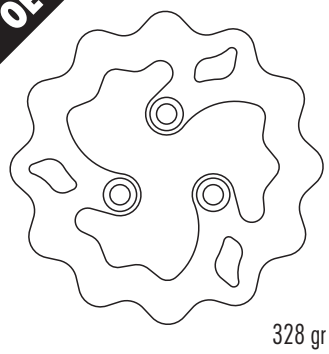

328 gr

## GALFER DF 361 W

OE

| | |
|---|---|
| øext. | 260 mm |
| øint. | 141 |
| | 5,0 |

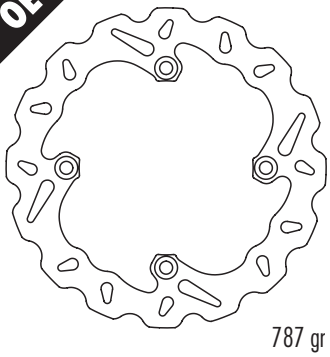

787 gr

## GALFER DF 352 W

OE

| | |
|---|---|
| øext. | 240 mm |
| øint. | 120 |
| | 5,0 |

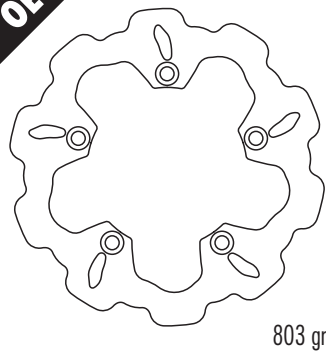

803 gr

## GALFER DF 358 CW

OE

| | |
|---|---|
| øext. | 310 mm |
| øint. | 102 |
| | 5,0 |
| | 0,0 |

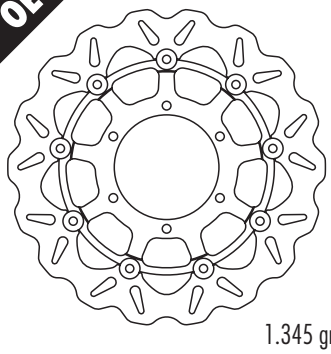

1.345 gr

## GALFER DF 363 W

OE

| | |
|---|---|
| øext. | 250 mm |
| øint. | 117 |
| | 5,0 |

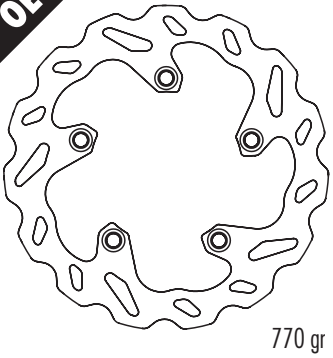

770 gr

**OE:** Original equipment (original replacement disc) - **OE:** Equipo original (disco de remplazo del original)
**OE discs --> W - FLW - CW** **Special discs --> WS - WR - RW - RWS - FLS - FLX - FRS - CRW**

## GALFER DF 364 W

OE

øext. 240 mm
øint. 89
4,5

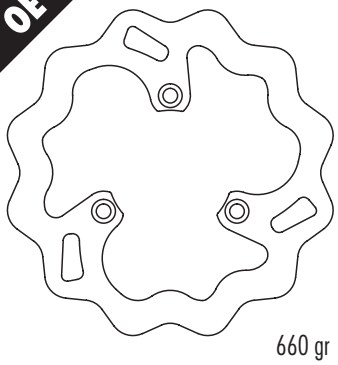

660 gr

## GALFER DF 452 W

OE

øext. 267 mm
øint. 118
4,0

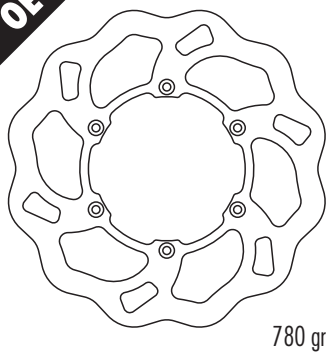

780 gr

## GALFER DF 458 W

OE

øext. 245 mm
øint. 115
4,5

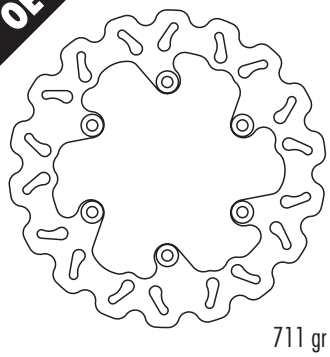

711 gr

## GALFER DF 365 W

OE

øext. 220 mm
øint. 89
4,5

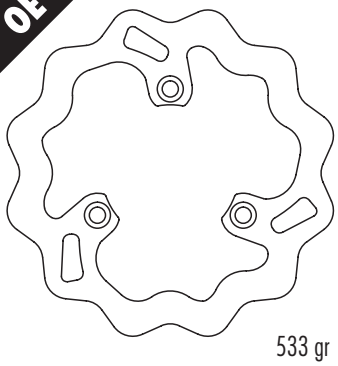

533 gr

## GALFER DF 453 W

OE

øext. 267 mm
øint. 132
4,0

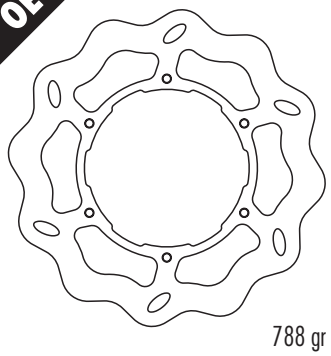

788 gr

## GALFER DF 459 W

OE

øext. 282 mm
øint. 132
5,0

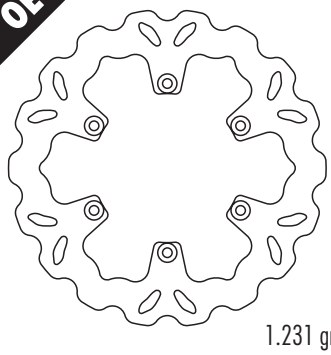

1.231 gr

## GALFER DF 448 CW

OE

øext. 298 mm
øint. 132
4,5
0,0

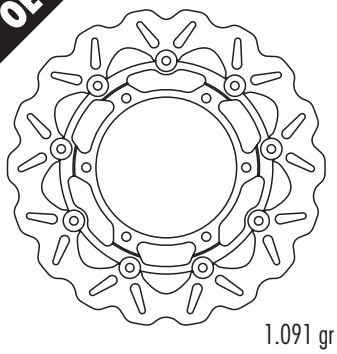

1.091 gr

## GALFER DF 454 W

OE

øext. 245 mm
øint. 115
4,0

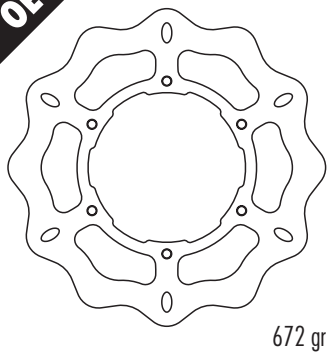

672 gr

## GALFER DF 460 CW

OE

øext. 298 mm
øint. 132
4,5
0,0

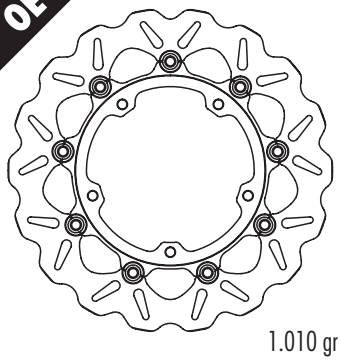

1.010 gr

## GALFER DF 450 W

OE

øext. 245 mm
øint. 86
3,0

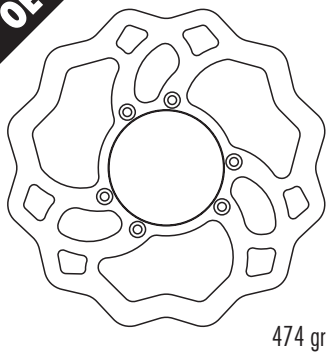

474 gr

## GALFER DF 456 W

OE

øext. 245 mm
øint. 115
5,0

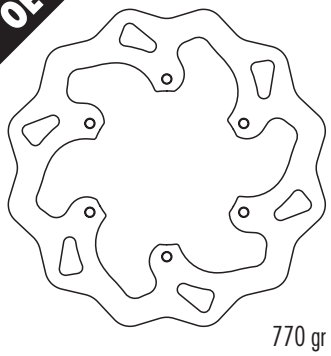

770 gr

## GALFER DF 461 W

OE

øext. 220 mm
øint. 105
4,5

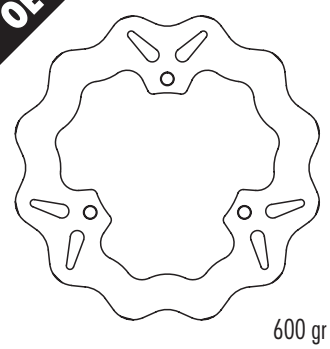

600 gr

## GALFER DF 451 W

OE

øext. 220 mm
øint. 115
4,0

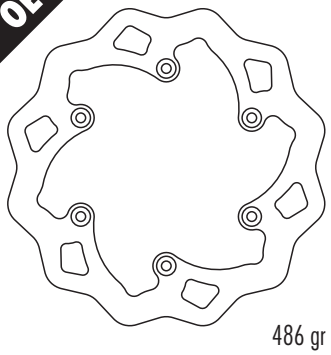

486 gr

## GALFER DF 457 W

OE

øext. 230 mm
øint. 86
3,0

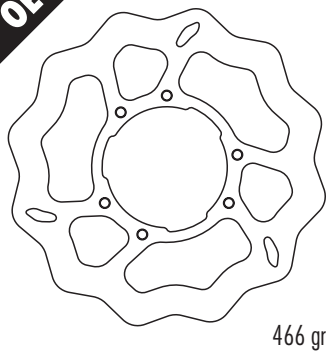

466 gr

## GALFER DF 462 W

OE

øext. 245 mm
øint. 118
3,0

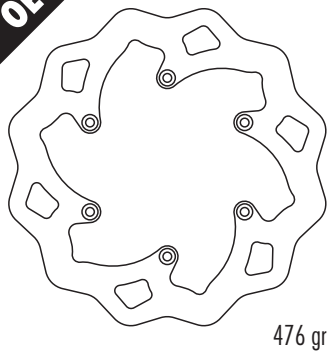

476 gr

**OE:** Original equipment (original replacement disc) - **OE:** Equipo original (disco de remplazo del original)
**OE discs --> W - FLW - CW** **Special discs --> WS - WR - RW - RWS - FLS - FLX - FRS - CRW**

## GALFER DF 463 W

OE

øext. 320 mm
øint. 198
5,0

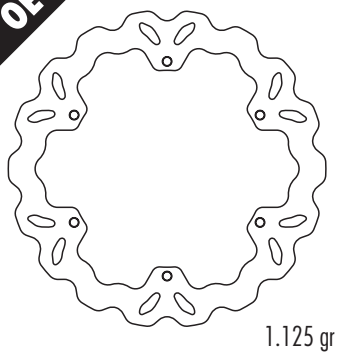

1.125 gr

## GALFER DF 469 W

OE

øext. 245 mm
øint. 132
5,0

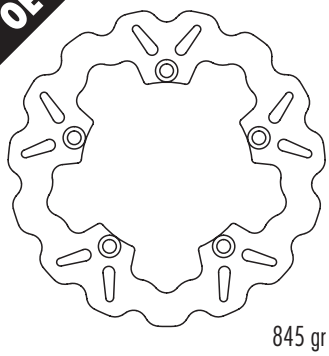

845 gr

## GALFER DF 473 RW

øext. 180 mm
øint. 48
3,5

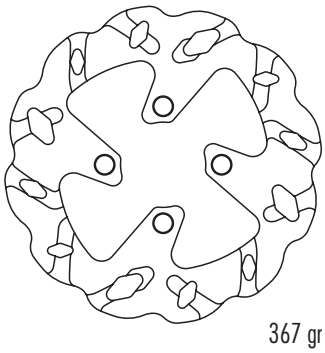

367 gr

## GALFER DF 464 W

OE

øext. 245 mm
øint. 115
3,0

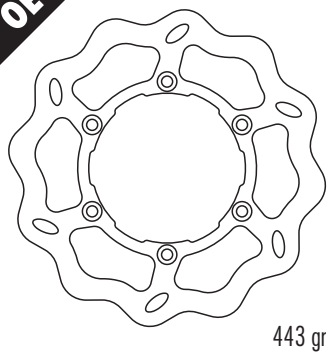

443 gr

## GALFER DF 470 W

OE

øext. 282 mm
øint. 132
4,0

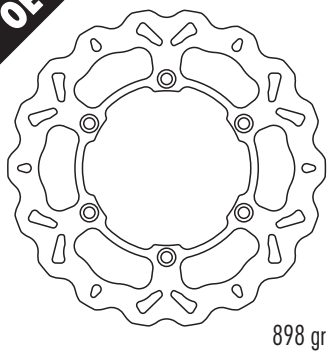

898 gr

## GALFER DF 473 WS

øext. 210 mm
øint. 48
3,5
SP009

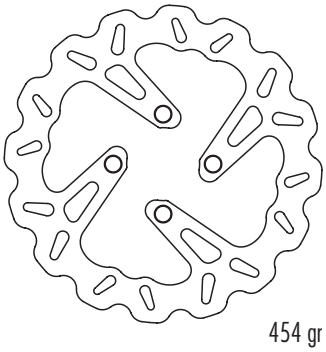

454 gr

## GALFER DF 466 W

OE

øext. 155 mm
øint. 41
3,5

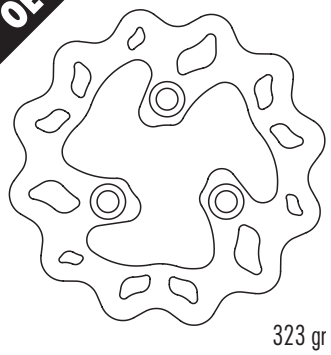

323 gr

## GALFER DF 471 W

OE

øext. 267 mm
øint. 132
5,0

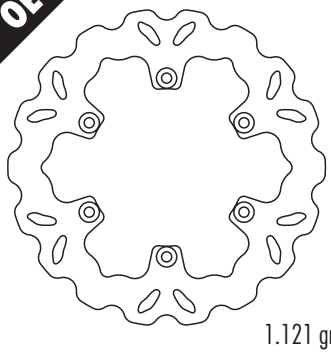

1.121 gr

## GALFER DF 474 CW

OE

øext. 298 mm
øint. 132
5,0
0,0

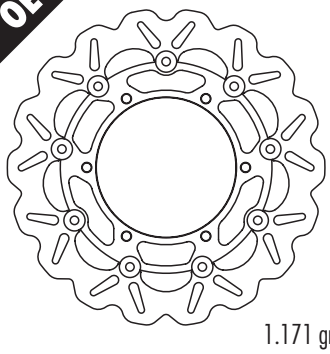

1.171 gr

## GALFER DF 467 W

OE

øext. 220 mm
øint. 86
4,0

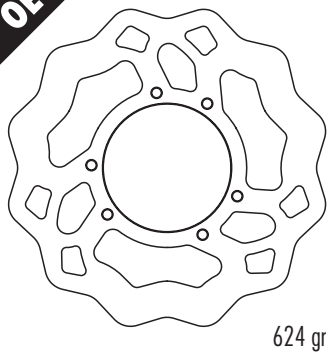

624 gr

## GALFER DF 472 CW

OE

øext. 298 mm
øint. 64
5,0
10,5

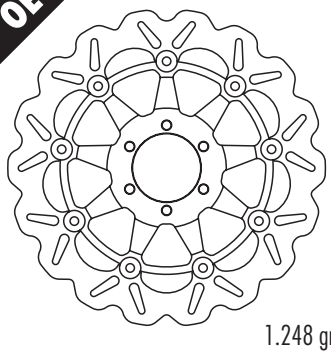

1.248 gr

## GALFER DF 475 CW

øext. 320 mm
øint. 132
5,0
0,0

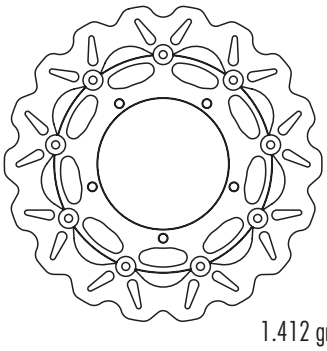

1.412 gr

## GALFER DF 468 W

OE

øext. 210 mm
øint. 84
4,0

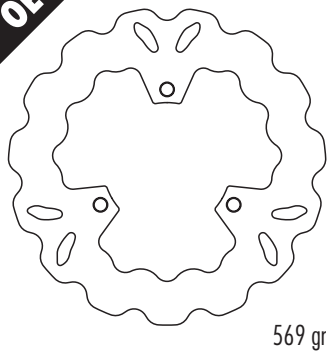

569 gr

## GALFER DF 473 W

OE

øext. 180 mm
øint. 48
3,5

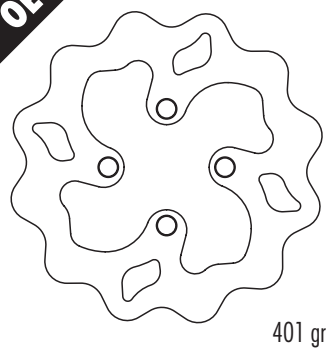

401 gr

## GALFER DF 475 CRWI-D

øext. 320 mm
øint. 132
5,0
0,0

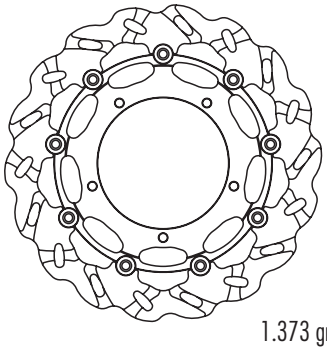

1.373 gr

**OE:** Original equipment (original replacement disc) - **OE:** Equipo original (disco de remplazo del original)
**OE discs --> W - FLW - CW** **Special discs --> WS - WR - RW - RWS - FLS - FLX - FRS - CRW**

## GALFER DF 476 W

OE

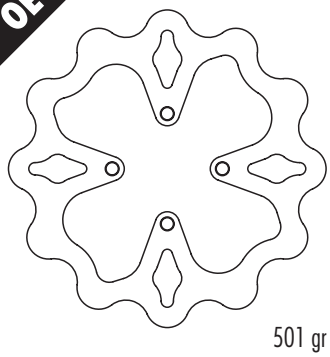

| | |
|---|---|
| øext. | 220 mm |
| øint. | 58,3 |
| | 4,0 |
| | |
| | |

501 gr

## GALFER DF 482 CW

OE

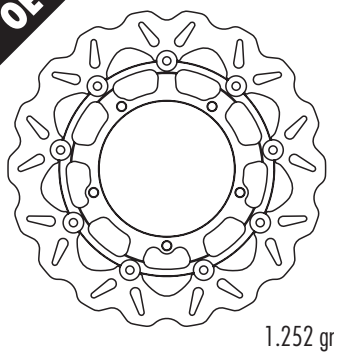

| | |
|---|---|
| øext. | 310 mm |
| øint. | 132 |
| | 5,0 |
| | 0,0 |
| | |

1.252 gr

## GALFER DF 487 W

OE

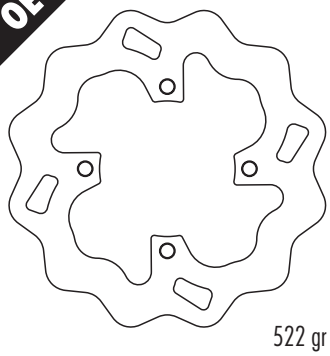

| | |
|---|---|
| øext. | 203 mm |
| øint. | 84 |
| | 4,5 |
| | |
| | |

522 gr

## GALFER DF 477 W

OE

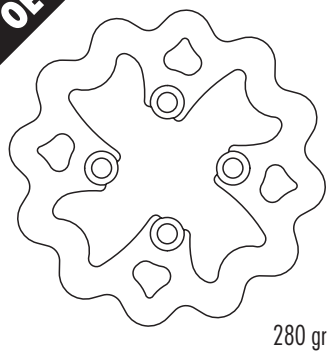

| | |
|---|---|
| øext. | 160 mm |
| øint. | 48,5 |
| | 3,5 |
| | |
| | |

280 gr

## GALFER DF 482 CRWI-D

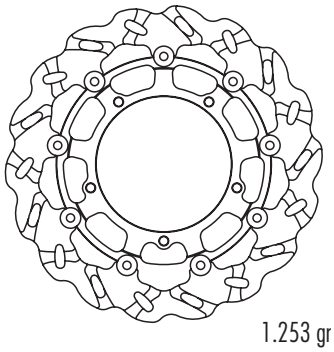

| | |
|---|---|
| øext. | 310 mm |
| øint. | 132 |
| | 5,0 |
| | 0,0 |
| | |

1.253 gr

## GALFER DF 488 W

OE

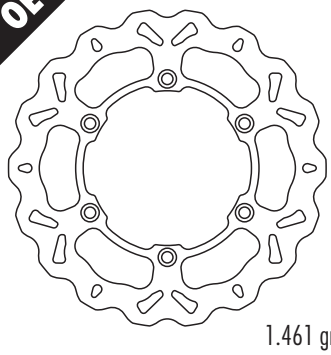

| | |
|---|---|
| øext. | 298 mm |
| øint. | 132 |
| | 5,0 |
| | |
| | |

1.461 gr

## GALFER DF 478 W

OE

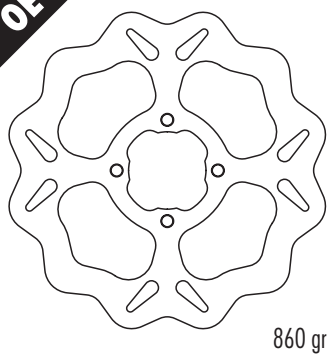

| | |
|---|---|
| øext. | 244,5 mm |
| øint. | 58 |
| | 4,0 |
| | |
| | |

860 gr

## GALFER DF 484 W

OE

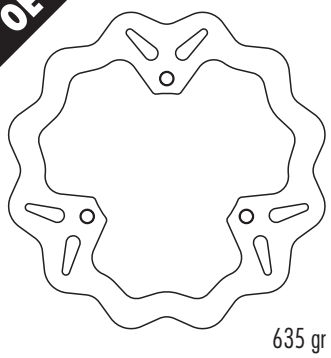

| | |
|---|---|
| øext. | 230 mm |
| øint. | 116 |
| | 5,0 |
| | |
| | |

635 gr

## GALFER DF 489 W

OE

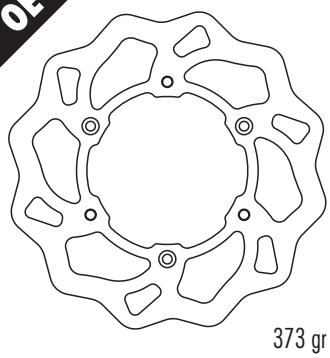

| | |
|---|---|
| øext. | 220 mm |
| øint. | 100 |
| | 3,0 |
| | |
| | |

373 gr

## GALFER DF 479 W

OE

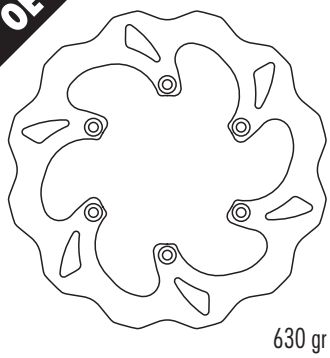

| | |
|---|---|
| øext. | 240 mm |
| øint. | 115 |
| | 4,0 |
| | |
| | |

630 gr

## GALFER DF 485 W

OE

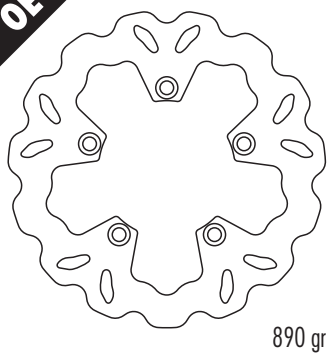

| | |
|---|---|
| øext. | 245 mm |
| øint. | 105 |
| | 5,0 |
| | |
| | |

890 gr

## GALFER DF 490 W

OE

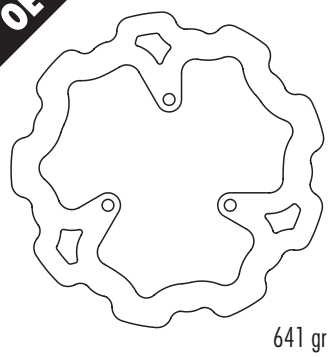

| | |
|---|---|
| øext. | 230 mm |
| øint. | 84 |
| | 5,0 |
| | |
| | |

641 gr

## GALFER DF 481 CW

OE

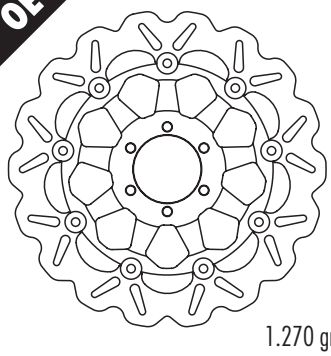

| | |
|---|---|
| øext. | 298 mm |
| øint. | 64 |
| | 5,0 |
| | 18,5 |
| | |

1.270 gr

## GALFER DF 486 W

OE

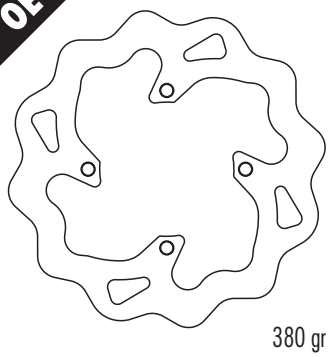

| | |
|---|---|
| øext. | 220 mm |
| øint. | 92 |
| | 3,0 |
| | |
| | |

380 gr

## GALFER DF 491 W

OE

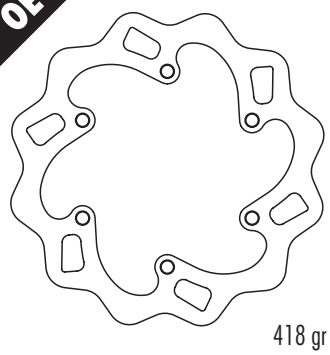

| | |
|---|---|
| øext. | 220 mm |
| øint. | 116 |
| | 5,0 |
| | |
| | |

418 gr

**OE:** Original equipment (original replacement disc) - **OE:** Equipo original (disco de remplazo del original)
**OE discs --> W - FLW - CW** **Special discs --> WS - WR - RW - RWS - FLS - FLX - FRS - CRW**

## GALFER DF 492 W

OE

| | |
|---|---|
| øext. | 220 mm |
| øint. | 54 |
| | 4,0 |

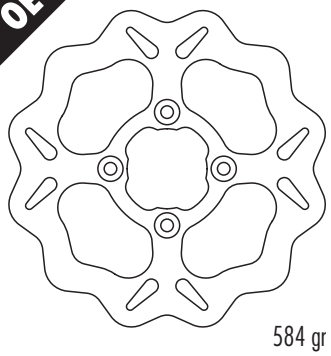

584 gr

## GALFER DF 496 W

OE

| | |
|---|---|
| øext. | 220 mm |
| øint. | 105 |
| | 4,5 |

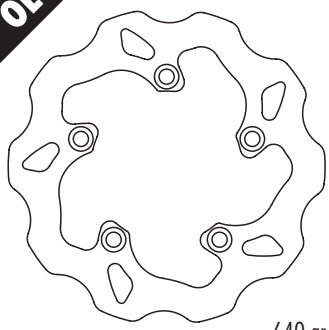

640 gr

## GALFER DF 499 WLL

| | |
|---|---|
| øext. | 245 mm |
| øint. | 115 |
| | 4,0 |

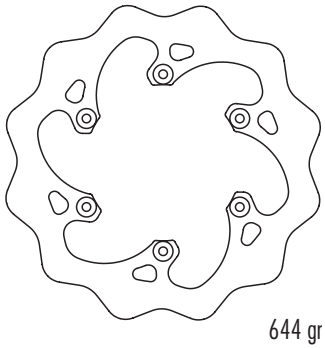

644 gr

## GALFER DF 493 W

OE

| | |
|---|---|
| øext. | 282 mm |
| øint. | 132 |
| | 4,0 |

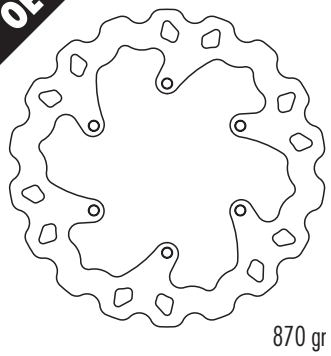

870 gr

## GALFER DF 497 W

OE

| | |
|---|---|
| øext. | 190 mm |
| øint. | 85 |
| | 3,0 |

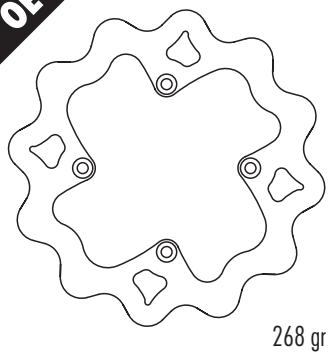

268 gr

## GALFER DF 499 RW

| | |
|---|---|
| øext. | 245 mm |
| øint. | 115 |
| | 4,0 |

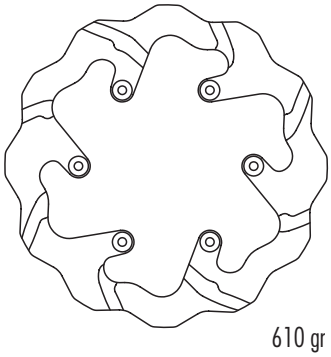

610 gr

## GALFER DF 494 W

OE

| | |
|---|---|
| øext. | 267 mm |
| øint. | 132 |
| | 4,5 |

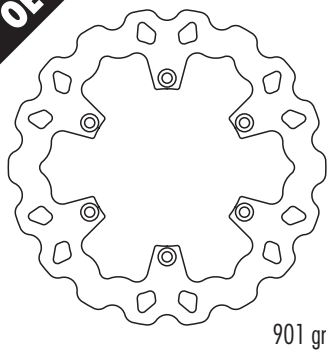

901 gr

## GALFER DF 498 CW

OE

| | |
|---|---|
| øext. | 320 mm |
| øint. | 132 |
| | 5,0 |
| | 0,0 |

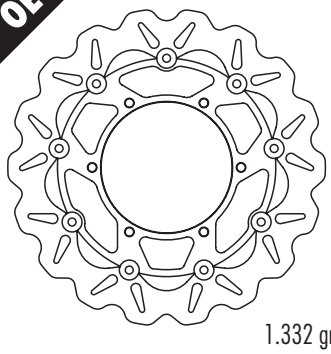

1.332 gr

## GALFER DF 500 W

OE

| | |
|---|---|
| øext. | 267 mm |
| øint. | 132 |
| | 5,0 |

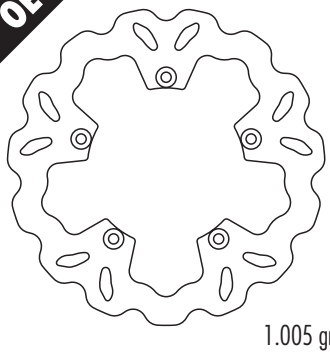

1.005 gr

## GALFER DF 495 CW

OE

| | |
|---|---|
| øext. | 298 mm |
| øint. | 132 |
| | 5,0 |
| | 0,0 |

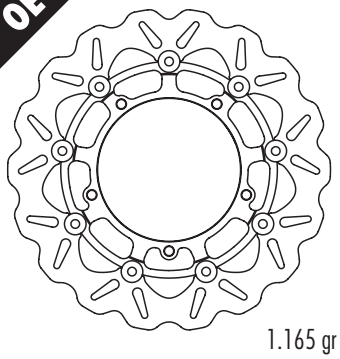

1.165 gr

## GALFER DF 498 CRWI-D

| | |
|---|---|
| øext. | 320 mm |
| øint. | 132 |
| | 5,0 |
| | 0,0 |

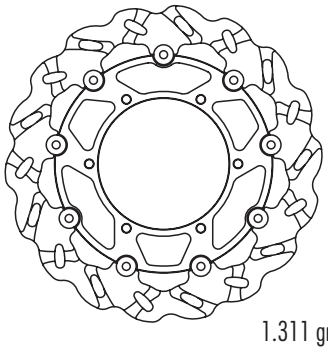

1.311 gr

## GALFER DF 501 W

OE

| | |
|---|---|
| øext. | 267 mm |
| øint. | 132 |
| | 5,0 |

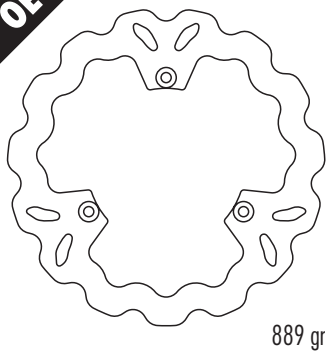

889 gr

## GALFER DF 495 CRWI-D

| | |
|---|---|
| øext. | 298 mm |
| øint. | 132 |
| | 5,0 |
| | 0,0 |

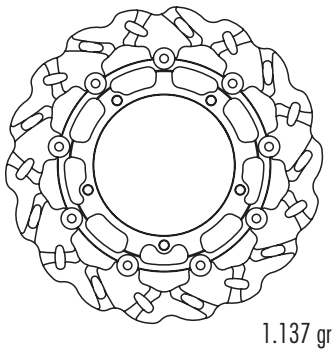

1.137 gr

## GALFER DF 499 W

OE

| | |
|---|---|
| øext. | 245 mm |
| øint. | 115 |
| | 4,0 |

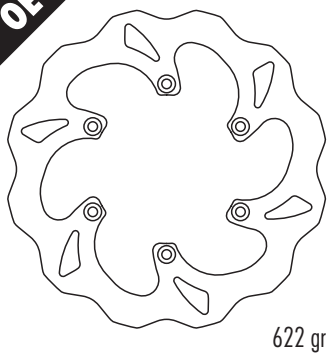

622 gr

## GALFER DF 502 W

OE

| | |
|---|---|
| øext. | 245 mm |
| øint. | 108 |
| | 4,0 |

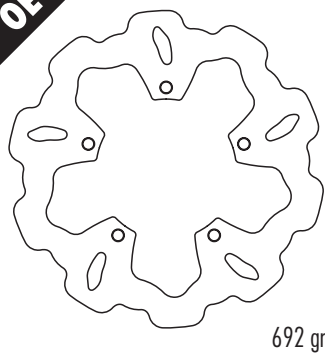

692 gr

**OE:** Original equipment (original replacement disc) - **OE:** Equipo original (disco de remplazo del original)
**OE discs --> W - FLW - CW** **Special discs --> WS - WR - RW - RWS - FLS - FLX - FRS - CRW**

## GALFER DF 503 FLW
OE
øext. 267 mm
øint. 132
4,0
979 gr

## GALFER DF 512 CW
OE
øext. 267 mm
øint. 58
4,0
785 gr

## GALFER DF 524 W
OE
øext. 240 mm
øint. 92
5,0
897 gr

## GALFER DF 504 W
OE
øext. 220 mm
øint. 82
4,0
605 gr

## GALFER DF 512 WS
øext. 300 mm
øint. 59
4,0
SP
1.122 gr

## GALFER DF 525 FLW
OE
øext. 267 mm
øint. 132
4,0
961 gr

## GALFER DF 504 FLS
øext. 260 mm
øint. 82
4,0
SP015
800 gr

## GALFER DF 519 CWI-D
OE
øext. 310 mm
øint. 132
5,0
0,0
1.220 gr

## GALFER DF 526 W
OE
øext. 292 mm
øint. 155
4,0
723 gr

## GALFER DF 509 W
OE
øext. 245 mm
øint. 82
4,0
690 gr

## GALFER DF 520 CWI-D
OE
øext. 310 mm
øint. 132
5,0
0,0
1.290 gr

## GALFER DF 527 W
OE
øext. 230 mm
øint. 102
4,0
605 gr

## GALFER DF 511 W
OE
øext. 245 mm
øint. 115
5,0
840 gr

## GALFER DF 520 CRWI-D
øext. 310 mm
øint. 132
5,0
0,0
1.240 gr

## GALFER DF 528 W
OE
øext. 282 mm
øint. 131,5
5,0
1.137 gr

**OE:** Original equipment (original replacement disc) - **OE:** Equipo original (disco de remplazo del original)
**OE discs --> W - FLW - CW** **Special discs --> WS - WR - RW - RWS - FLS - FLX - FRS - CRW**

## GALFER DF 530 W

OE

øext. 203 mm
øint. 48
4,0

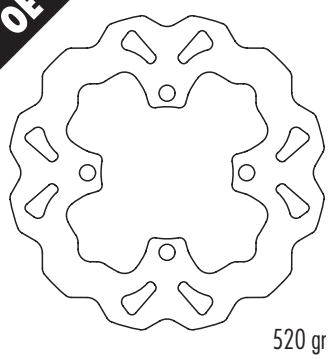

520 gr

## GALFER DF 606 W

OE

øext. 260 mm
øint. 127
3,0

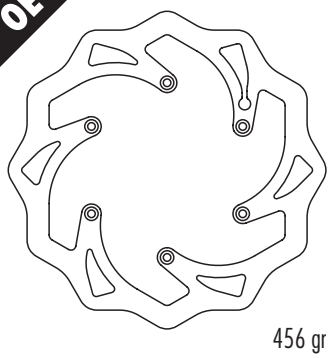

456 gr

## GALFER DF 606 FLW

OE

øext. 260 mm
øint. 127
3,0

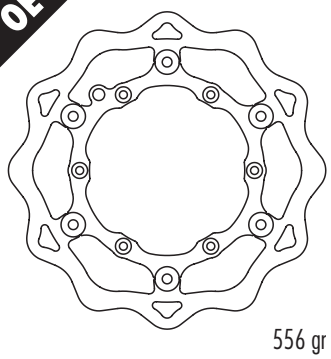

556 gr

## GALFER DF 606 RW

øext. 260 mm
øint. 127
3,0

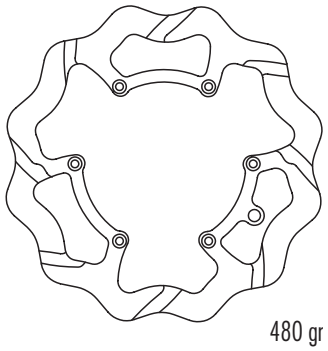

480 gr

## GALFER DF 606 WS

øext. 270 mm
øint. 127
3,0
SP021/41

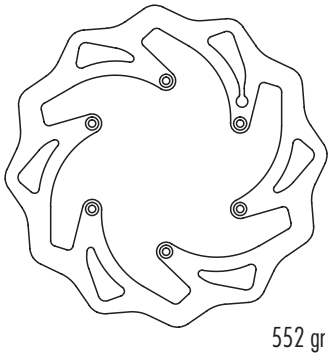

552 gr

## GALFER DF 606 RWS

øext. 270 mm
øint. 127
3,0
SP021/41

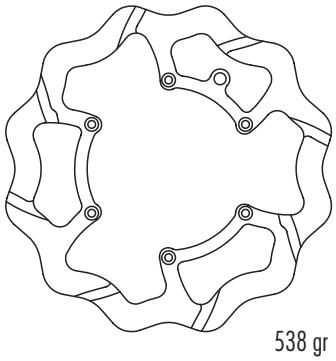

538 gr

## GALFER DF 606 FLS

øext. 270 mm
øint. 127
3,0
SP021/41

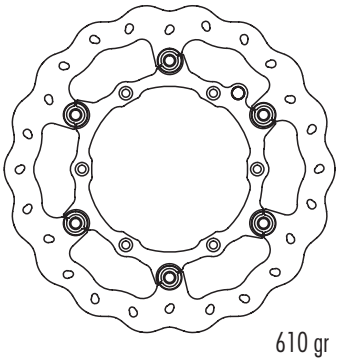

610 gr

## GALFER DF 606 FRS

øext. 270 mm
øint. 127
3,0
SP021/41

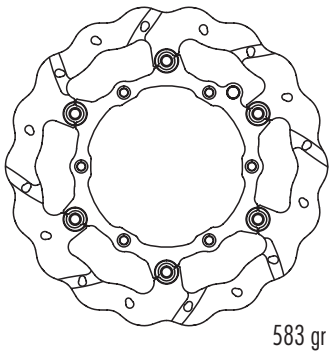

583 gr

## GALFER DF 607 W

OE

øext. 220 mm
øint. 110
4,0

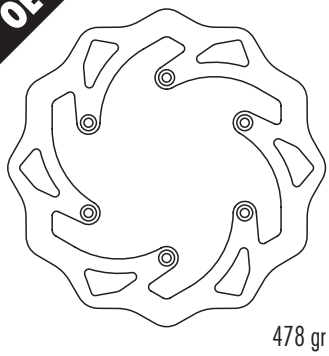

478 gr

## GALFER DF 607 WLL

øext. 220 mm
øint. 110
4,0

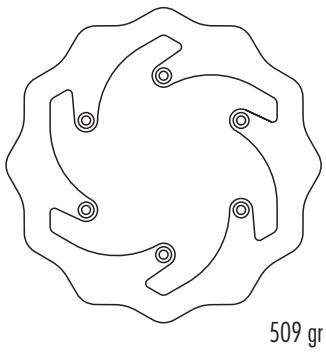

509 gr

## GALFER DF 607 WS

øext. 240 mm
øint. 110
4,0
SP

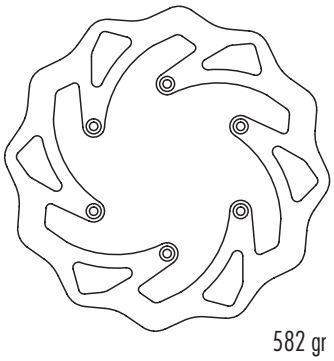

582 gr

## GALFER DF 607 RW

øext. 220 mm
øint. 110
4,0

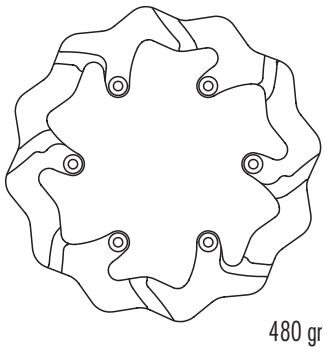

480 gr

## GALFER DF 607 RWS

øext. 240 mm
øint. 110
4,0
SP

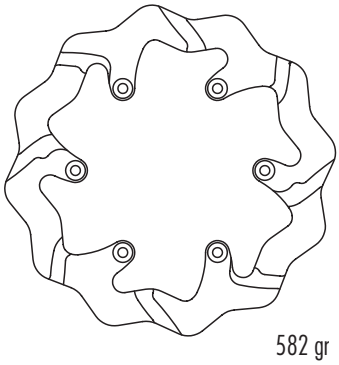

582 gr

## GALFER DF 609 W

OE

øext. 220 mm
øint. 96
3,5

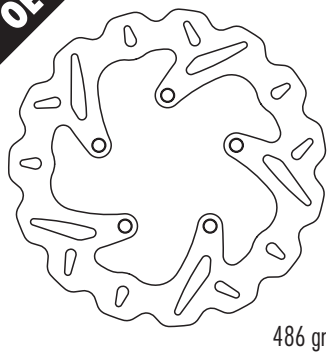

486 gr

## GALFER DF 612 W

OE

øext. 220 mm
øint. 60
4,0

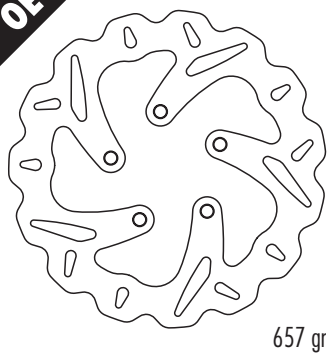

657 gr

**OE:** Original equipment (original replacement disc) - **OE:** Equipo original (disco de remplazo del original)
**OE discs --> W - FLW - CW** **Special discs --> WS - WR - RW - RWS - FLS - FLX - FRS - CRW**

## GALFER DF 621 W
OE
øext. 240 mm
øint. 90
4,0
662 gr

## GALFER DF 629 W
OE
øext. 190 mm
øint. 58
3,6
421 gr

## GALFER DF 632 W
OE
øext. 220 mm
øint. 110
4,0
538 gr

## GALFER DF 622 W
OE
øext. 220 mm
øint. 90
4,0
631 gr

## GALFER DF 629 RW
øext. 190 mm
øint. 58
3,6
376 gr

## GALFER DF 635 FLW
OE
øext. 260 mm
øint. 120
3,0
531 gr

## GALFER DF 624 W
OE
øext. 174 mm
øint. 38
3,0
363 gr

## GALFER DF 629 FLS
øext. 220 mm
øint. 58
3,0
SP009
524 gr

## GALFER DF 635 FLS
øext. 270 mm
øint. 120
3,0
SP021
610 gr

## GALFER DF 625 W
OE
øext. 174 mm
øint. 66
3,5
377 gr

## GALFER DF 630 W
OE
øext. 220 mm
øint. 108
4,0
502 gr

## GALFER DF 635 FRS
øext. 270 mm
øint. 120
3,0
SP021
656 gr

## GALFER DF 626 FLW
OE
øext. 260 mm
øint. 120
3,0
635 gr

## GALFER DF 631 CW
OE
øext. 305 mm
øint. 118
5,0
0,0
1.377 gr

## GALFER DF 636 W
OE
øext. 245 mm
øint. 115
4,5
730 gr

**OE:** Original equipment (original replacement disc) - **OE:** Equipo original (disco de remplazo del original)
**OE discs --> W - FLW - CW** **Special discs --> WS - WR - RW - RWS - FLS - FLX - FRS - CRW**

## GALFER DF 637 W

OE

øext. 198 mm
øint. 89
3,0
322 gr

## GALFER DF 648 W

OE

øext. 190 mm
øint. 68
4,0
428 gr

## GALFER DF 651 CW

OE

øext. 310 mm
øint. 118
5,0
12,5
1.395 gr

## GALFER DF 638 W

OE

øext. 220 mm
øint. 112
4,0
586 gr

## GALFER DF 648 RW

øext. 190 mm
øint. 68
4,0
421 gr

## GALFER DF 652 CW

OE

øext. 296 mm
øint. 118
5,0
12,5
1.187 gr

## GALFER DF 639 W

OE

øext. 160 mm
øint. 45
3,0
257 gr

## GALFER DF 649 W

OE

øext. 190 mm
øint. 58
3,7
460 gr

## GALFER DF 653 CW

OE

øext. 320 mm
øint. 78
5,0
10,5
1.386 gr

## GALFER DF 642 W

OE

øext. 155 mm
øint. 39
3,0
275 gr

## GALFER DF 650 W

OE

øext. 200 mm
øint. 98
4,0
493 gr

## GALFER DF 655 CW

OE

øext. 320 mm
øint. 78
5,0
14,5
1.410 gr

## GALFER DF 645 CW

OE

øext. 320 mm
øint. 120
5,0
9,0
1.385 gr

## GALFER DF 650 RW

øext. 200 mm
øint. 98
4,0
431 gr

## GALFER DF 658 W

OE

øext. 240 mm
øint. 108
3,5
1.200 gr

**OE:** Original equipment (original replacement disc) - **OE:** Equipo original (disco de remplazo del original)
**OE discs --> W - FLW - CW** **Special discs --> WS - WR - RW - RWS - FLS - FLX - FRS - CRW**

## GALFER DF 660 CW

OE

øext. 320 mm
øint. 64
5,0
10,5

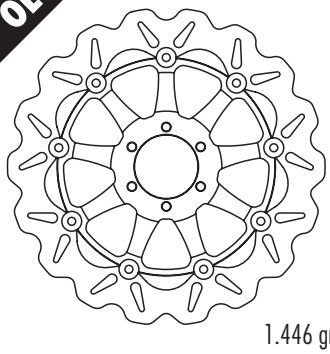

1.446 gr

## GALFER DF 660 CRWI-D

øext. 320 mm
øint. 64
5,0
10,5

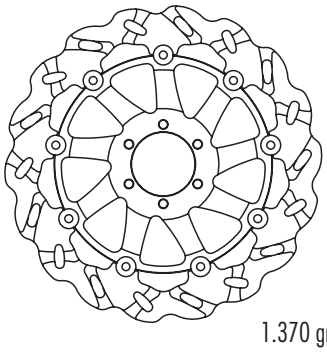

1.370 gr

## GALFER DF 661 CW

OE

øext. 320 mm
øint. 78
4,5
17,5

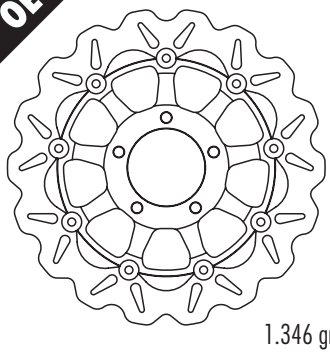

1.346 gr

## GALFER DF 661 CRWI-D

øext. 320 mm
øint. 78
4,5
17,5

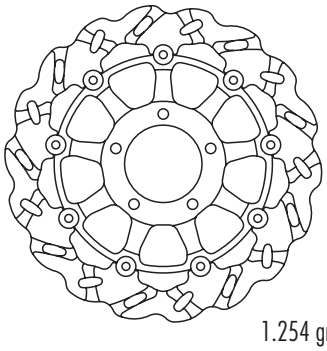

1.254 gr

## GALFER DF 662 W

OE

øext. 285 mm
øint. 164
5,0

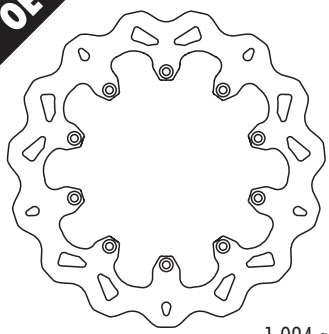

1.094 gr

## GALFER DF 663 FLW

OE

øext. 298 mm
øint. 105
4,0

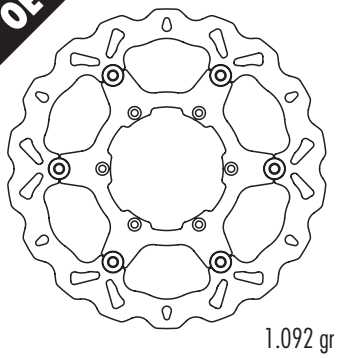

1.092 gr

## GALFER DF 664 CWI-D

OE

øext. 300 mm
øint. 105
5,0
0,0

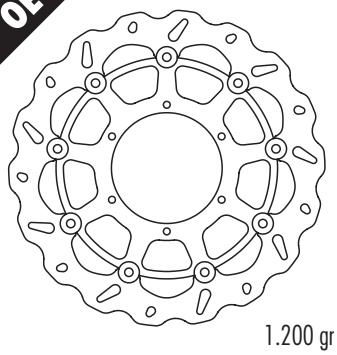

1.200 gr

## GALFER DF 666 W

OE

øext. 240 mm
øint. 125,5
4,0

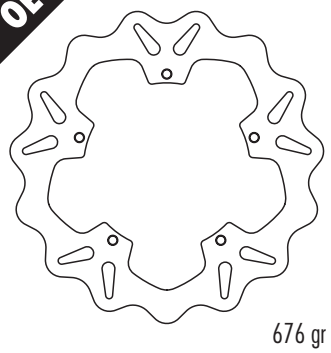

676 gr

## GALFER DF 667 W

OE

øext. 260 mm
øint. 125,5
4,0

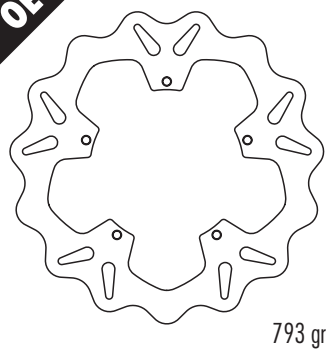

793 gr

## GALFER DF 668 W

OE

øext. 172 mm
øint. 64,4
3,2

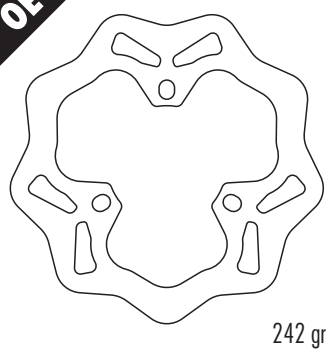

242 gr

## GALFER DF 669 W

OE

øext. 220 mm
øint. 102
4,0

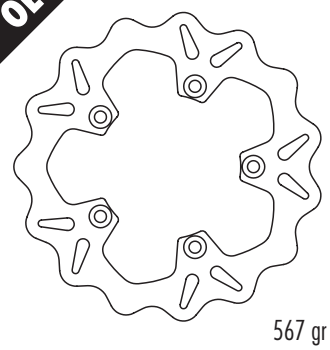

567 gr

## GALFER DF 670 W

OE

øext. 240 mm
øint. 112
4,0

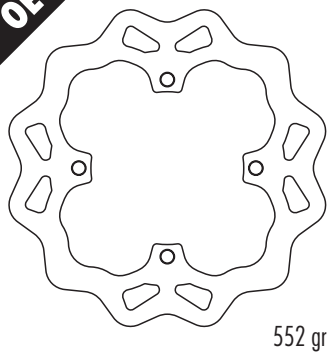

552 gr

## GALFER DF 670 PW

øext. 240 mm
øint. 127
4,0

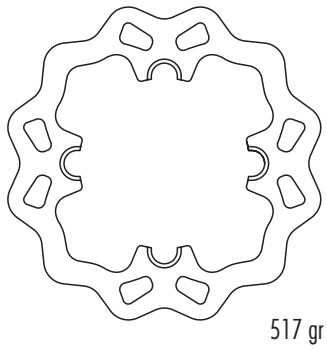

517 gr

## GALFER DF 670 WLL

øext. 240 mm
øint. 112
4,0

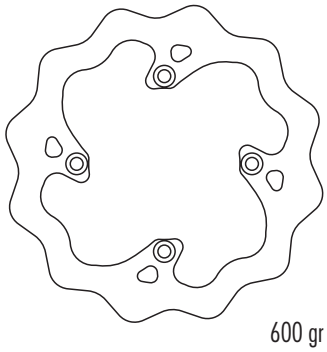

600 gr

## GALFER DF 671 W

OE

øext. 260 mm
øint. 60
4,0

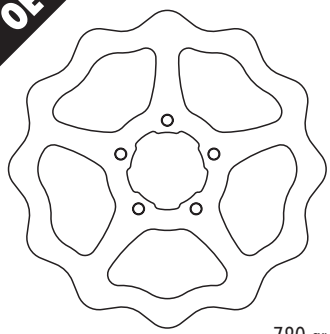

780 gr

**OE:** Original equipment (original replacement disc) - **OE:** Equipo original (disco de remplazo del original)
**OE discs --> W - FLW - CW** **Special discs --> WS - WR - RW - RWS - FLS - FLX - FRS - CRW**

## GALFER DF 671 FLW

OE

øext. 260 mm
øint. 60
4,0

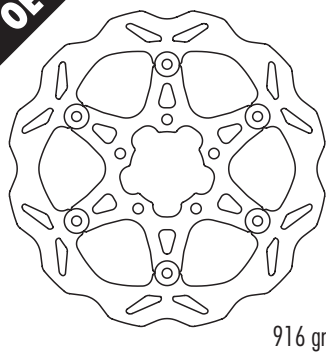

916 gr

## GALFER DF 675 W

OE

øext. 200 mm
øint. 63
4,0

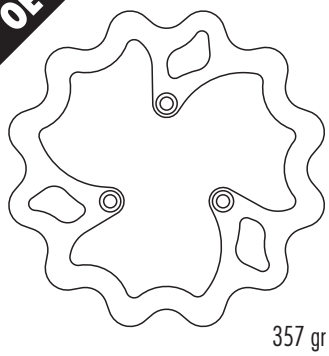

357 gr

## GALFER DF 677 FRS

øext. 270 mm
øint. 108
3,0
SP027

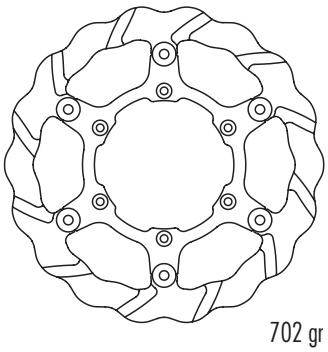

702 gr

## GALFER DF 672 FLW

OE

øext. 300 mm
øint. 127
4,0

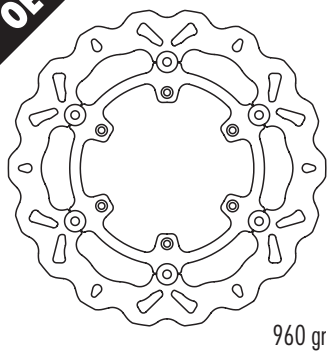

960 gr

## GALFER DF 676 CW

OE

øext. 296 mm
øint. 62
5,0
17,0

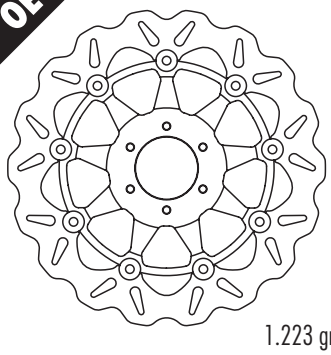

1.223 gr

## GALFER DF 677 CW

øext. 320 mm
øint. 108
5,0
0,0
SP

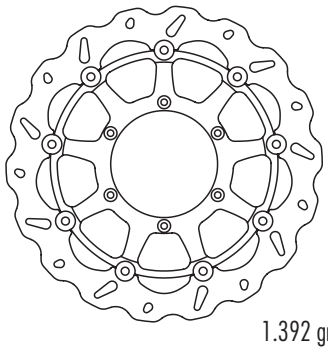

1.392 gr

## GALFER DF 673 W

OE

øext. 250 mm
øint. 108
3,5

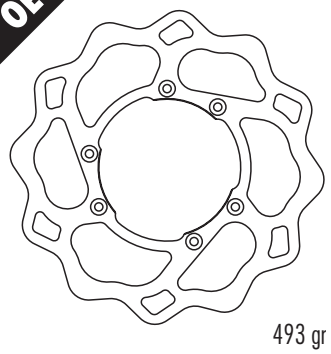

493 gr

## GALFER DF 677 W

OE

øext. 260 mm
øint. 108
3,5

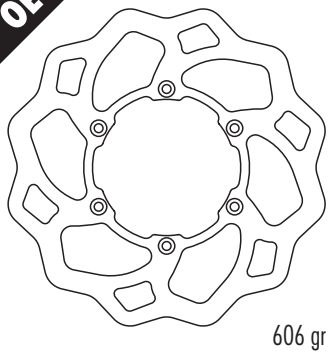

606 gr

## GALFER DF 678 WLL

OE

øext. 220 mm
øint. 108
4,0

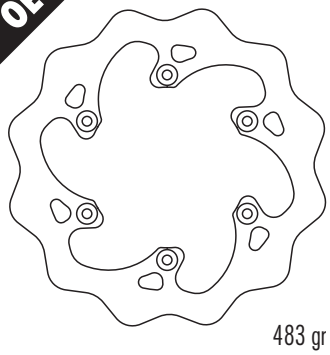

483 gr

## GALFER DF 674 W

OE

øext. 260 mm
øint. 108
4,0

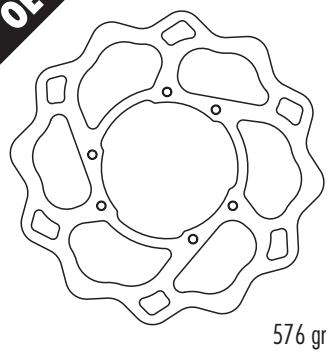

576 gr

## GALFER DF 677 FLW

OE

øext. 260 mm
øint. 108
3,0

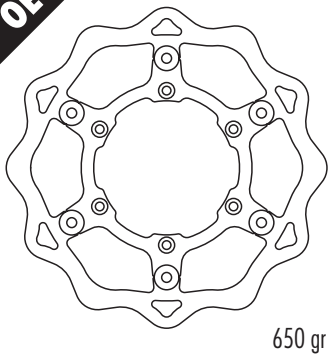

650 gr

## GALFER DF 678 WS

øext. 240 mm
øint. 108
4,0
SP

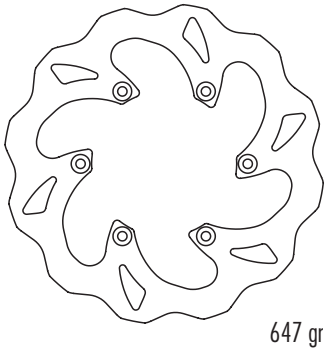

647 gr

## GALFER DF 674 FLW

OE

øext. 260 mm
øint. 108
3,0

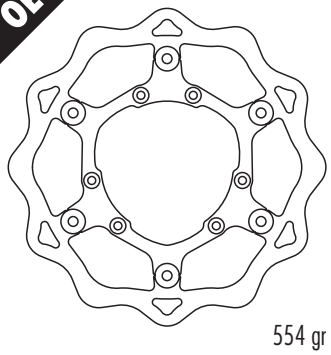

554 gr

## GALFER DF 677 FLS

øext. 270 mm
øint. 108
3,0
SP027

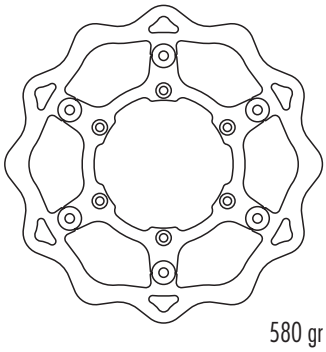

580 gr

## GALFER DF 679 W

OE

øext. 292 mm
øint. 50,5
5,0

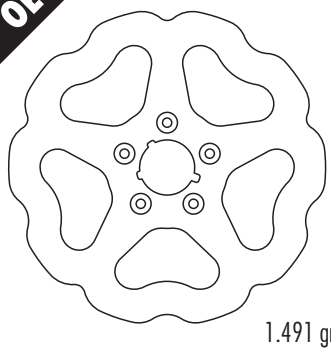

1.491 gr

**OE:** Original equipment (original replacement disc) - **OE:** Equipo original (disco de remplazo del original)
**OE discs --> W - FLW - CW** **Special discs --> WS - WR - RW - RWS - FLS - FLX - FRS - CRW**

## GALFER DF 680 W
OE
øext. 292 mm
øint. 56
5,0
1.625 gr

## GALFER DF 683 W
OE
øext. 280 mm
øint. 108
4,0
882 gr

## GALFER DF 689 W
OE
øext. 160 mm
øint. 45
3,0
234 gr

## GALFER DF 680 FLW
OE
øext. 292 mm
øint. 56
5,0
1.667 gr

## GALFER DF 684 W
OE
øext. 220 mm
øint. 57
4,0
686 gr

## GALFER DF 690 CW
OE
øext. 310 mm
øint. 64
5,0
22,5
1.432 gr

## GALFER DF 680 CW
OE
øext. 292 mm
øint. 56
5,0
1.195 gr

## GALFER DF 685 W
OE
øext. 219 mm
øint. 95
3,0
350 gr

## GALFER DF 690 CRWI-D
øext. 310 mm
øint. 64
5,0
22,5
1.290 gr

## GALFER DF 681 W
OE
øext. 292 mm
øint. 56
5,0
1.625 gr

## GALFER DF 686 W
OE
øext. 201 mm
øint. 110
3,0
250 gr

## GALFER DF 691 FLW
OE
øext. 254 mm
øint. 50,7
5,0
1.267 gr

## GALFER DF 682 W
OE
øext. 292 mm
øint. 50,5
5,0
1.600 gr

## GALFER DF 688 W
OE
øext. 198 mm
øint. 89
3,0
314 gr

## GALFER DF 692 CW
OE
øext. 310 mm
øint. 58
5,0
17,0
1.404 gr

**OE:** Original equipment (original replacement disc) - **OE:** Equipo original (disco de remplazo del original)
**OE discs --> W - FLW - CW** **Special discs --> WS - WR - RW - RWS - FLS - FLX - FRS - CRW**

## GALFER DF 698 W

OE

| | |
|---|---|
| øext. | 218 mm |
| øint. | 62 |
| | 3,5 |

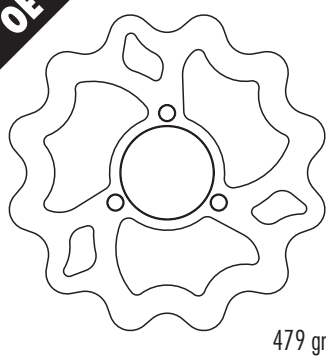

479 gr

## GALFER DF 702 W

OE

INCLUDE PINS

| | |
|---|---|
| øext. | 305 mm |
| øint. | 181 |
| | 4,5 |

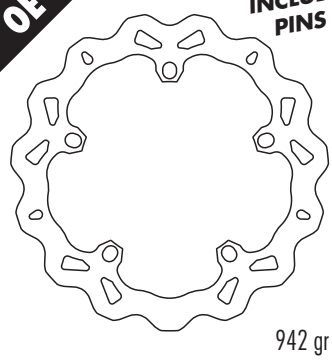

942 gr

## GALFER DF 706 W

OE

| | |
|---|---|
| øext. | 240 mm |
| øint. | 107 |
| | 4,0 |

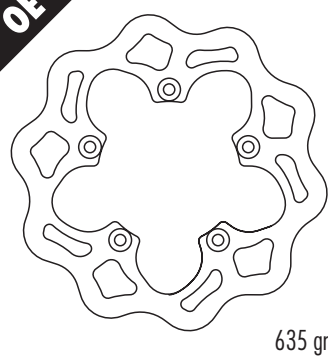

635 gr

## GALFER DF 699 W

OE

| | |
|---|---|
| øext. | 290 mm |
| øint. | 108 |
| | 3,5 |

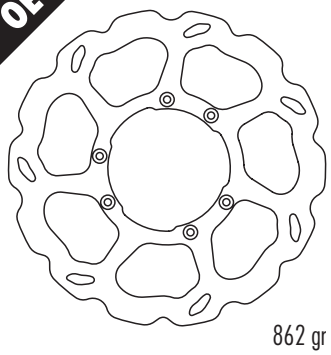

862 gr

## GALFER DF 703 W

OE

| | |
|---|---|
| øext. | 240 mm |
| øint. | 110 |
| | 5,0 |

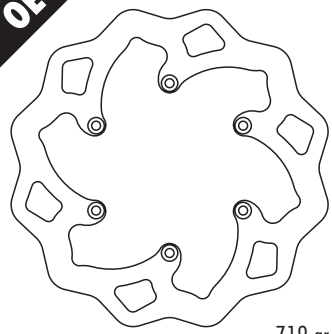

719 gr

## GALFER DF 707 W

OE

INCLUDE PINS

| | |
|---|---|
| øext. | 320 mm |
| øint. | 181 |
| | 4,5 |

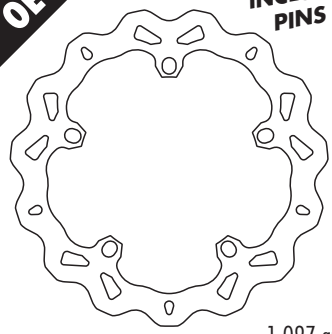

1.097 gr

## GALFER DF 699 FLW

OE

| | |
|---|---|
| øext. | 290 mm |
| øint. | 108 |
| | 4,0 |

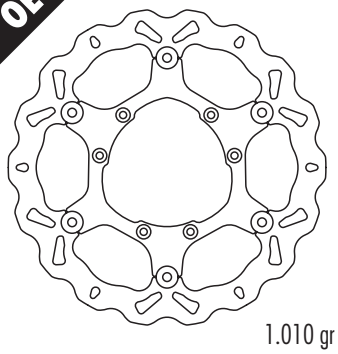

1.010 gr

## GALFER DF 704 W

OE

| | |
|---|---|
| øext. | 220 mm |
| øint. | 105 |
| | 4,0 |

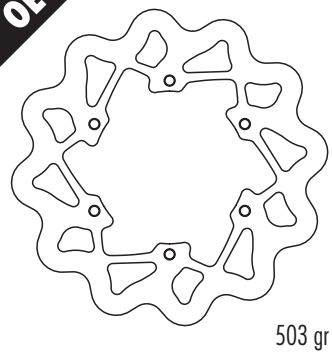

503 gr

## GALFER DF 708 WI-D

OE

| | |
|---|---|
| øext. | 240 mm |
| øint. | 125 |
| | 3,5 |

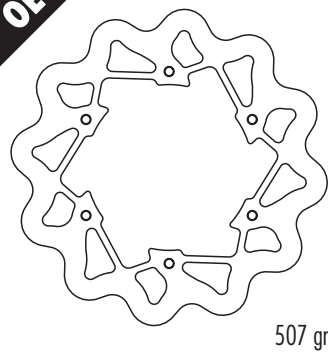

507 gr

## GALFER DF 700 W

OE

| | |
|---|---|
| øext. | 180 mm |
| øint. | 62 |
| | 3,5 |

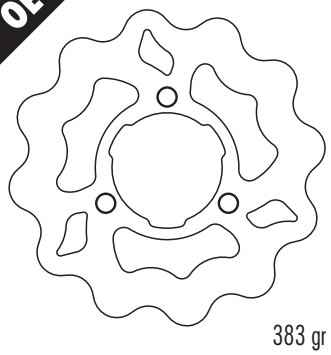

383 gr

## GALFER DF 704 FLW

OE

| | |
|---|---|
| øext. | 220 mm |
| øint. | 105 |
| | 4,0 |

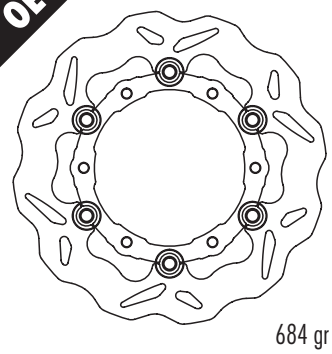

684 gr

## GALFER DF 709 W

OE

| | |
|---|---|
| øext. | 218 mm |
| øint. | 57 |
| | 3,5 |

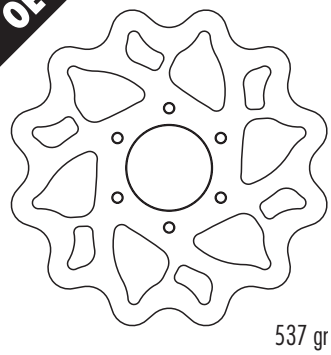

537 gr

## GALFER DF 701 W

OE

| | |
|---|---|
| øext. | 276 mm |
| øint. | 174 |
| | 5,0 |

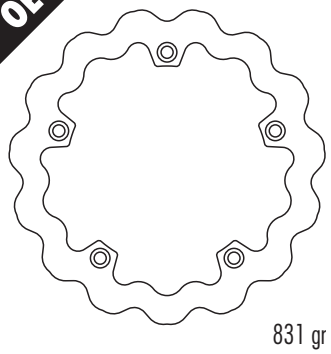

831 gr

## GALFER DF 705 W

OE

| | |
|---|---|
| øext. | 175 mm |
| øint. | 73 |
| | 4,0 |

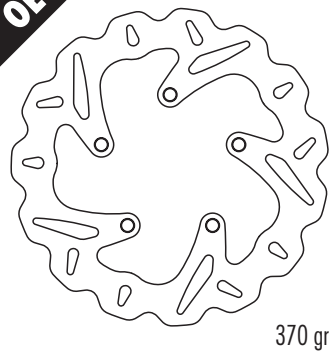

370 gr

## GALFER DF 710 FLW

OE

| | |
|---|---|
| øext. | 260 mm |
| øint. | 105,5 |
| | 3,0 |

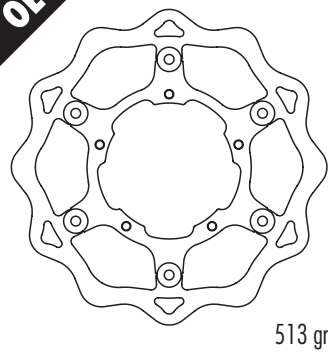

513 gr

**OE:** Original equipment (original replacement disc) - **OE:** Equipo original (disco de remplazo del original)
**OE discs --> W - FLW - CW** **Special discs --> WS - WR - RW - RWS - FLS - FLX - FRS - CRW**

## GALFER DF 710 FLS

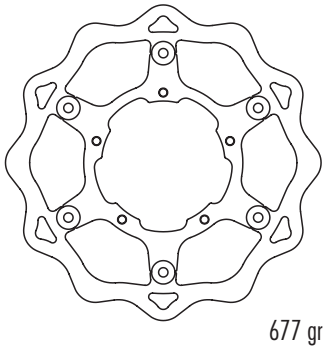

øext. 270 mm
øint. 105,5
3,0
SP021
677 gr

## GALFER DF 713 W

OE

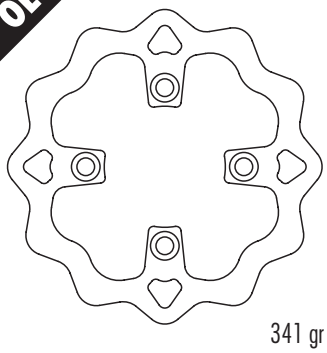

øext. 187 mm
øint. 72
4,0
341 gr

## GALFER DF 718 W

OE

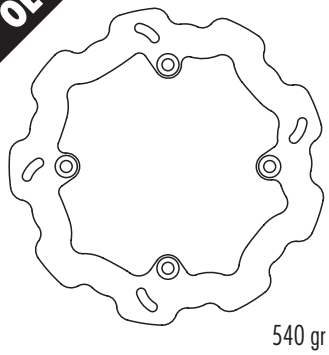

øext. 218,5 mm
øint. 121,5
4,0
540 gr

## GALFER DF 710 FRS

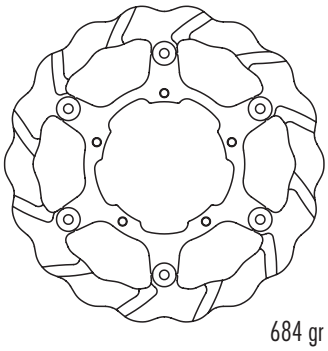

øext. 270 mm
øint. 105,5
3,0
SP021
684 gr

## GALFER DF 714 W

OE

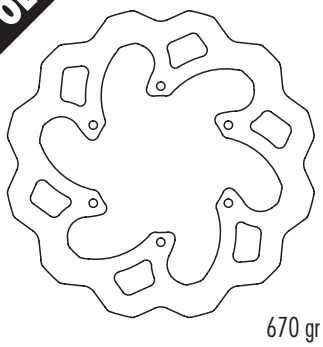

øext. 240 mm
øint. 105
4,0
670 gr

## GALFER DF 719 W

OE

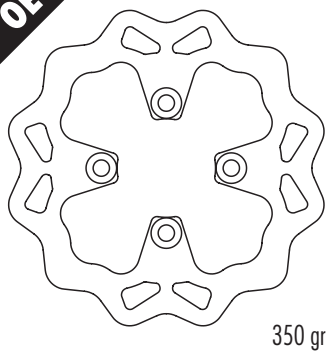

øext. 165 mm
øint. 48,5
4,0
350 gr

## GALFER DF 711 W

OE

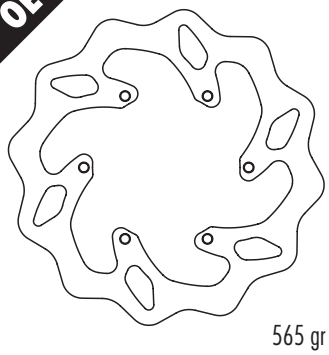

øext. 220 mm
øint. 102
4,0
565 gr

## GALFER DF 715 W

OE

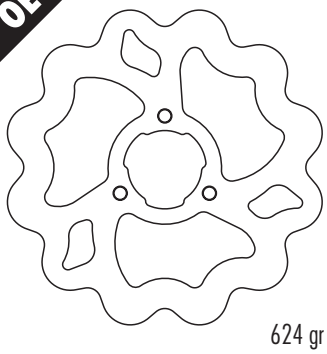

øext. 220 mm
øint. 50
4,0
624 gr

## GALFER DF 720 W

OE

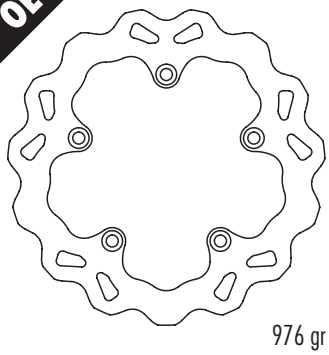

øext. 276 mm
øint. 136,5
5,0
976 gr

## GALFER DF 711 WLL

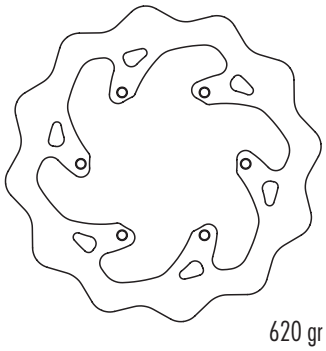

øext. 220 mm
øint. 102
4,0
620 gr

## GALFER DF 716 W

OE

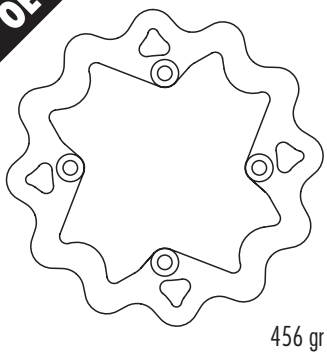

øext. 218,5 mm
øint. 110,5
4,4
456 gr

## GALFER DF 722 W

OE

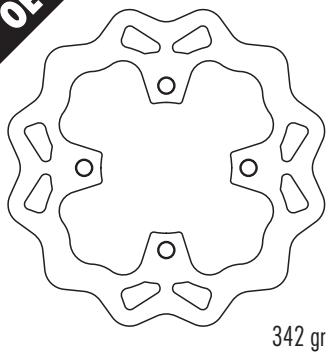

øext. 183 mm
øint. 73
4,0
342 gr

## GALFER DF 712 W

OE

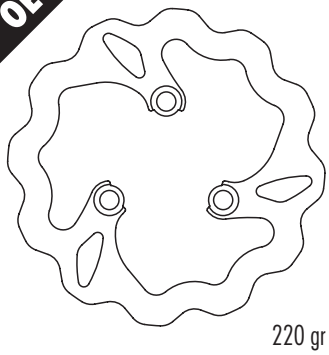

øext. 174 mm
øint. 56
3,0
220 gr

## GALFER DF 717 W

OE

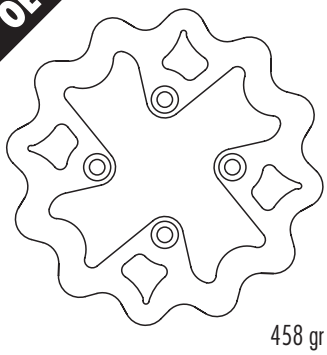

øext. 165 mm
øint. 51
4,4
458 gr

## GALFER DF 723 W

OE

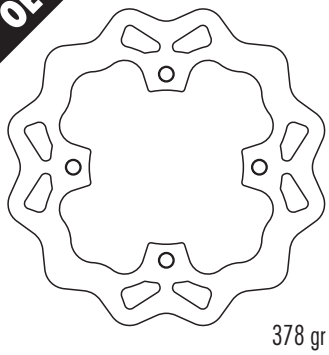

øext. 202 mm
øint. 95
3,5
378 gr

**OE:** Original equipment (original replacement disc) - **OE:** Equipo original (disco de remplazo del original)
**OE discs --> W - FLW - CW** **Special discs --> WS - WR - RW - RWS - FLS - FLX - FRS - CRW**

## GALFER DF 725 W

OE

øext. 177 mm
øint. 51,7
4,5

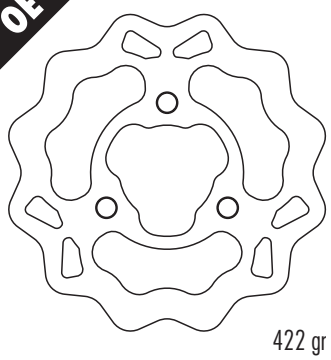

422 gr

## GALFER DF 732 W

OE

øext. 200 mm
øint. 51,5
3,6

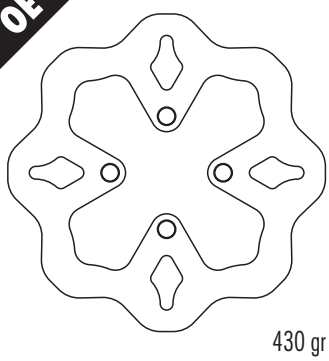

430 gr

## GALFER DF 738 W

OE

øext. 280 mm
øint. 90
4,0

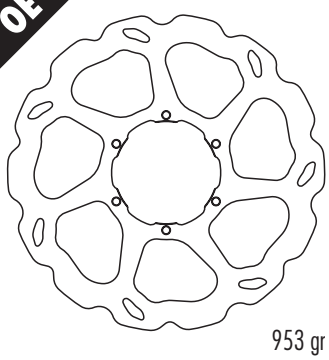

953 gr

## GALFER DF 727 W

OE

øext. 196 mm
øint. 81,3
4,0

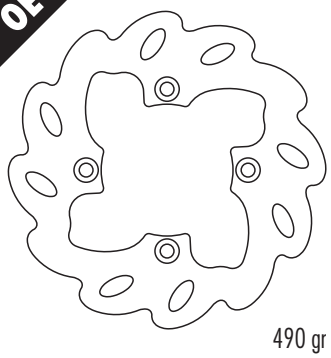

490 gr

## GALFER DF 733 W

OE

øext. 160 mm
øint. 48
3,1

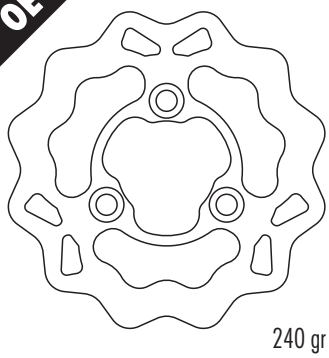

240 gr

## GALFER DF 740 W

OE

INCLUDE PINS

øext. 185 mm
øint. 70,5
3,0

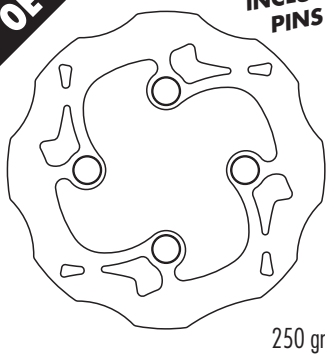

250 gr

## GALFER DF 729 W

OE

øext. 160 mm
øint. 48
4,9

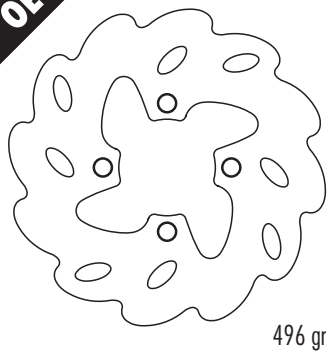

496 gr

## GALFER DF 734 W

OE

øext. 190 mm
øint. 78,5
4,0

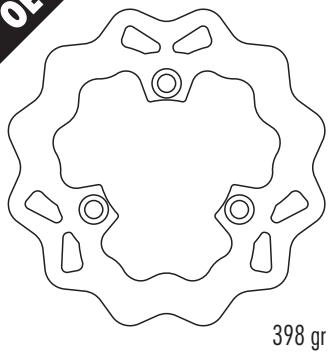

398 gr

## GALFER DF 741 W

OE

øext. 150 mm
øint. 45
3,0

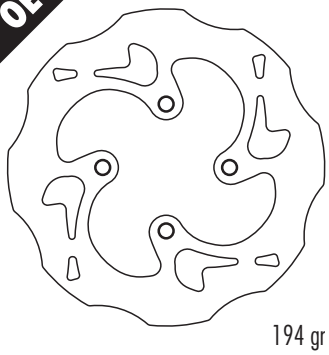

194 gr

## GALFER DF 730 W

OE

øext. 199 mm
øint. 51,2
3,5

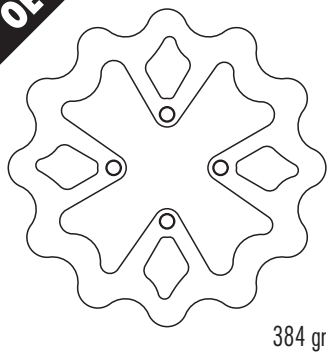

384 gr

## GALFER DF 736 W

OE

øext. 255 mm
øint. 115
5,0

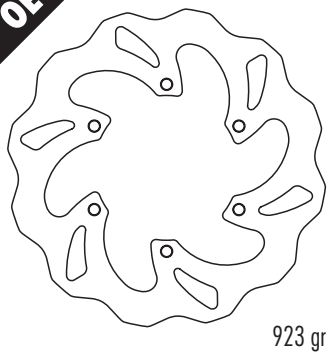

923 gr

## GALFER DF 742 W

OE

øext. 180 mm
øint. 54
5,0

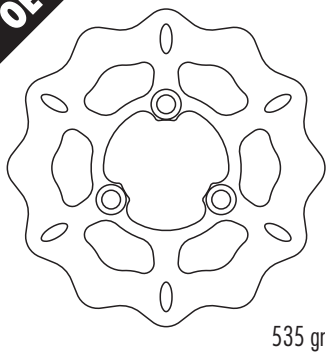

535 gr

## GALFER DF 731 W

OE

øext. 163 mm
øint. 51,7
3,5

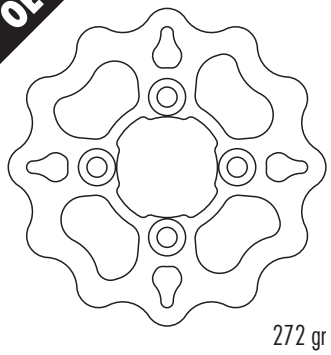

272 gr

## GALFER DF 737 W

OE

øext. 220 mm
øint. 58
4,0

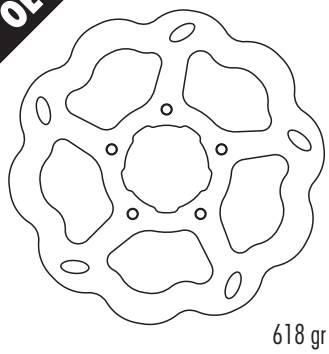

618 gr

## GALFER DF 743 W

OE

øext. 220 mm
øint. 108
4,5

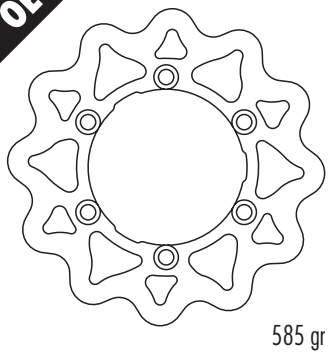

585 gr

**OE:** Original equipment (original replacement disc) - **OE:** Equipo original (disco de remplazo del original)
**OE discs --> W - FLW - CW** **Special discs --> WS - WR - RW - RWS - FLS - FLX - FRS - CRW**

## GALFER DF 744 W

OE

øext. 260 mm
øint. 72
3,2

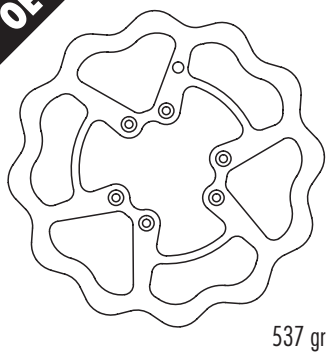

537 gr

## GALFER DF 751 W

OE

øext. 290 mm
øint. 109
4,0

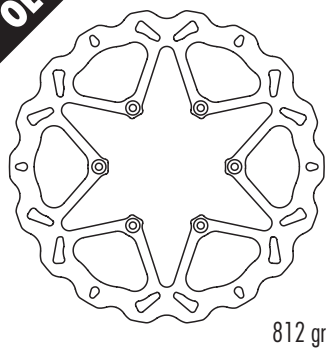

812 gr

## GALFER DF 758 W

OE

øext. 200 mm
øint. 63
4,0

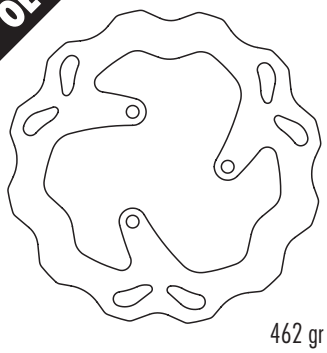

462 gr

## GALFER DF 745 W

OE

øext. 200 mm
øint. 45
3,5

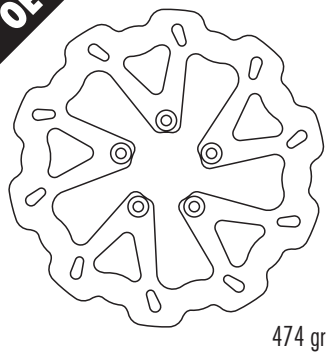

474 gr

## GALFER DF 751 FLW

OE

øext. 290 mm
øint. 109
4,0

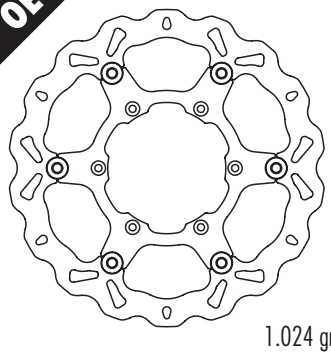

1.024 gr

## GALFER DF 759 W

OE

øext. 300 mm
øint. 108
4,0

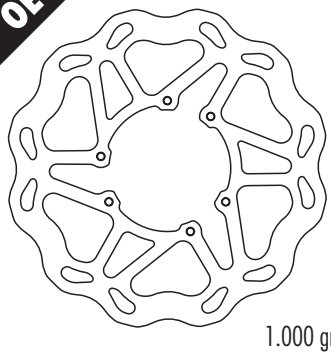

1.000 gr

## GALFER DF 747 W

OE

øext. 202 mm
øint. 75,5
4,8

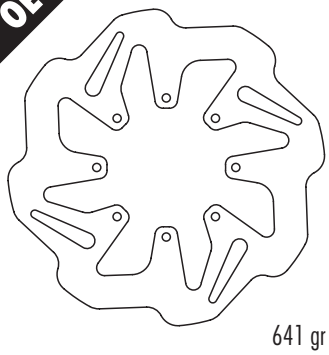

641 gr

## GALFER DF 752 W

OE

øext. 250 mm
øint. 109
4,0

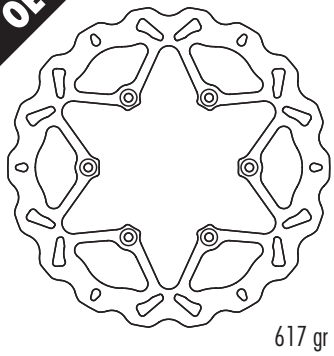

617 gr

## GALFER DF 763 W

OE

øext. 265 mm
øint. 136
5,0

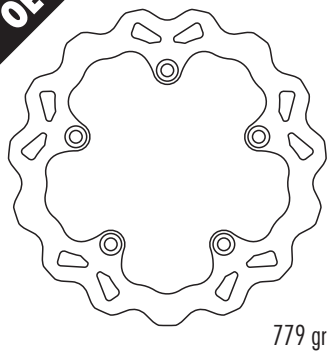

779 gr

## GALFER DF 748 W

OE

øext. 216 mm
øint. 75,5
4,0

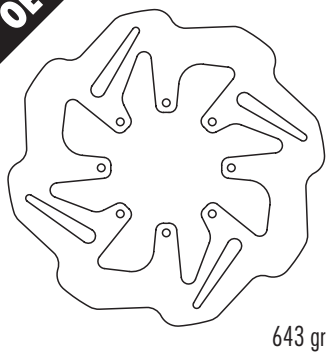

643 gr

## GALFER DF 755 CWI-D

OE

øext. 320 mm
øint. 179
5,0

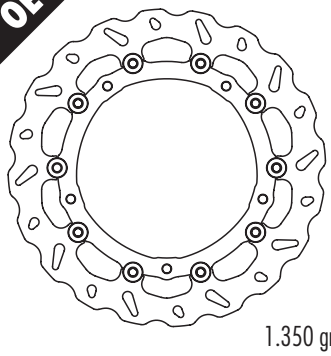

1.350 gr

## GALFER DF 765 CW

OE

øext. 310 mm
øint. 80
5,0
10,0

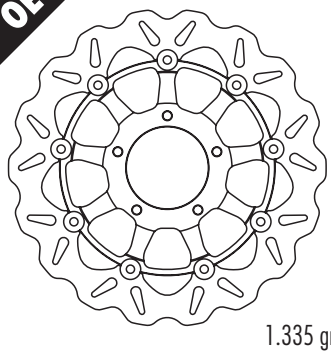

1.335 gr

## GALFER DF 749 W

OE

øext. 220 mm
øint. 75,5
5,0

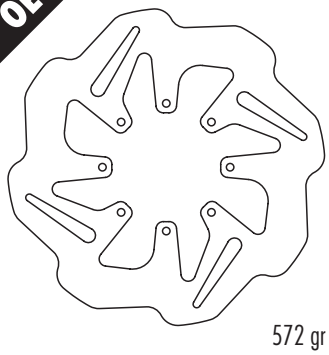

572 gr

## GALFER DF 756 W

OE

øext. 220 mm
øint. 120
5,0

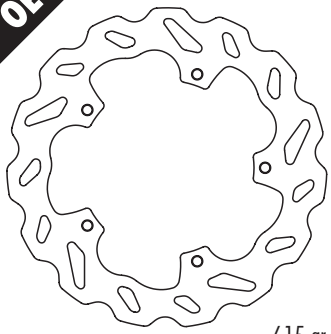

615 gr

## GALFER DF 766 W

OE

øext. 210 mm
øint. 108
5,0

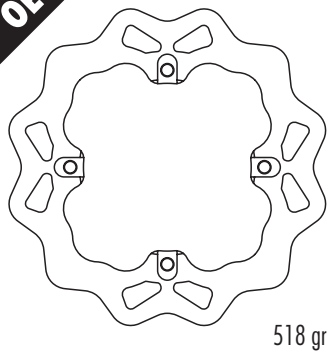

518 gr

**OE:** Original equipment (original replacement disc) - **OE:** Equipo original (disco de remplazo del original)
**OE discs --> W - FLW - CW** **Special discs --> WS - WR - RW - RWS - FLS - FLX - FRS - CRW**

## GALFER DF 767 W

OE

øext. 240 mm
øint. 113
4,0

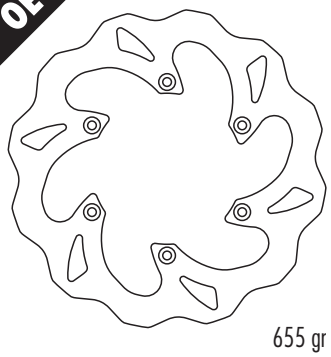

655 gr

## GALFER DF 771 W

OE

øext. 240 mm
øint. 109
4,0

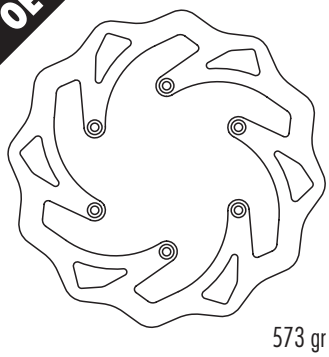

573 gr

## GALFER DF 775 W

OE

øext. 245 mm
øint. 83
5,0

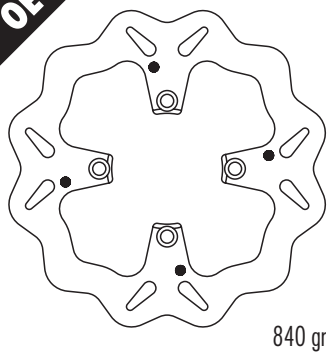

840 gr

## GALFER DF 768 W

OE

øext. 320 mm
øint. 176,5
4,5

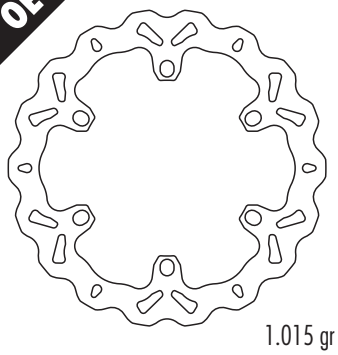

1.015 gr

## GALFER DF 772 FLW

OE

øext. 270 mm
øint. 120
3,0
SP

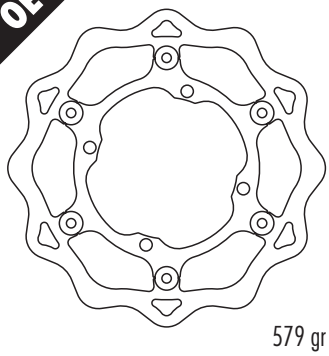

579 gr

## GALFER DF 777 W

OE

øext. 219 mm
øint. 95
3,0

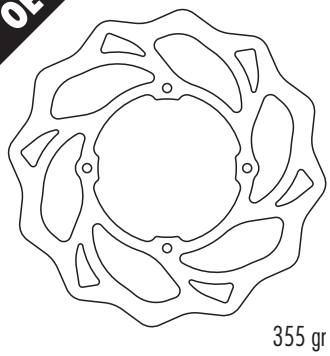

355 gr

## GALFER DF 769 W

OE

øext. 245 mm
øint. 108
5,0

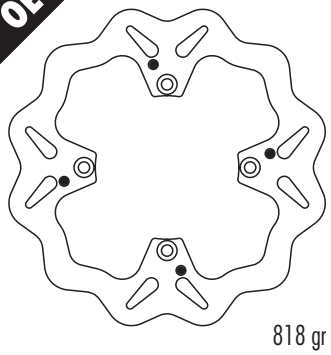

818 gr

## GALFER DF 773 CW

OE

øext. 305 mm
øint. 72
4,5
9,75

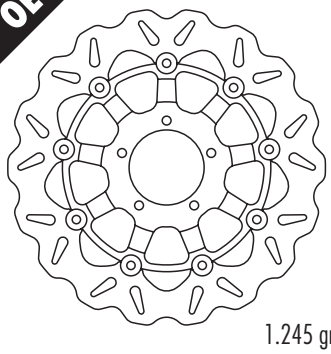

1.245 gr

## GALFER DF 778 W

OE

øext. 201,5 mm
øint. 110
4,0

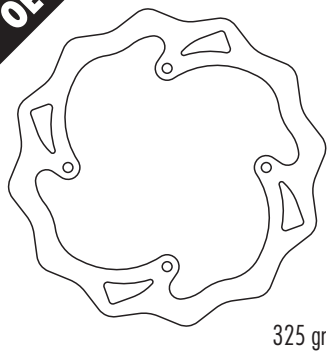

325 gr

## GALFER DF 770 W

OE

øext. 300 mm
øint. 127
5,0

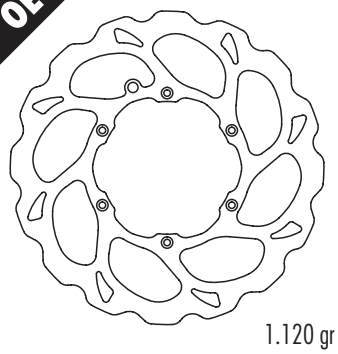

1.120 gr

## GALFER DF 774 CWI-D

OE

øext. 330 mm
øint. 72
5,0
15,0

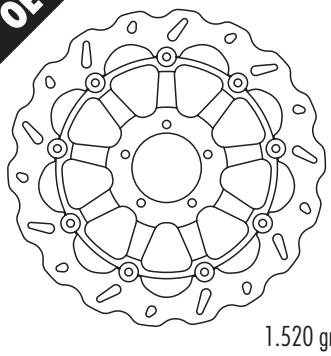

1.520 gr

## GALFER DF 779 W

OE

øext. 160 mm
øint. 84
2,5

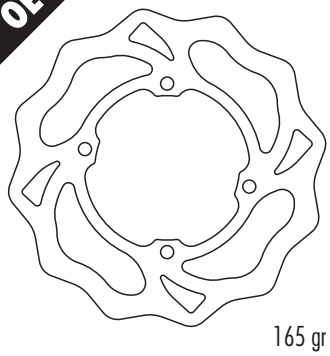

165 gr

## GALFER DF 770 FLW

OE

øext. 300 mm
øint. 124,4
5,0

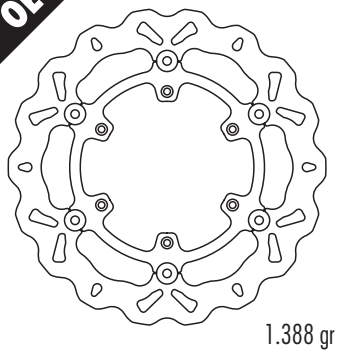

1.388 gr

## GALFER DF 774 CRWI-D

øext. 330 mm
øint. 72
5,0
15,0

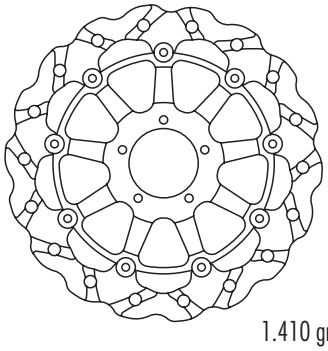

1.410 gr

## GALFER DF 780 W

OE

øext. 140 mm
øint. 45
2,7

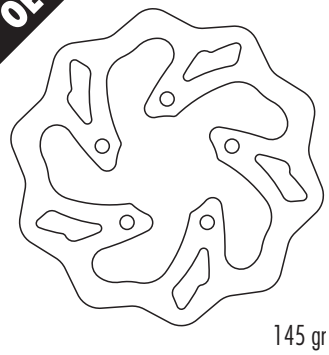

145 gr

**OE:** Original equipment (original replacement disc) - **OE:** Equipo original (disco de remplazo del original)
**OE discs --> W - FLW - CW** **Special discs --> WS - WR - RW - RWS - FLS - FLX - FRS - CRW**

## GALFER DF 782 FLW

OE

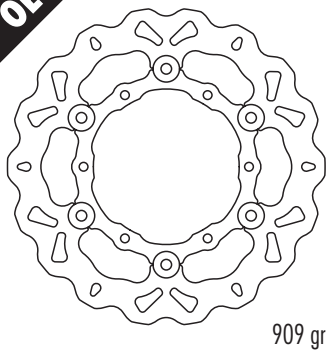

| | |
|---|---|
| øext. | 240 mm |
| øint. | 110 |
| | 5,0 |

909 gr

## GALFER DF 786 FLW

OE

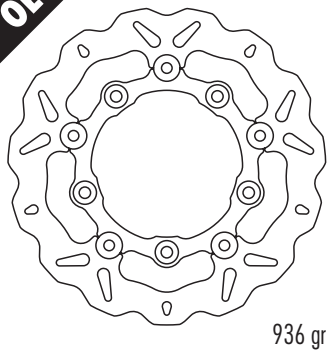

| | |
|---|---|
| øext. | 240 mm |
| øint. | 107 |
| | 5,0 |

936 gr

## GALFER DF 793 FLW

OE

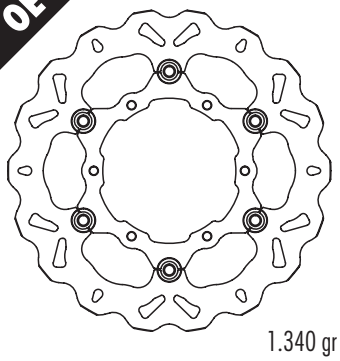

| | |
|---|---|
| øext. | 267 mm |
| øint. | 110 |
| | 5,0 |

1.340 gr

## GALFER DF 783 CWI-D

OE

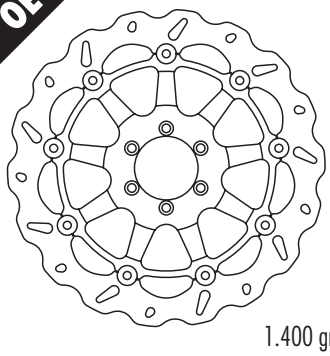

| | |
|---|---|
| øext. | 320 mm |
| øint. | 64 |
| | 5,0 |
| | 10,0 |

1.400 gr

## GALFER DF 787 CWI-D

OE

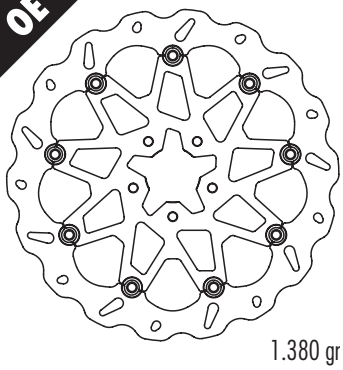

| | |
|---|---|
| øext. | 320 mm |
| øint. | 52 |
| | 5,0 |

1.380 gr

## GALFER DF 794 W

OE

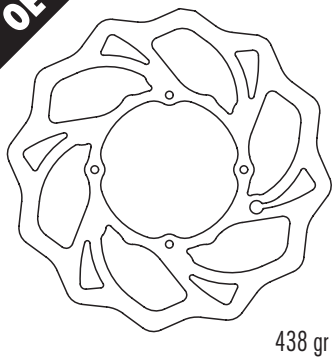

| | |
|---|---|
| øext. | 240 mm |
| øint. | 95 |
| | 3,0 |

438 gr

## GALFER DF 783 CRW

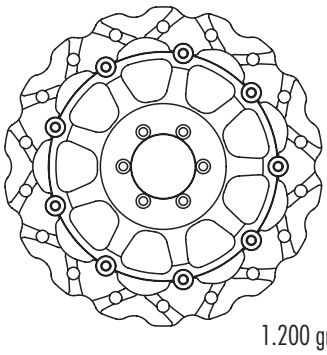

| | |
|---|---|
| øext. | 320 mm |
| øint. | 64 |
| | 5,0 |
| | 10,0 |

1.200 gr

## GALFER DF 788 W

OE

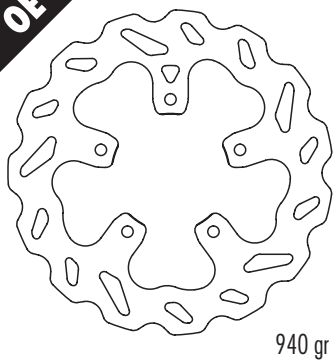

| | |
|---|---|
| øext. | 240 mm |
| øint. | 86 |
| | 5,0 |

940 gr

## GALFER DF 795 W

OE

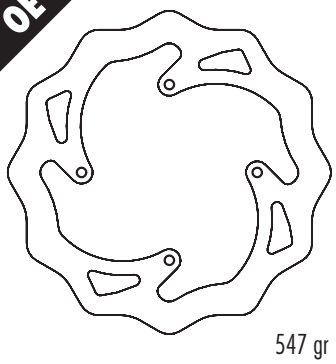

| | |
|---|---|
| øext. | 230 mm |
| øint. | 109 |
| | 4,0 |

547 gr

## GALFER DF 784 W

OE

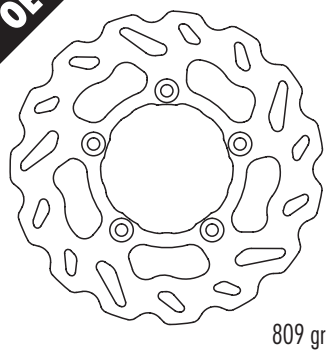

| | |
|---|---|
| øext. | 220 mm |
| øint. | 88,7 |
| | 5,0 |

809 gr

## GALFER DF 789 CW

OE

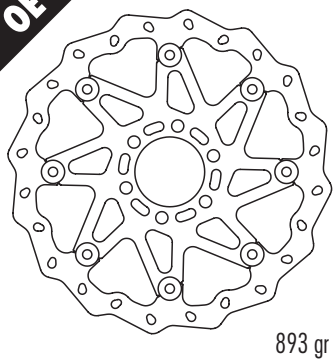

| | |
|---|---|
| øext. | 280 mm |
| øint. | 60 |
| | 4,0 |

893 gr

## GALFER DF 796 W

OE

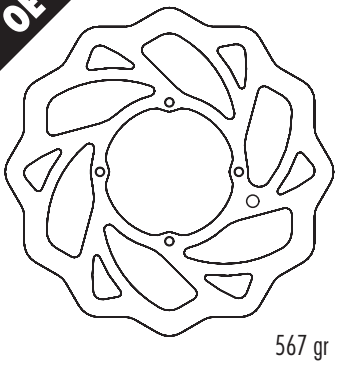

| | |
|---|---|
| øext. | 260 mm |
| øint. | 95 |
| | 3,0 |

567 gr

## GALFER DF 784 FLW

OE

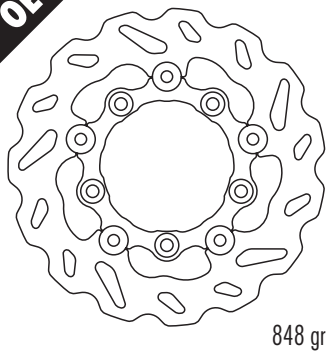

| | |
|---|---|
| øext. | 220 mm |
| øint. | 88,7 |
| | 5,0 |

848 gr

## GALFER DF 790 W

OE

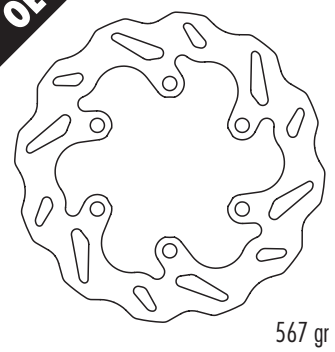

| | |
|---|---|
| øext. | 230 mm |
| øint. | 104 |
| | 4,0 |

567 gr

## GALFER DF 797 W

OE

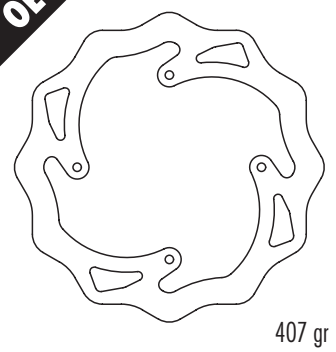

| | |
|---|---|
| øext. | 210 mm |
| øint. | 109 |
| | 4,0 |

407 gr

**OE:** Original equipment (original replacement disc) - **OE:** Equipo original (disco de remplazo del original)
**OE discs --> W - FLW - CW** **Special discs --> WS - WR - RW - RWS - FLS - FLX - FRS - CRW**

## GALFER DF 798 W

OE

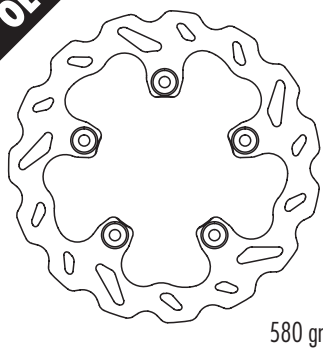

| | |
|---|---|
| øext. | 240 mm |
| øint. | 107 |
| | 4,0 |

580 gr

## GALFER DF 807 CW

OE

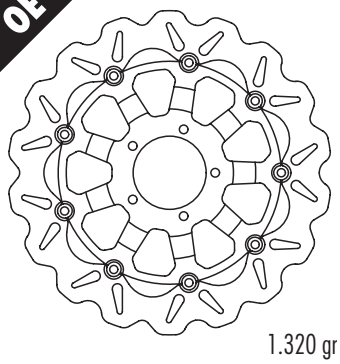

| | |
|---|---|
| øext. | 320 mm |
| øint. | 72 |
| | 4,5 |
| | 9,75 |

1.320 gr

## GALFER DF 812 W

OE

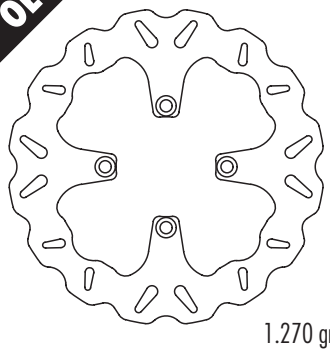

| | |
|---|---|
| øext. | 265 mm |
| øint. | 83,5 |
| | 6,0 |

1.270 gr

## GALFER DF 800 CW

OE

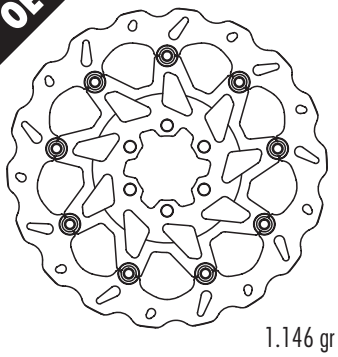

| | |
|---|---|
| øext. | 300 mm |
| øint. | 60 |
| | 5,0 |

1.146 gr

## GALFER DF 807 CRWI-D

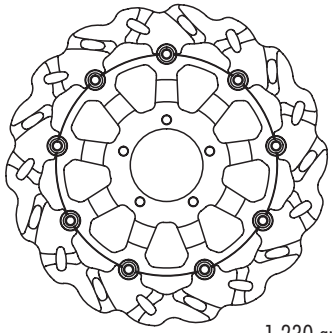

| | |
|---|---|
| øext. | 320 mm |
| øint. | 72 |
| | 4,5 |
| | 9,75 |

1.230 gr

## GALFER DF 814 W

OE

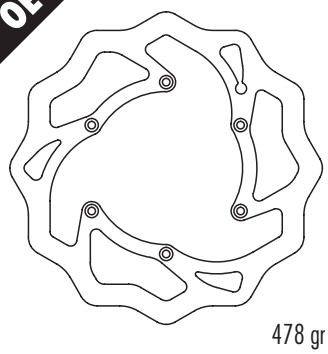

| | |
|---|---|
| øext. | 260 mm |
| øint. | 127 |
| | 3,0 |

478 gr

## GALFER DF 803 W

OE

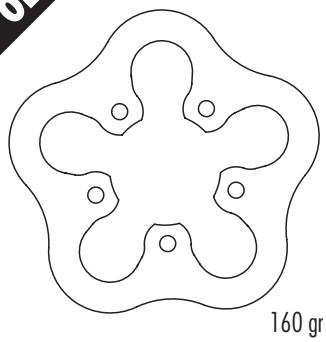

| | |
|---|---|
| øext. | 130 mm |
| øint. | 45 |
| | 3,0 |

160 gr

## GALFER DF 808 W

OE

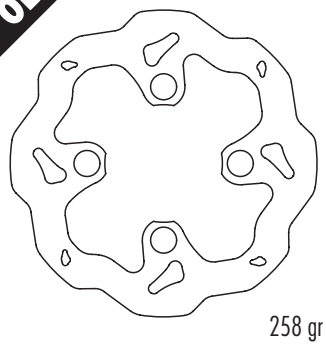

| | |
|---|---|
| øext. | 184 mm |
| øint. | 70,5 |
| | 2,9 |

258 gr

## GALFER DF 815 W

OE

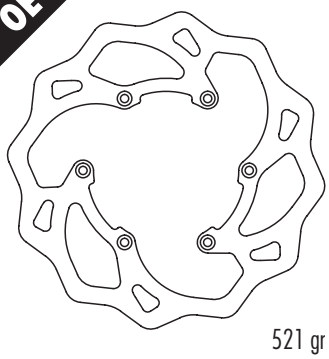

| | |
|---|---|
| øext. | 240 mm |
| øint. | 109 |
| | 4,0 |

521 gr

## GALFER DF 804 W

OE

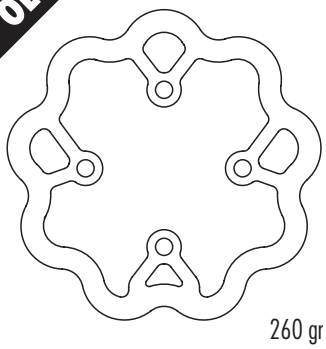

| | |
|---|---|
| øext. | 185 mm |
| øint. | 71,5 |
| | 3,5 |

260 gr

## GALFER DF 809 W

OE

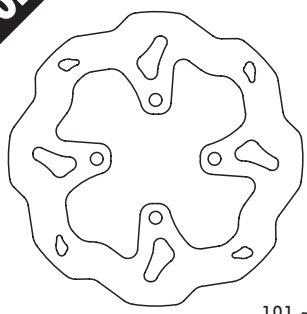

| | |
|---|---|
| øext. | 150 mm |
| øint. | 45,5 |
| | 2,9 |

191 gr

## GALFER DF 815 WLL

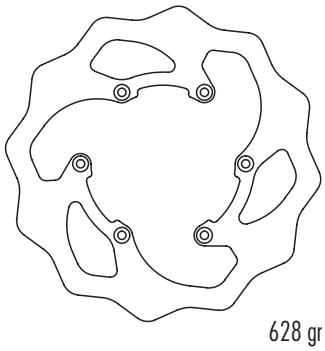

| | |
|---|---|
| øext. | 240 mm |
| øint. | 109 |
| | 4,0 |

628 gr

## GALFER DF 805 W

OE

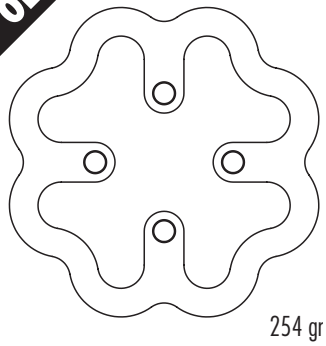

| | |
|---|---|
| øext. | 165 mm |
| øint. | 49,5 |
| | 3,0 |

254 gr

## GALFER DF 811 W

OE

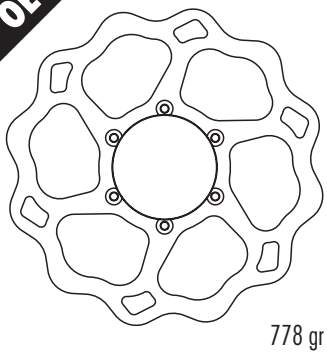

| | |
|---|---|
| øext. | 280 mm |
| øint. | 90 |
| | 4,0 |

778 gr

## GALFER DF 815 RW

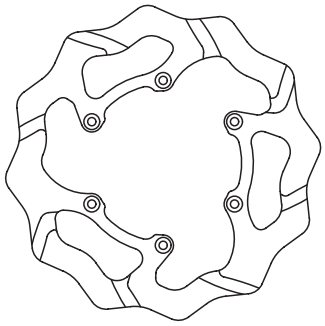

| | |
|---|---|
| øext. | 240 mm |
| øint. | 109 |
| | 4,0 |

600 gr

**OE:** Original equipment (original replacement disc) - **OE:** Equipo original (disco de remplazo del original)
**OE discs --> W - FLW - CW** **Special discs --> WS - WR - RW - RWS - FLS - FLX - FRS - CRW**

## GALFER DF 816 W

OE

øext. 270 mm
øint. 149,5
5,0

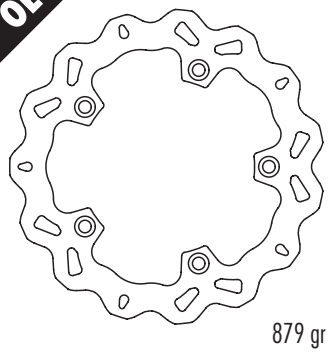

879 gr

## GALFER DF 822 CW

OE

øext. 300 mm
øint. 101,5
5,6
6,3

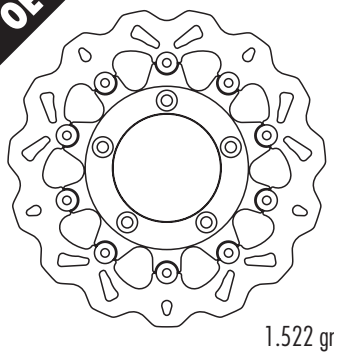

1.522 gr

## GALFER DF 827 W

OE

øext. 240 mm
øint. 102
4,0

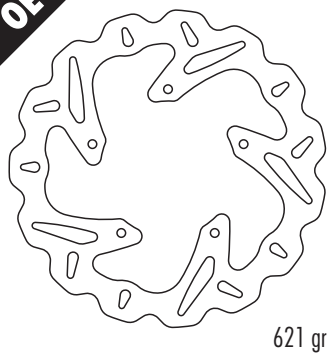

621 gr

## GALFER DF 816 FLW

OE

øext. 270 mm
øint. 149,5
5,0

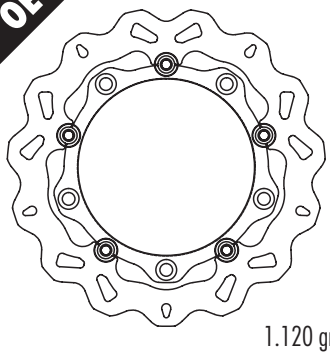

1.120 gr

## GALFER DF 823 PW

OE

øext. 292 mm
øint. 172
5,0

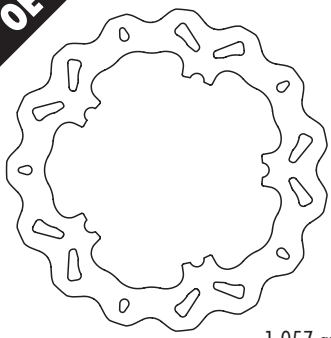

1.057 gr

## GALFER DF 828 W

OE

øext. 270 mm
øint. 70,5
3,0

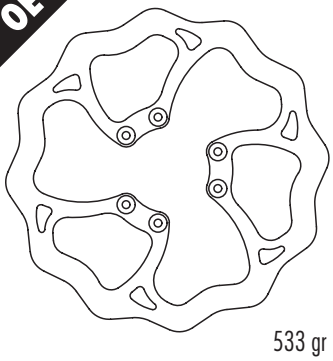

533 gr

## GALFER DF 817 CWI-D

OE

øext. 320 mm
øint. 64
5,0

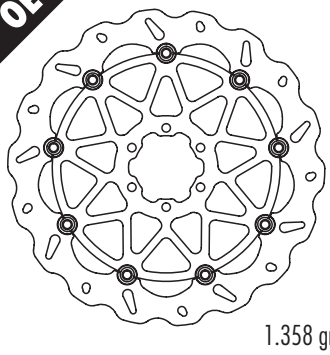

1.358 gr

## GALFER DF 824 CW

OE

øext. 292 mm
øint. 101,5
5,6

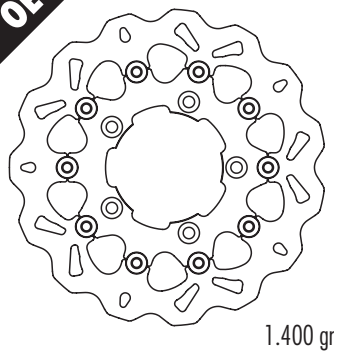

1.400 gr

## GALFER DF 828 FLW

OE

øext. 270 mm
øint. 70,5
3,0

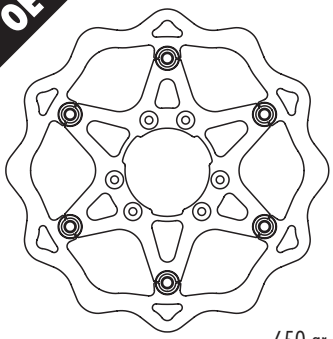

650 gr

## GALFER DF 820 W

OE

øext. 375 mm
øint. 307,5
5,0

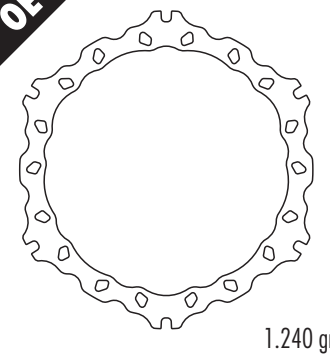

1.240 gr

## GALFER DF 826 CW

OE

øext. 320 mm
øint. 105
5,0
0,0
SP

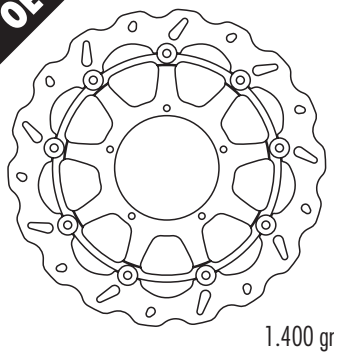

1.400 gr

## GALFER DF 829 W

OE

øext. 243 mm
øint. 114
4,0

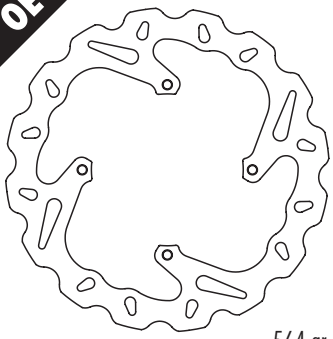

564 gr

## GALFER DF 821 PW

OE

øext. 300 mm
øint. 172
5,0

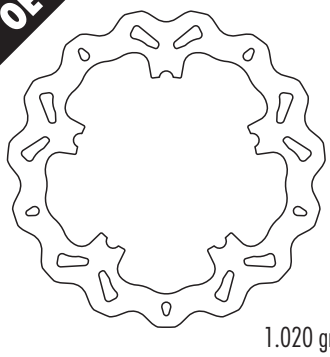

1.020 gr

## GALFER DF 826 CRWI-D

øext. 320 mm
øint. 105
5,0
0,0
SP

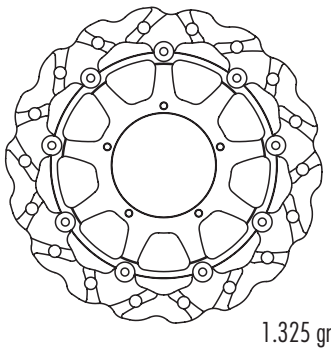

1.325 gr

## GALFER DF 829 WLL

øext. 243 mm
øint. 114
4,0

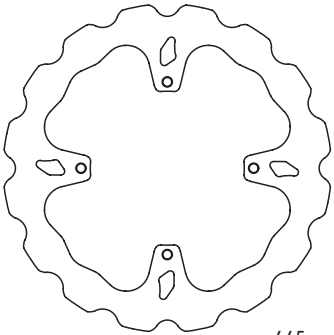

665 gr

**OE:** Original equipment (original replacement disc) • **OE:** Equipo original (disco de remplazo del original)
**OE discs --> W - FLW - CW** **Special discs --> WS - WR - RW - RWS - FLS - FLX - FRS - CRW**

## GALFER DF 829 RW

| | |
|---|---|
| øext. | 243 mm |
| øint. | 114 |
| | 4,0 |

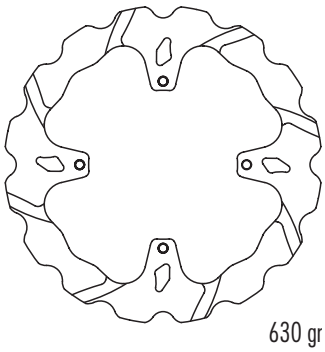

630 gr

## GALFER DF 839 W

OE

| | |
|---|---|
| øext. | 245 mm |
| øint. | 83 |
| | 5,0 |

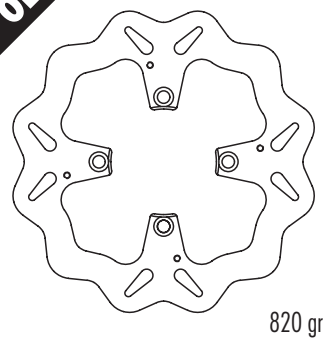

820 gr

## GALFER DF 860 W

OE

| | |
|---|---|
| øext. | 300 mm |
| øint. | 90 |
| | 4,0 |

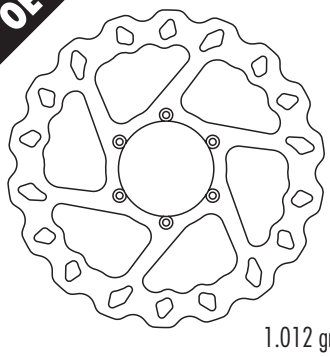

1.012 gr

## GALFER DF 830 CW

OE

| | |
|---|---|
| øext. | 320 mm |
| øint. | 80 |
| | 5,0 |

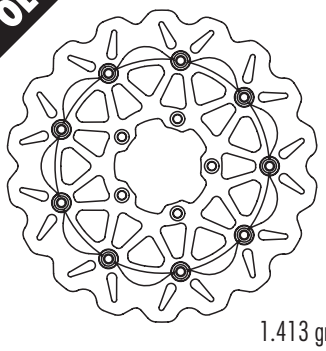

1.413 gr

## GALFER DF 840 W

OE

| | |
|---|---|
| øext. | 240 mm |
| øint. | 114 |
| | 4,0 |

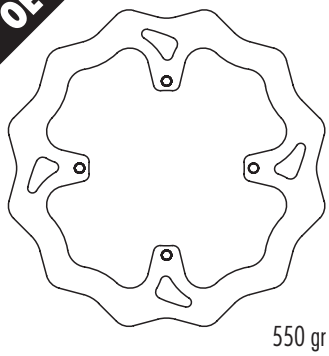

550 gr

## GALFER DF 861 W

OE

| | |
|---|---|
| øext. | 220 mm |
| øint. | 57 |
| | 4,0 |

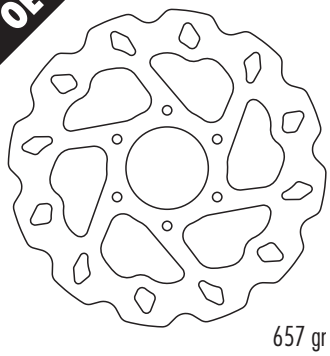

657 gr

## GALFER DF 831 W

OE

| | |
|---|---|
| øext. | 220 mm |
| øint. | 108 |
| | 5,0 |

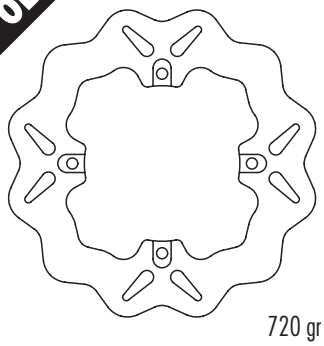

720 gr

## GALFER DF 841 W

OE

| | |
|---|---|
| øext. | 200 mm |
| øint. | 72 |
| | 3,5 |

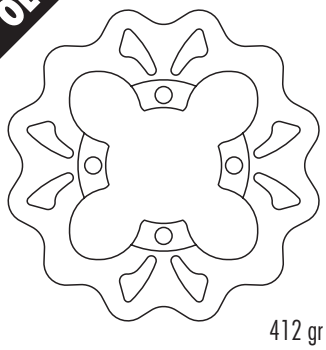

412 gr

## GALFER DF 862 FLW

OE

| | |
|---|---|
| øext. | 260 mm |
| øint. | 110 |
| | 3,0 |

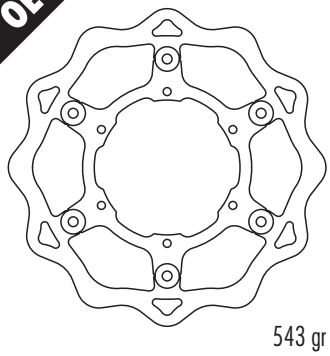

543 gr

## GALFER DF 835 CW

OE

| | |
|---|---|
| øext. | 300 mm |
| øint. | 56 |
| | 5,0 |

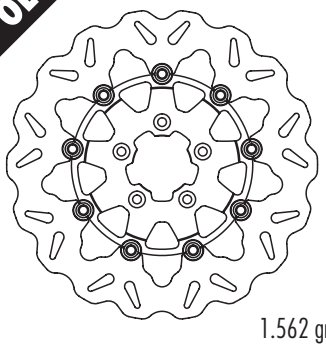

1.562 gr

## GALFER DF 842 W

OE

| | |
|---|---|
| øext. | 165 mm |
| øint. | 46 |
| | 5,0 |

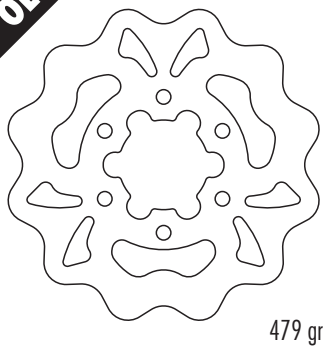

479 gr

## GALFER DF 863 W

OE

| | |
|---|---|
| øext. | 180 mm |
| øint. | 58 |
| | 3,5 |

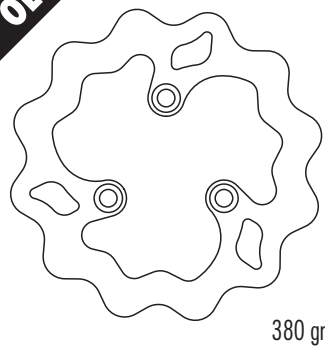

380 gr

## GALFER DF 838 W

OE

INCLUDE PINS

| | |
|---|---|
| øext. | 300 mm |
| øint. | 138,5 |
| | 5,0 |

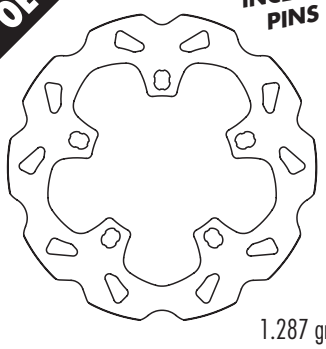

1.287 gr

## GALFER DF 843 CWI-D

OE

| | |
|---|---|
| øext. | 320 mm |
| øint. | 64 |
| | 5,0 |

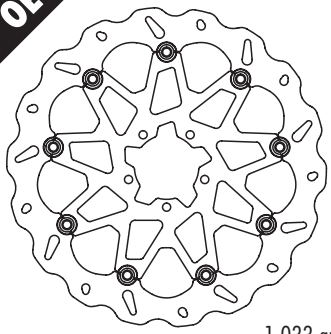

1.033 gr

## GALFER DF 863 RW

| | |
|---|---|
| øext. | 180 mm |
| øint. | 58 |
| | 3,5 |

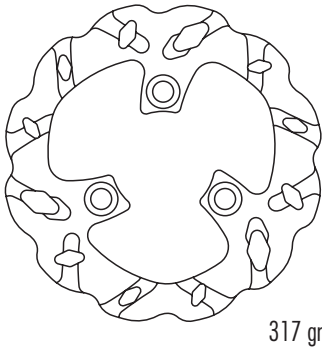

317 gr

**OE:** Original equipment (original replacement disc) - **OE:** Equipo original (disco de remplazo del original)
**OE discs --> W - FLW - CW** **Special discs --> WS - WR - RW - RWS - FLS - FLX - FRS - CRW**

**GALFER DF 864 W** — OE

øext. 226 mm · øint. 58 · 4,0

576 gr

**GALFER DF 872 W** — OE

øext. 200 mm · øint. 90 · 3,0

238 gr

**GALFER DF 876 CRWi-D**

øext. 310 mm · øint. 86 · 5,0 · 14,0

1.200 gr

**GALFER DF 867 W** — OE

øext. 155 mm · øint. 45 · 3,0

200 gr

**GALFER DF 873 W** — OE

øext. 165 mm · øint. 45 · 3,0

220 gr

**GALFER DF 877 CW** — OE

øext. 310 mm · øint. 78 · 4,5 · 16,0

1.272 gr

**GALFER DF 868 W** — OE

øext. 200 mm · øint. 45 · 3,0

393 gr

**GALFER DF 874 CW** — OE

øext. 320 mm · øint. 144 · 5,0

1.377 gr

**GALFER DF 878 W** — OE

øext. 180 mm · øint. 58 · 4,0

446 gr

**GALFER DF 869 W** — OE

øext. 200 mm · øint. 70 · 3,6

411 gr

**GALFER DF 875 W** — OE

øext. 256 mm · øint. 115 · 5,0

998 gr

**GALFER DF 879 W** — OE

øext. 220 mm · øint. 88,5 · 4,0

486 gr

**GALFER DF 870 CW** — OE

øext. 300 mm · øint. 64 · 4,5 · 0,0

1.170 gr

**GALFER DF 876 CW** — OE

øext. 310 mm · øint. 86 · 4,5 · 14,0

1.250 gr

**GALFER DF 880 CW** — OE

øext. 320 mm · øint. 72 · 4,5 · 14,5

1.325 gr

**OE:** Original equipment (original replacement disc) - **OE:** Equipo original (disco de remplazo del original)
**OE discs --> W - FLW - CW** **Special discs --> WS - WR - RW - RWS - FLS - FLX - FRS - CRW**

## GALFER DF 880 CRWI-D

| | |
|---|---|
| øext. | 320 mm |
| øint. | 72 |
| | 5,0 |
| | 15,0 |

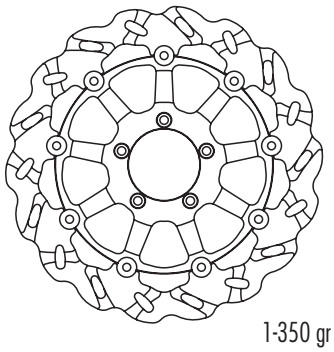

1-350 gr

## GALFER DF 883 CW — OE

| | |
|---|---|
| øext. | 320 mm |
| øint. | 64 |
| | 4,5 |
| | 9,5 |

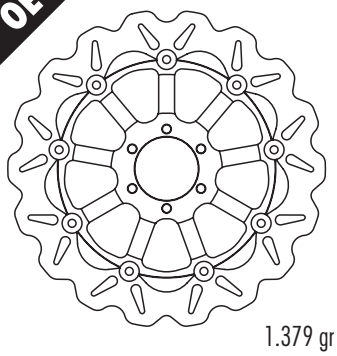

1.379 gr

## GALFER DF 888 W — OE

| | |
|---|---|
| øext. | 280 mm |
| øint. | 108 |
| | 3,5 |

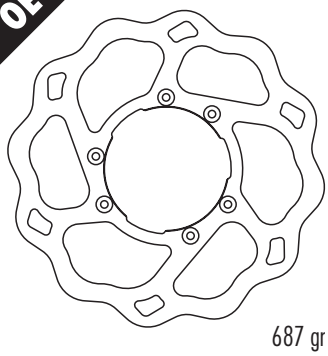

687 gr

## GALFER DF 881 FLW — OE

| | |
|---|---|
| øext. | 320 mm |
| øint. | 64 |
| | 4,5 |
| | 14,5 |

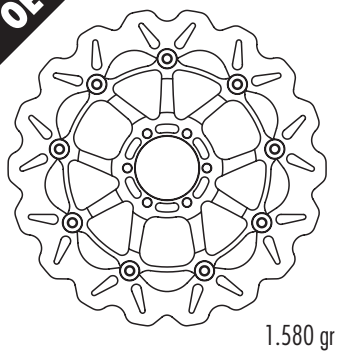

1.580 gr

## GALFER DF 884 W — OE

| | |
|---|---|
| øext. | 240 mm |
| øint. | 105,5 |
| | 4,5 |

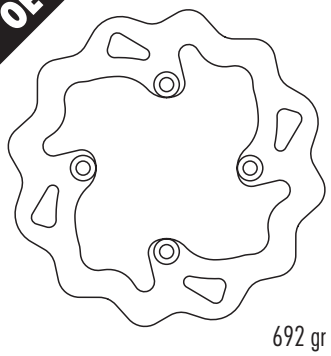

692 gr

## GALFER DF 889 W — OE

| | |
|---|---|
| øext. | 220 mm |
| øint. | 62 |
| | 3,5 |

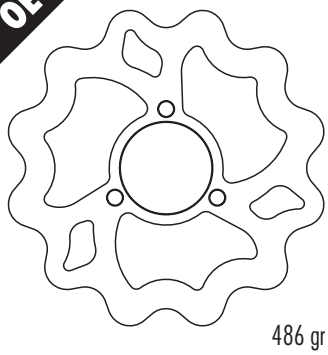

486 gr

## GALFER DF 881 CW — OE

| | |
|---|---|
| øext. | 320 mm |
| øint. | 64 |
| | 4,5 |
| | 14,5 |

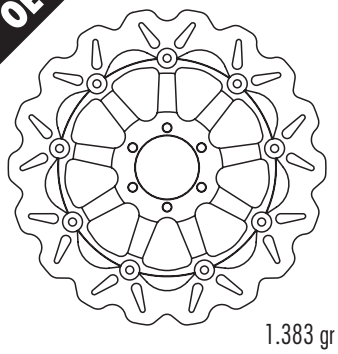

1.383 gr

## GALFER DF 885 W — OE

| | |
|---|---|
| øext. | 220 mm |
| øint. | 112 |
| | 4,0 |

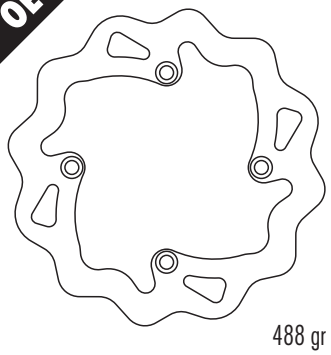

488 gr

## GALFER DF 892 W — OE

| | |
|---|---|
| øext. | 260 mm |
| øint. | 108 |
| | 4,0 |

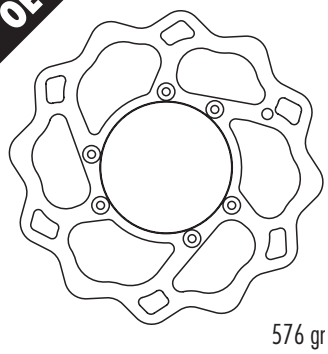

576 gr

## GALFER DF 881 CRWI-D

| | |
|---|---|
| øext. | 320 mm |
| øint. | 64 |
| | 4,5 |
| | 14,5 |

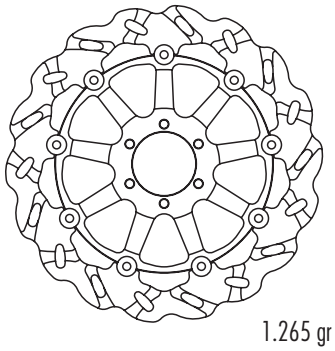

1.265 gr

## GALFER DF 885 PW — OE

| | |
|---|---|
| øext. | 220 mm |
| øint. | 126,7 |
| | 4,0 |

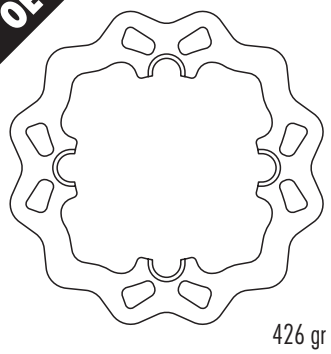

426 gr

## GALFER DF 894 W — OE

| | |
|---|---|
| øext. | 170 mm |
| øint. | 48 |
| | 4,0 |

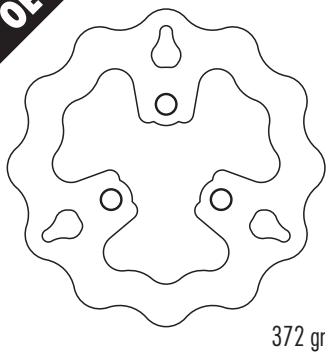

372 gr

## GALFER DF 882 CW — OE

| | |
|---|---|
| øext. | 340 mm |
| øint. | 60,5 |
| | 5,0 |
| | 11,0 |

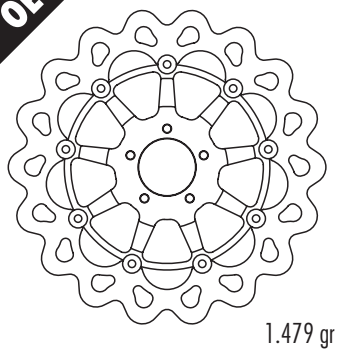

1.479 gr

## GALFER DF 887 W — OE

| | |
|---|---|
| øext. | 220 mm |
| øint. | 110 |
| | 4,5 |

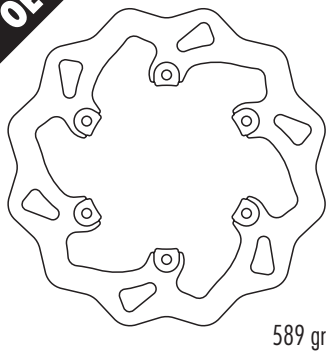

589 gr

## GALFER DF 895 W — OE

| | |
|---|---|
| øext. | 190 mm |
| øint. | 72 |
| | 4,0 |

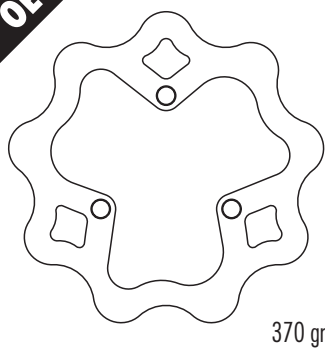

370 gr

**OE:** Original equipment (original replacement disc) - **OE:** Equipo original (disco de remplazo del original)
**OE discs --> W - FLW - CW** **Special discs --> WS - WR - RW - RWS - FLS - FLX - FRS - CRW**

## GALFER DF 898 W

OE

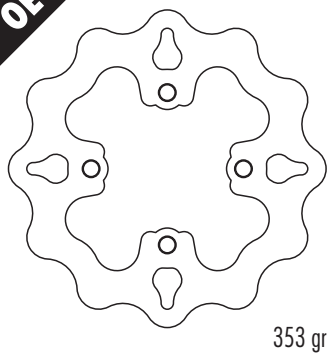

| | |
|---|---|
| øext. | 177 mm |
| øint. | 64 |
| | 4,0 |
| | |
| | |

353 gr

## GALFER DF 909 CW

OE

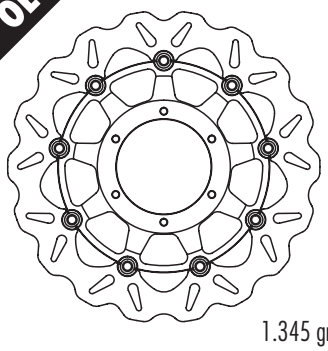

| | |
|---|---|
| øext. | 310 mm |
| øint. | 94 |
| | 5,0 |
| | 21,5 |
| | |

1.345 gr

## GALFER DF 916 W

OE

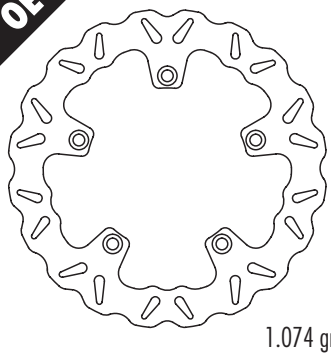

| | |
|---|---|
| øext. | 285 mm |
| øint. | 144 |
| | 5,0 |
| | |
| | |

1.074 gr

## GALFER DF 899 W

OE

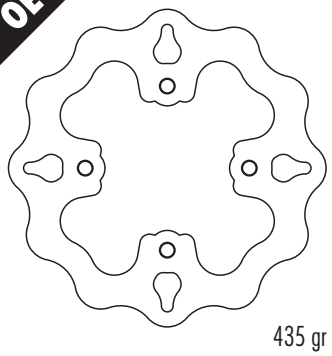

| | |
|---|---|
| øext. | 196 mm |
| øint. | 76,5 |
| | 4,0 |
| | |
| | |

435 gr

## GALFER DF 910 W

OE

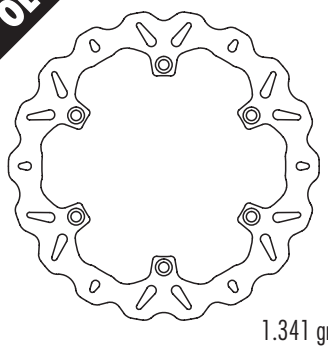

| | |
|---|---|
| øext. | 316 mm |
| øint. | 184 |
| | 6,0 |
| | |
| | |

1.341 gr

## GALFER DF 906 CW

OE

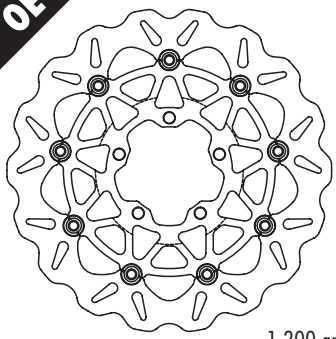

| | |
|---|---|
| øext. | 310 mm |
| øint. | 83 |
| | 5,0 |
| | |
| | |

1.300 gr

## GALFER DF 911 W

OE

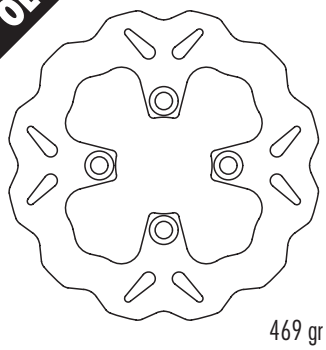

| | |
|---|---|
| øext. | 190 mm |
| øint. | 58 |
| | 4,0 |
| | |
| | |

469 gr

## GALFER DF 906 CRWI-D

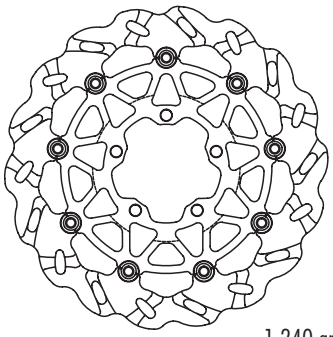

| | |
|---|---|
| øext. | 310 mm |
| øint. | 83 |
| | 5,0 |
| | |
| | |

1.240 gr

## GALFER DF 914 CW

OE

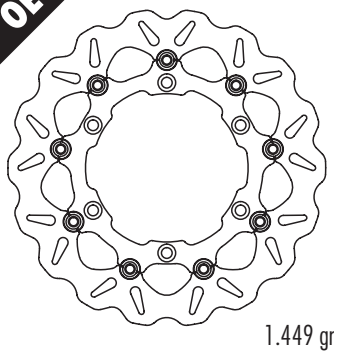

| | |
|---|---|
| øext. | 310 mm |
| øint. | 144 |
| | 5,5 |
| | |
| | |

1.449 gr

## GALFER DF 907 W

OE

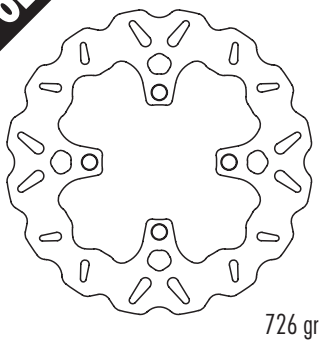

| | |
|---|---|
| øext. | 220 mm |
| øint. | 82 |
| | 5,0 |
| | |
| | |

726 gr

## GALFER DF 915 W

OE

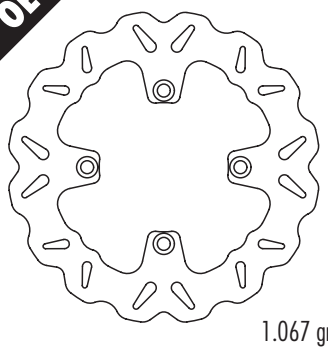

| | |
|---|---|
| øext. | 255 mm |
| øint. | 105 |
| | 5,5 |
| | |
| | |

1.067 gr

**OE:** Original equipment (original replacement disc) - **OE:** Equipo original (disco de remplazo del original)
**OE discs --> W - FLW - CW** **Special discs --> WS - WR - RW - RWS - FLS - FLX - FRS - CRW**

GALFER
PERFORMANCE BRAKING SYSTEMS
1
BCN HARLEY DAYS
BEST OF THE SHOW
2014
LOBO3
LOBO MOTORCYCLES

GALFER MOTO

# MF

# BRAKE SHOES
# MORDAZAS DE FRENO
## GANASCE FRENO
## MÂCHOIRES DE FREIN

GALFER
**MF 001 G2165**
↔ 95 mm x
↕ 20

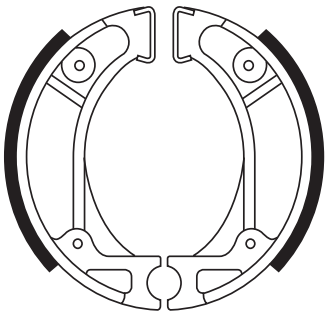

GALFER
**MF 002 G2165**
↔ 110 mm x
↕ 25

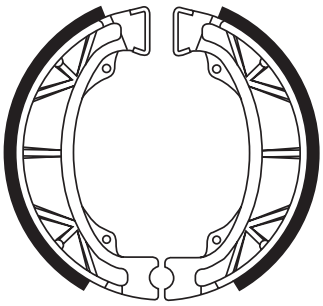

GALFER
**MF 003 G2165**
↔ 110 mm x
↕ 25

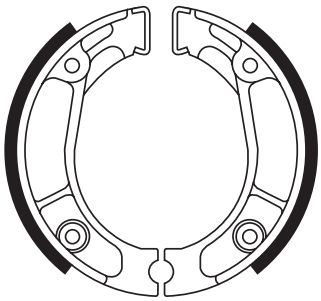

GALFER
**MF 004 G2165**
↔ 80 mm x
↕ 18

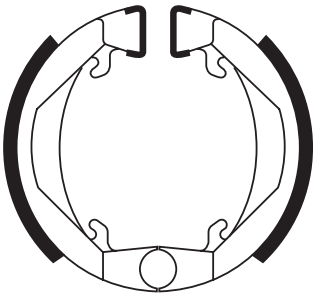

GALFER
**MF 005 G2165**
↔ 130 mm x
↕ 30

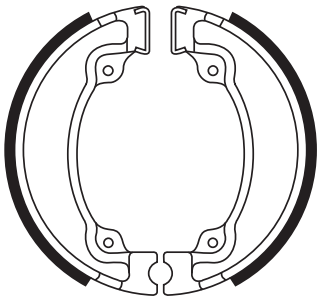

GALFER
**MF 006 G2165**
↔ 130 mm x
↕ 30

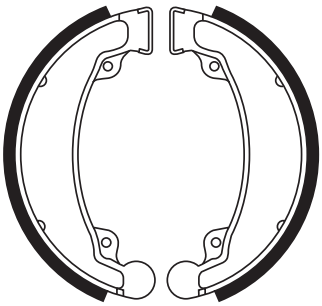

GALFER
**MF 007 G2165**
↔ 95 mm x
↕ 20

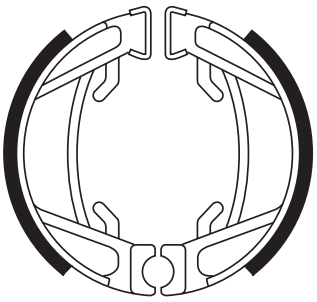

GALFER
**MF 008 G2165**
↔ 110 mm x
↕ 25

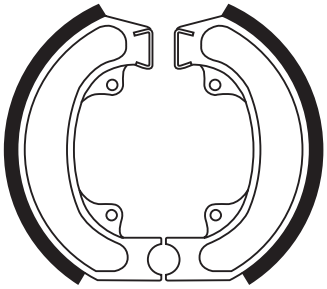

GALFER
**MF 009 G2165**
↔ 130 mm x
↕ 25

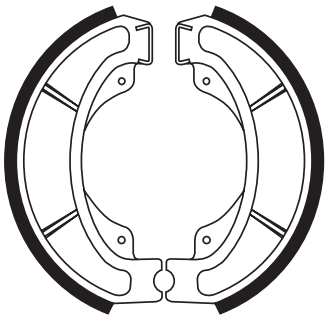

GALFER
**MF 010 G2165**
↔ 80 mm x
↕ 18

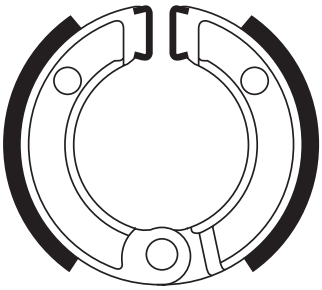

GALFER
**MF 019 G2165**
↔ 140 mm x
↕ 40

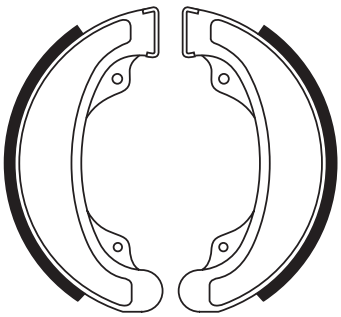

GALFER
**MF 035 G2165**
↔ 160 mm x
↕ 40

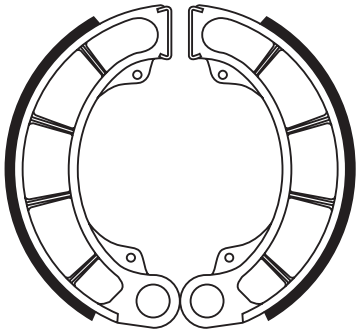

GALFER
**MF 037 G2165**
↔ 130 mm x
↕ 25

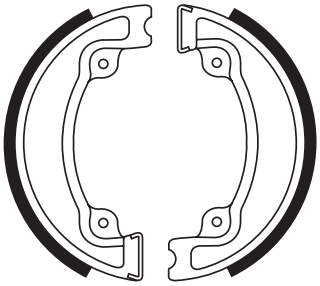

GALFER
**MF 044 G2165**
↔ 160 mm x
↕ 30

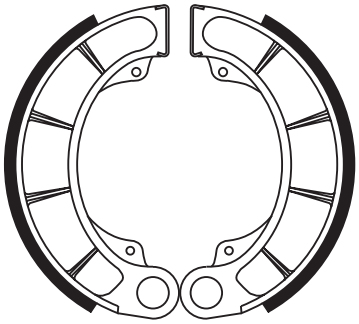

GALFER
**MF 051 G2165**
↔ 125 mm x
↕ 25

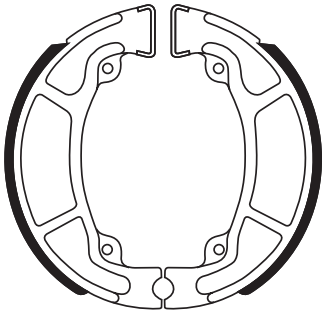

**GALFER MF 151 G2165**
↔ 130 mm x ↕ 28

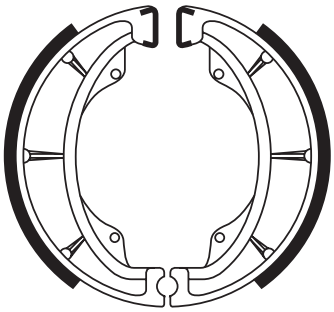

**GALFER MF 152 G2165**
↔ 160 mm x ↕ 30

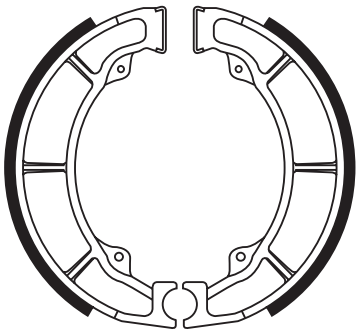

**GALFER MF 153 G2165**
↔ 180 mm x ↕ 40

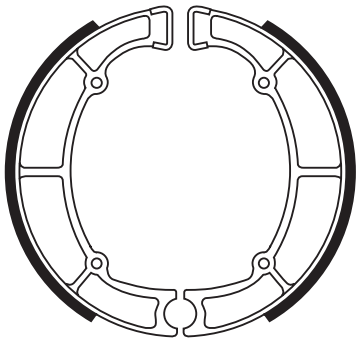

**GALFER MF 160 G2165**
↔ 180 mm x ↕ 35

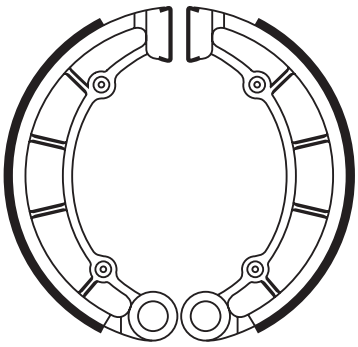

**GALFER MF 301 G2165**
↔ 120 mm x ↕ 35

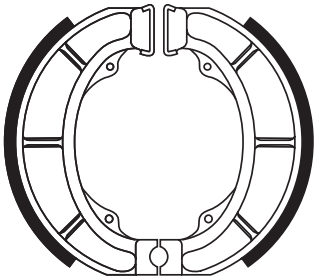

**GALFER MF 302 G2165**
↔ 80 mm x ↕ 17

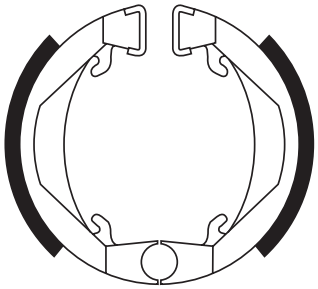

**GALFER MF 303 G2165**
↔ 160 mm x ↕ 30

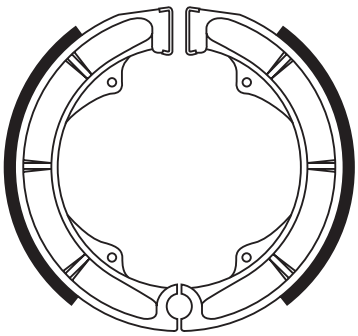

**GALFER MF 304 G2165**
↔ 180 mm x ↕ 36

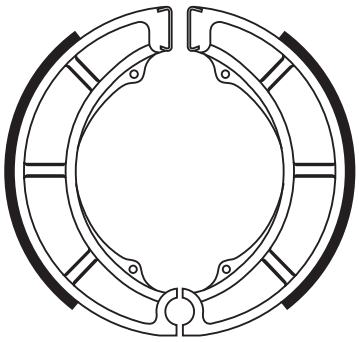

**GALFER MF 451 G2165**
↔ 130 mm x ↕ 28

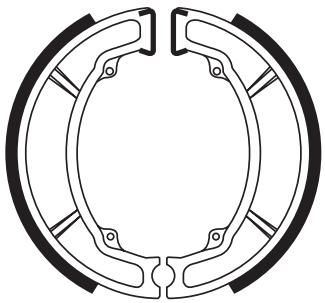

**GALFER MF 452 G2165**
↔ 150 mm x ↕ 25

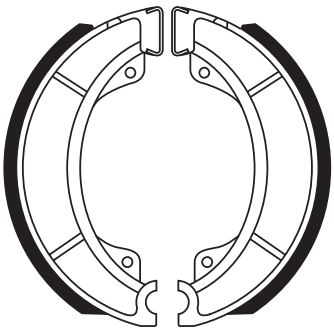

**GALFER MF 453 G2165**
↔ 110 mm x ↕ 25

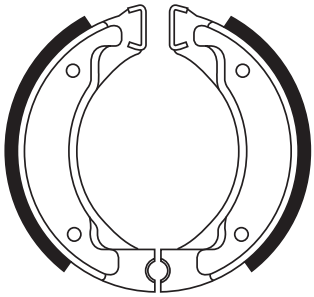

**GALFER MF 454 G2165**
↔ 80 mm x ↕ 17

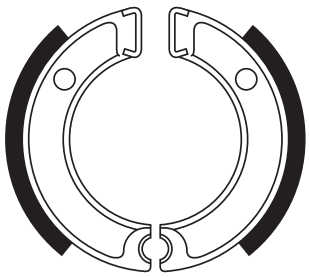

**GALFER MF 455 G2165**
↔ 100 mm x ↕ 20

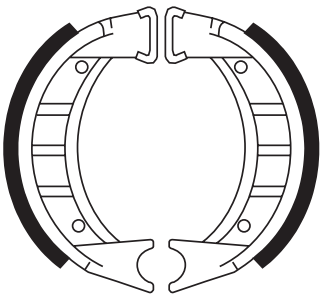

**GALFER MF 456 G2165**
↔ 150 mm x ↕ 25

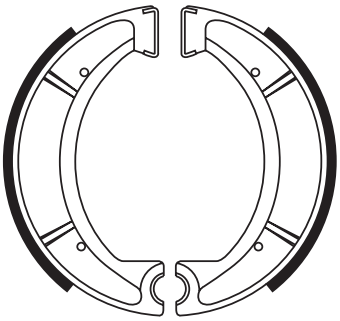

**GALFER MF 457 G2165**
↔ 160 mm x ↕ 30

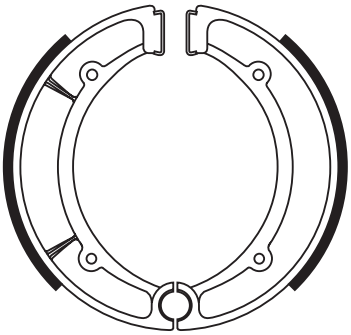

**GALFER MF 458 G2165**

↔ 110 mm x ↕ 25

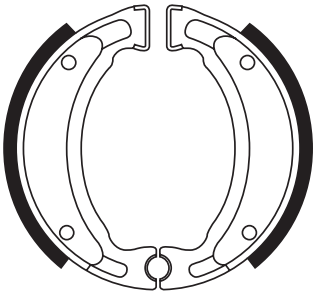

**GALFER MF 459 G2165**

↔ 200 mm x ↕ 40

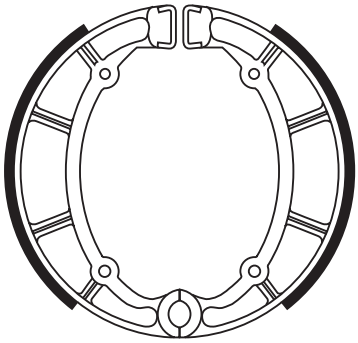

**GALFER MF 460 G2165**

↔ 95 mm x ↕ 20

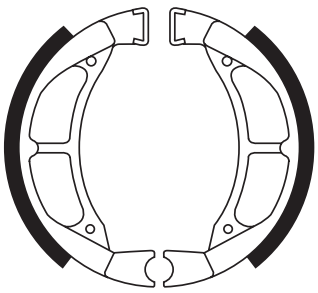

**GALFER MF 461 G2165**

↔ 110 mm x ↕ 25

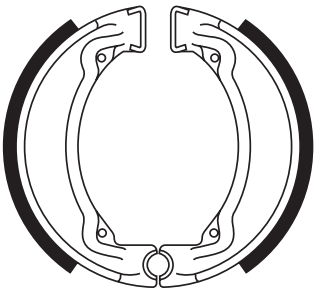

**GALFER MF 477 G2165**

↔ 180 mm x ↕ 40

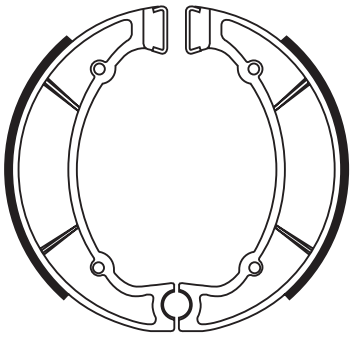

**GALFER MF 601 G2165**

↔ 150 mm x ↕ 24

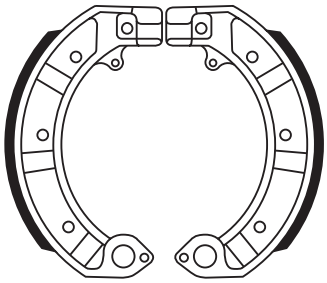

**GALFER MF 602 G2165**

↔ 125 mm x ↕ 17

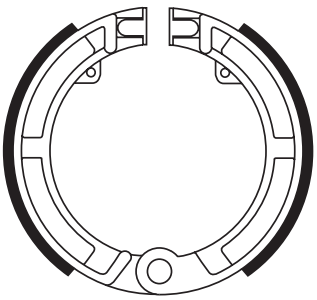

**GALFER MF 604 G2165**

↔ 170 mm x ↕ 25

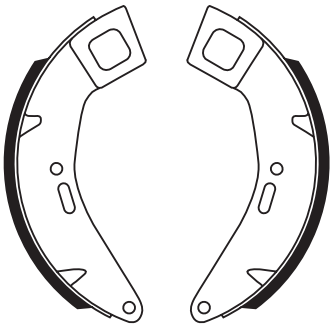

**GALFER MF 605 G2165**

↔ 170 mm x ↕ 25

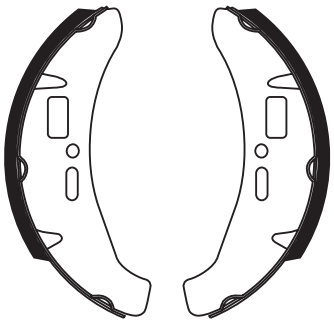

**GALFER MF 606 G2165**

↔ 95 mm x ↕ 20

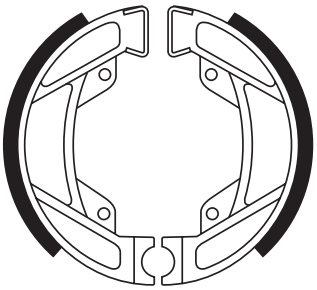

**GALFER MF 608 G2165**

↔ 110 mm x ↕ 30

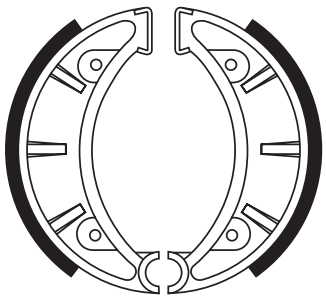

**GALFER MF 609 G2165**

↔ 95 mm x ↕ 20

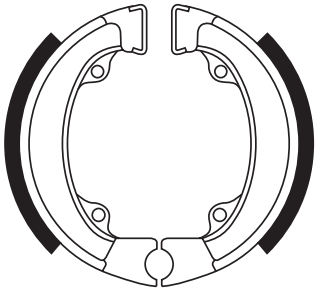

**GALFER MF 610 G2165**

↔ 200 mm x ↕ 25

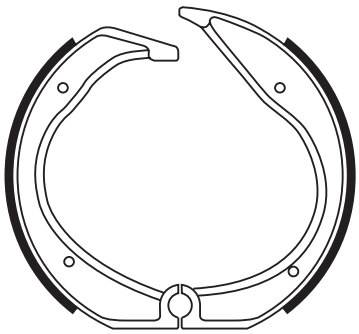

**GALFER MF 612 G2165**

↔ 200 mm x ↕ 30

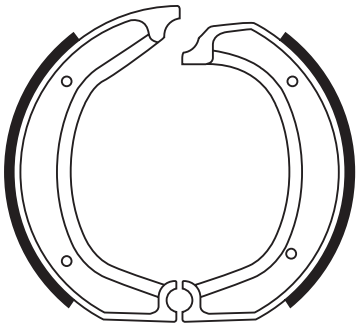

**GALFER MF 613 G2165**

↔ 200 mm x ↕ 30

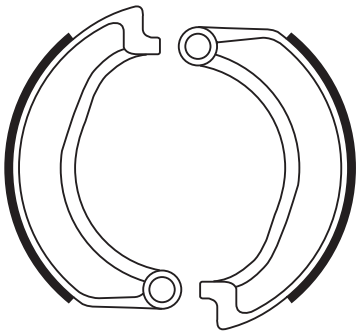

**GALFER MF 615 G2165**

| ↔ mm ↕ | x |
|---|---|

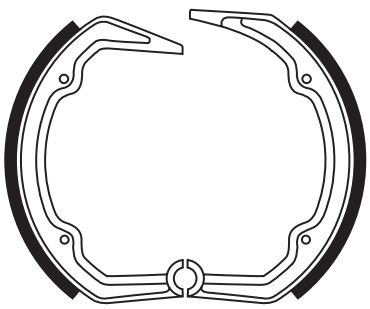

**GALFER MF 616 G2165**

| ↔ mm ↕ | 200 x 27 |
|---|---|

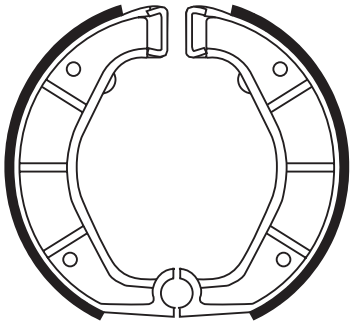

**GALFER MF 617 G2165**

| ↔ mm ↕ | 105 x 20 |
|---|---|

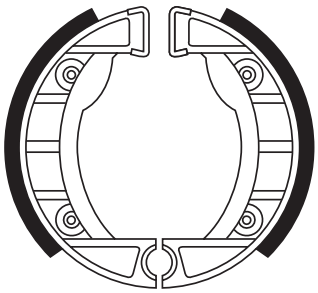

**GALFER MF 618 G2165**

| ↔ mm ↕ | 90 x 18 |
|---|---|

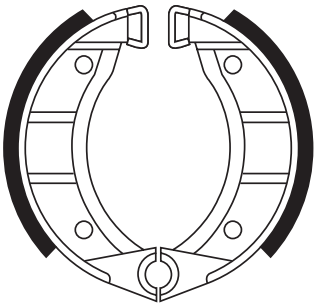

**GALFER MF 619 G2165**

| ↔ mm ↕ | 150 x 24 |
|---|---|

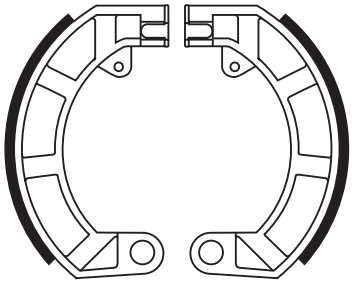

**GALFER MF 620 G2165**

| ↔ mm ↕ | 110 x 25 |
|---|---|

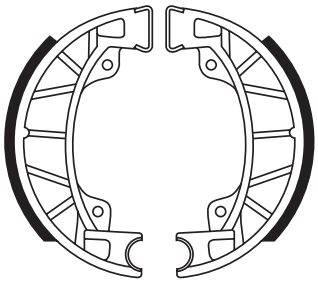

**GALFER MF 621 G2165**

| ↔ mm ↕ | 100 x 20 |
|---|---|

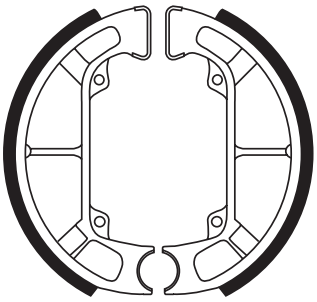

**GALFER MF 622 G2165**

| ↔ mm ↕ | 130 x 20 |
|---|---|

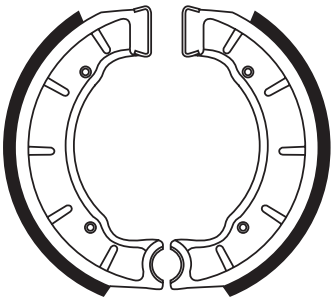

**GALFER MF 625 G2165**

| ↔ mm ↕ | 105 x 25 |
|---|---|

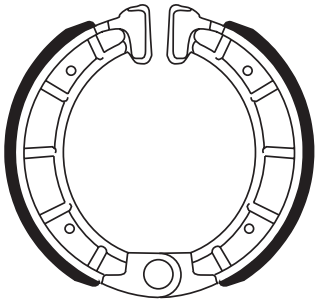

**GALFER MF 626 G2165**

| ↔ mm ↕ | 110 x 25 |
|---|---|

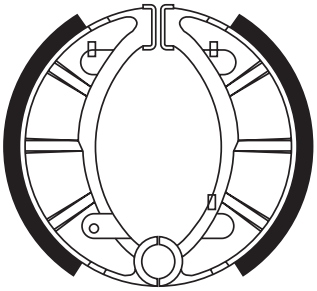

**GALFER MF 627 G2165**

| ↔ mm ↕ | 80 x 20 |
|---|---|

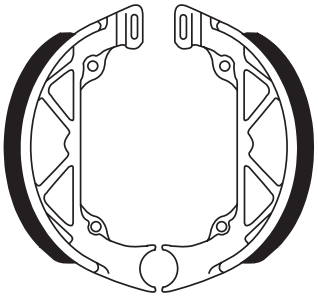

**GALFER MF 628 G2165**

| ↔ mm ↕ | 100 x 23 |
|---|---|

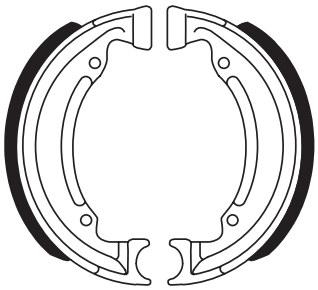

**GALFER MF 630 G2165**

| ↔ mm ↕ | 110 x 25 |
|---|---|

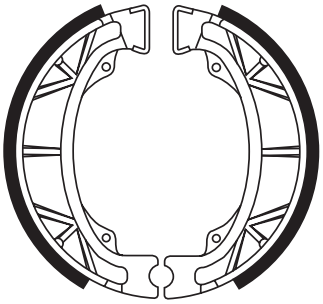

**GALFER MF 631 G2165**

| ↔ mm ↕ | 104 x 20 |
|---|---|

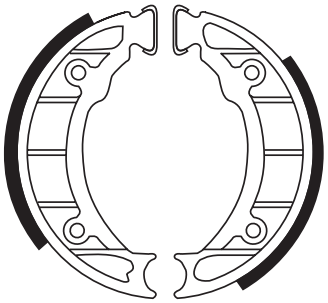

**GALFER MF 636 G2165**

| ↔ mm ↕ | 110 x 25 |
|---|---|

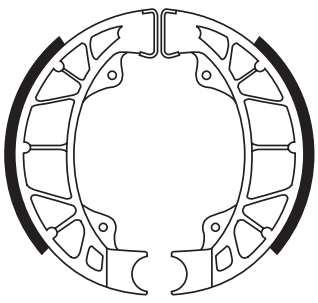

**GALFER MF 637 G2165**

↔ 110 mm x ↕ 22

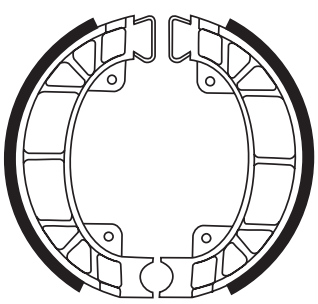

**GALFER MF 639 G2165**

↔ 125 mm x ↕ 25

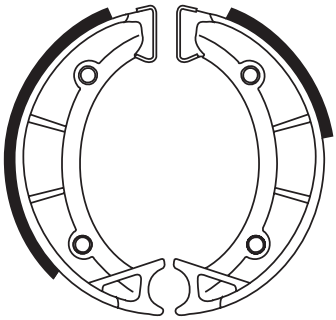

**GALFER MF 640 G2165**

↔ 130 mm x ↕ 28

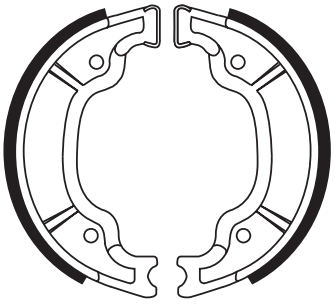

**GALFER MF 650 G2165**

↔ 130 mm x ↕ 25

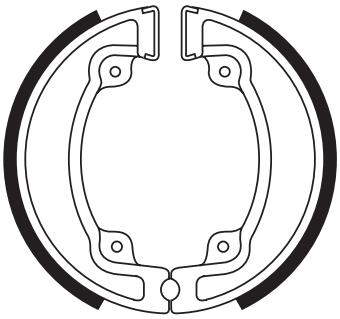

**GALFER MF 684 G2165**

↔ 160 mm x ↕ 30

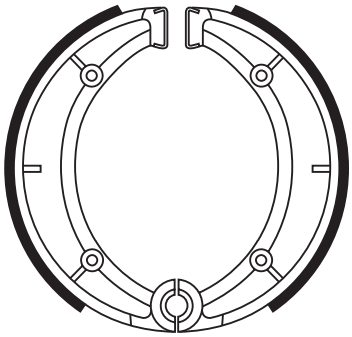

**GALFER MF 712 G2165**

↔ 125 mm x ↕ 25

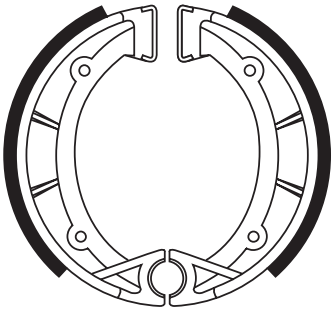

**GALFER MF 717 G2165**

↔ 110 mm x ↕ 20

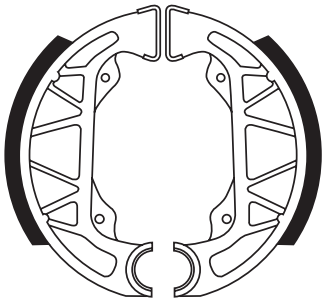

**GALFER MF 721 G2165**

↔ 118 mm x ↕ 24

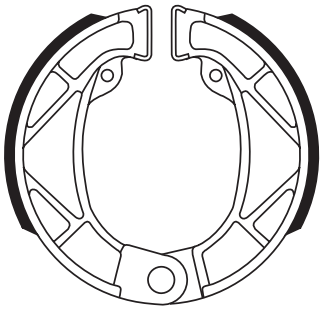

**GALFER MF 723 G2165**

↔ 120 mm x ↕ 25

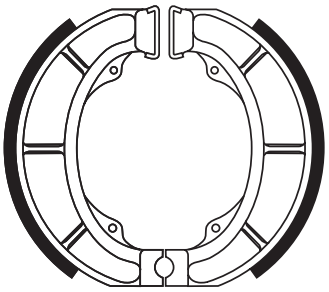

**GALFER MF 732 G2165**

↔ 110 mm x ↕ 25

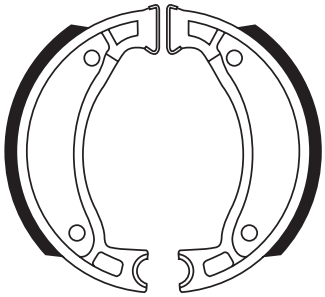

**GALFER MF 740 G2165**

↔ 130 mm x ↕ 25

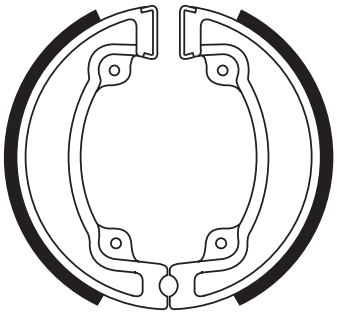

**GALFER MF 750 G2165**

↔ 90 mm x ↕ 18

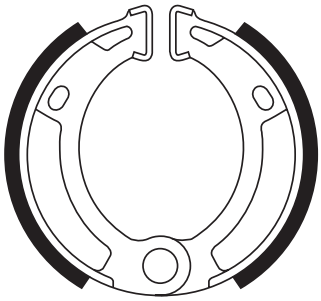

**GALFER MF 760 G2165**

↔ 104 mm x ↕ 22

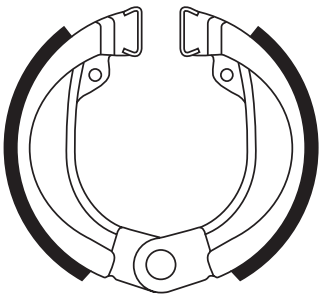

**GALFER MF 765 G2165**

↔ 152 mm x ↕ 25

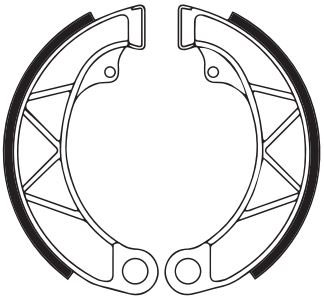

**GALFER MF 766 G2165**

↔ 152 mm x ↕ 25

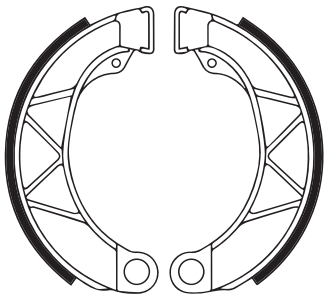

GALFER MOTO

# FK

## LINES & ACCESSOIRES
## LATIGUILLOS Y ACCESORIOS
### TUBI FRENO E ACCESSORI
### DURITES ET ACCESSOIRES

| AVAILABLE FINISHES • ACABADOS DISPONIBLES<br>FINITURE DISPONIBILI • FINIS DISPONIBLES | |
|---|---|
| Tube • Tubo • *Tubo* • Tube | Banjos • Banjos • *Banjo* • Banjos |
| Transparent • Transparente<br>*Trasparente* • Transparent | Silver brass • Latón plata<br>*Ottone silver* • Laiton argenté |
| Black • Negro<br>*Nero* • Noir | |
| Carbon • Carbono<br>*Carbono* • Carbono | |

| REFERENCES DESCRIPTION • DESCRIPCIÓN REFERENCIAS<br>DESCRIZIONE REFERENZA • DESCRIPTION RÉFÉRENCE | |
|---|---|
| C___R | *rear* • trasero • *posteriore • arrière* |
| C___3 | *3 lines* • 3 tubos • *3 tubi • 3 durit* |
| C___E | *clutch* • embrague • *frizione • embrayage* |
| C___G | *GP • GP • GP • GP* |
| C___C | *F&R full* • completo F&R • *completo F&R • complete F&R* |
| INCL | *included* • incluido • *incluso • inclus* |

| BRAND & MODEL<br>MARCA Y MODELO | C.C. | YEAR | | FRONT | REAR | CLUTCH |
|---|---|---|---|---|---|---|
| **APRILIA** | | | | | | |
| RS 50 REPLICA | 50 | 99 | 06 | C282 | C282R | |
| SR 50 | 50 | 93 | 93 | CE005 | - | |
| SR 50 ACQUA | 50 | 95 | 96 | CE005 | - | |
| SR 50 EUROPA, URBAND KID, VIPER | 50 | 94 | 94 | CE005 | - | |
| SR 50 FACTORY | 50 | 05 | | CE005 | CE005R | |
| SR 50 R | 50 | 05 | | CE005 | CE005R | |
| SR 50 RACING CATALIZADA | 50 | 00 | | CE005 | CE005R | |
| SR 50 REPLICA | 50 | 92 | 92 | CE005 | - | |
| SR 50 REPLICA | 50 | 93 | 93 | CE005 | - | |
| SR 50 STEALTH | 50 | 97 | 99 | CE005 | CE005R | |
| SR 50 URBAN | 50 | 92 | 92 | CE005 | - | |
| SR 50 VIPER | 50 | 92 | 92 | CE005 | - | |
| SR 50 VIPER | 50 | 94 | 94 | CE005 | - | |
| SR 50 WWW | 50 | 97 | 99 | CE005 | CE005R | |
| AF 1 125 FUTURA | 125 | 90 | | C779D | C779T | |
| RS 125 EXTREMA, REPLICA | 125 | 92 | 05 | C902 | C902R | |
| RS 250 | 250 | 95 | 97 | C119 | C119R | |
| RS 250 | 250 | 98 | | C247 | C247R | |
| CAPONORD RAID | 1000 | 03 | | C619 | C619R | |
| ETV CAPONORD | 1000 | 01 | | C619 | C619R | |
| RST FUTURA | 1000 | 01 | | C562 | C562R | C562E |
| RSV MILLE | 1000 | 98 | 00 | C259 | C259R | C259E |
| RSV MILLE | 1000 | 01 | | C395 | | |
| RSV MILLE R | 1000 | 00 | 00 | C259 | C259R | C259E |
| RSV MILLE R | 1000 | 01 | | C395 | | |
| RSV MILLE SP | 1000 | 00 | | C259 | C259R | C259E |
| RSV TUONO | 1000 | 02 | 05 | C433 | C433R | C433E |
| RSV TUONO R | 1000 | 02 | | C432 | C433R | C433E |
| RSV R FACTORY | 1000 | 04 | | C665 | | |
| SL 1000 FALCO | 1000 | 00 | | C292 | C292R | C292E |
| **BMW** | | | | | | |
| R 60/6 | 600 | 76 | | C257 | - | |
| F 650 | 650 | 93 | | C166 | C166R | |
| F 650 DAKAR | 650 | 00 | 01 | C279 | C279R | |
| F 650 GS | 650 | 00 | | C284 | C284R | |
| K 75 | 750 | 93 | | C164 | | |
| K 75 C, S | 750 | 87 | 92 | C205 | - | |
| R 80 GS, PARIS DAKAR | 800 | 81 | 87 | C168 | - | |
| R 850 R ROADSTER | 850 | 95 | 00 | C306 | C306R | |
| R 90 S | 900 | 75 | | C147 | - | |
| R 90/6 | 900 | 76 | | C233 | - | |
| K1 ABS | 1000 | 89 | | C137C | INCL | |
| R 100 /7 | 1000 | 76 | | CE022 | CE022R | |
| R 100 CS | 1000 | 81 | | C384 | | |
| R 100 GS | 1000 | 88 | 92 | C165 | - | |
| R 100 GS, PD, RT | 1000 | 93 | 94 | C288 | - | |
| R 100 R | 1000 | 92 | 94 | C170 | - | |
| R 100 S, T, RS, TR | 1000 | 78 | | C171 | | |
| S 1000 R NAKED | 1000 | 14 | | CE009 | CE009R | |
| S 1000 RR | 1000 | 09 | 14 | CE009 | CE009R | |
| K 1100 RS ABS | 1100 | 93 | | C245C | INCL | |
| K 1100 LT SPECIAL EDITION | 1100 | 95 | | C148 | | |
| K 100 RS, RT, LT | 1100 | 87 | | C148 | | |
| R 1100 GS ABS | 1100 | 94 | | C184C | INCL | |
| R 1100 GS NO ABS | 1100 | 94 | | C161 | C161R | |
| R 1100 RS | 1100 | 93 | 94 | C163 | C163R | |
| R 1100 RS NO ABS | 1100 | 95 | | C196 | | |
| R 1100 RT ABS | 1100 | 94 | 01 | C173C | INCL | |
| R 1100 RT NO ABS | 1100 | 94 | 01 | C172 | C172R | |

| BRAND<br>MARCA | MODEL<br>MODELO | | | C.C. | YEAR | FRONT | REAR | CLUTCH |
|---|---|---|---|---|---|---|---|---|
| R 1100 S NO ABS | 1100 | 98 | 00 | | C218 | C218R | | |
| R 1100 S | 1100 | 01 | | | C382 | C349R | | |
| R 1150 GS ABS | 1150 | 00 | 01 | | C265C | INCL | | |
| R 1150 GS | 1150 | 02 | | | C695C | INCL | | |
| R 1150 R ROCKESTER | 1150 | 03 | | | C349 | C349R | | |
| R 1150 RT | 1150 | 01 | | | C792 | | | |
| K 1200 RS ABS | 1200 | 97 | 00 | | C255C | INCL | | |
| K 1200 RS | 1200 | 01 | | | C793 | | | |
| R 1200 CRUISER | 1200 | 97 | | | C219 | C219R | | |
| **BOMBARDIER 4 Wheels** | | | | | | | | |
| DS 650 / BAJA DER. | 650 | 00 | | | C691 | C691R | | |
| DS 650 / BAJA IZQ. | 650 | 00 | | | C691 | C691R | | |
| **BUELL** | | | | | | | | |
| BLAST | 500 | 00 | | | C333 | C333R | | |
| 1125 R | 1125 | 08 | | | C726 | C726R | C726E | |
| X1 LIGHTNING | 1200 | 00 | | | C313 | | | |
| **CAGIVA** | | | | | | | | |
| MITO 125 EDDY | 125 | 93 | | | C846 | C846R | | |
| **CAN-AM 4 Wheels** | | | | | | | | |
| DS 90 X | 90 | 08 | | | C715 | C715R | | |
| DS 250 | 250 | 07 | | | C714 | C714R | | |
| DS 450 X | 450 | 08 | | | C713 | C713R | | |
| **DUCATI** | | | | | | | | |
| MONSTER 696 | 695 | 08 | | | C684 | C684R | C684E | |
| 748 DESMO QUATRO | 748 | 94 | 97 | | C016 | C016R | C016E | |
| 748 | 748 | 98 | 99 | | C016 | C016R | C016E | |
| 748 E/S | 748 | 00 | 02 | | C298 | C016R | C016E | |
| 748 R | 748 | 01 | 02 | | C332 | C396R | C396E | |
| 749 | 749 | 03 | | | C396 | C396R | C396E | |
| 749 S/R | 749 | 03 | | | C396 | C396R | C396E | |
| 750 F1 DESMO | 750 | 86 | | | C095 | C095R | C095E | |
| 750 F1 MONTJUICH | 750 | 86 | | | C095 | C095R | C095E | |
| 750 M MONSTER | 750 | 96 | | | C115 | C115R | C115E | |
| 750 PASO | 750 | 86 | | | C096 | C096R | C096E | |
| 750 PASO | 750 | 89 | | | C096 | C096R | C096E | |
| MONSTER 796 ABS | 796 | 10 | | | C788 | | | |
| MONSTER 800 S2R | 800 | 05 | | | C544 | C541R | C544E | |
| 848 | 848 | 08 | | | C673 | C673R | C673E | |
| 848 EVO | 848 | 10 | | | C728 | C728R | C728E | |
| 848 EVO CORSE SE | 848 | 12 | | | C728 | C728R | C728E | |
| 848 S | 848 | 08 | | | C673 | C673R | C673E | |
| 851 AA 8V STRADA | 851 | 88 | 89 | | C178 | C178R | C178E | |
| 851 REPLICA | 851 | 88 | 88 | | C178 | C178R | C178E | |
| 851 SPORT PRODUCTION | 851 | 90 | 91 | | C178 | C178R | C178E | |
| 851 STRADA | 851 | 89 | | | C178 | C178R | C178E | |
| 888 CORSA | 888 | 91 | 91 | | C180 | C180R | C180E | |
| 888 DESMO QUATTRO | 888 | 93 | 93 | | C180 | C180R | C180E | |
| 888 SPS | 888 | 92 | 92 | | C180 | C180R | C180E | |
| 888 STRADA | 888 | 94 | 95 | | C180 | C180R | C180E | |
| 900 M MONSTER | 900 | 93 | 00 | | C017 | C017R | C017E | |
| 900 SS | 900 | 91 | 97 | | C015 | C015R | C015E | |
| 900 SS | 900 | 98 | | | C225 | C225R | C225E | |
| 907 i.e. | 907 | 91 | | | C094 | C094R | C094E | |
| 916 STRADA | 916 | 94 | 98 | | C016 | C016R | C016E | |
| 916 SENNA | 916 | 94 | 97 | | C016 | C016R | C016E | |
| 916 SPS | 916 | 98 | 98 | | C016 | C016R | C016E | |
| ST 4 | 916 | 99 | | | C177 | C177R | C177E | |
| ST 2 944 | 944 | 97 | 98 | | C177 | C177R | C177E | |
| 996 S | 996 | 99 | 01 | | C298 | C298R | C298E | |
| 996 R | 996 | 99 | 01 | | C298 | C016R | C298E | |

**C***R:** rear · trasero | **C***CL:** clutch · embrague | **C***C:** full Front & Rear · completo Delantero y Trasero

| AVAILABLE FINISHES • ACABADOS DISPONIBLES<br>FINITURE DISPONIBILI • FINIS DISPONIBLES | |
|---|---|
| Tube • Tubo • *Tubo* • Tube | Banjos • Banjos • *Banjo* • Banjos |
| Transparent • Transparente<br>*Trasparente* • Transparent | Silver brass • Latón plata<br>*Ottone silver* • Laiton argenté |
| Black • Negro<br>*Nero* • Noir | |
| Carbon • Carbono<br>*Carbono* • Carbono | |

| REFERENCES DESCRIPTION • DESCRIPCIÓN REFERENCIAS<br>DESCRIZIONE REFERENZA • DESCRIPTION RÉFÉRENCE | |
|---|---|
| C___R | *rear* • trasero • *posteriore • arrière* |
| C___3 | *3 lines* • 3 tubos • *3 tubi • 3 durit* |
| C___E | *clutch* • embrague • *frizione • embrayage* |
| C___G | GP • *GP • GP • GP* |
| C___C | *F&R full* • completo F&R • *completo F&R • complete F&R* |
| INCL | *included* • incluido • *incluso • inclus* |

| BRAND<br>MARCA | MODEL<br>MODELO | | C.C. | YEAR | FRONT | REAR | CLUTCH |
|---|---|---|---|---|---|---|---|
| MONSTER S4R | 996 | 03 | 05 | C545 | C541R | C545E | |
| 998 R | 998 | 02 | | C332 | C396R | C396E | |
| 998 S | 998 | 02 | | C332 | C396R | C396E | |
| 999 R | 999 | 03 | | C540 | C396R | | |
| 999 S | 999 | 03 | | C540 | C396R | | |
| 1000 MONSTER S2R | 1000 | 06 | | C544 | C541R | C544E | |
| 1000 MONSTER S4R | 1000 | 03 | 05 | C545 | C541R | C545E | |
| 1000 MONSTER S4Rs | 1000 | 06 | | C541 | C541R | C541E | |
| MULTISTRADA 1000 S DS | 1000 | 06 | | C543 | C543R | C543E | |
| PAUL SMART 1000 | 1000 | 05 | | C724 | | | |
| 1098 | 1100 | 07 | 08 | C596 | C596R | C596E | |
| 1098 S | 1100 | 07 | 08 | C596 | C596R | C596E | |
| MONSTER | 1100 | 09 | | C729 | C729R | C729E | |
| MONSTER EVO | 1100 | 11 | | C729 | C729R | C729E | |
| MONSTER S | 1100 | 09 | | C729 | C729R | C729E | |
| MONSTER S (OHLINS) | 1100 | 09 | | C729 | C729R | C729E | |
| STREETFIGHTER | 1100 | 09 | | C745 | C745R | C745E | |
| STREETFIGHTER S | 1100 | 09 | | C745 | C745R | C745E | |
| 1198 S | 1198 | 09 | | C728 | C728R | C728E | |
| 1199 PANIGALE | 1199 | 12 | | C800 | C800R | C800E | |
| **GAS GAS** | | | | | | | |
| EC 125 | 125 | 94 | 00 | C668 | C668R | | |
| EC 125 | 125 | 01 | 14 | C668 | C668R | | |
| EC 200 | 200 | 01 | | C668 | C668R | | |
| EC 250 | 250 | 95 | 98 | C668 | C668R | | |
| EC 250 | 250 | 99 | 00 | C668 | C668R | | |
| EC 250 | 250 | 01 | | C668 | C668R | | |
| EC 250 FSE | 250 | 01 | | C668 | C668R | | |
| EC 300 | 300 | 99 | 00 | C668 | C668R | | |
| EC 300 | 300 | 01 | | C668 | C668R | | |
| EC 450 FSE | 450 | 03 | | C668 | C668R | | |
| **GAS GAS 4 Wheels** | | | | | | | |
| HP WILD 50 | 50 | 03 | | C19AD | C19AT | | |
| HP WILD 240 | 240 | 03 | | C19AD | C19AT | | |
| HP WILD 300 | 300 | 03 | | C19AD | C19AT | | |
| HP WILD 450 | 450 | 03 | | C19AD | C19AT | | |
| HP WILD 515 | 515 | 09 | | C19AD | C19AT | | |
| **GILERA-PIAGGIO** | | | | | | | |
| RUNNER 50 | 50 | 97 | 97 | CE002 | - | | |
| RUNNER 50 DD | 50 | 98 | | CE002 | CE002R | | |
| RUNNER 50 SP | 50 | 98 | 04 | CE002 | CE002R | | |
| RUNNER 50 SP | 50 | 05 | 05 | CE002 | CE002R | | |
| RUNNER 50 SP / PJ | 50 | 06 | | CE002 | CE002R | | |
| **HARLEY DAVIDSON** | | | | | | | |
| XL SPORTSTER CUSTOM | 883 | 00 | 03 | C526 | | | |
| XL SPORTSTER CUSTOM | 883 | 04 | | C524 | | | |
| XL SPORTSTER STANDARD | 883 | 04 | | C525 | | | |
| XL SPORTSTER CUSTOM | 1200 | 04 | | C524 | | | |
| XR 1200 | 1200 | 08 | 10 | C753 | C753R | | |
| XR 1200 X | 1200 | 10 | | C753 | C753R | | |
| FXDWG WIDE GLIDE | 1340 | 00 | 07 | C516 | | | |
| FXDBi STREET BOB | 1450 | 06 | 07 | C549 | | | |
| FXDi 35th ANIVERSARIO SUPER GLIDE | 1450 | 06 | | C551 | | | |
| FXDLi LOW RIDER (cast wheel) | 1450 | 06 | 07 | C550 | | | |
| FXDWG WIDE GLIDE | 1450 | 08 | | C552 | | | |
| FXDWGi WIDE GLIDE | 1450 | 04 | 05 | C557 | | | |
| FLSTF/i FAT BOY | 1340 | 00 | 06 | C515 | C517R | | |
| FXST/i SOFTAIL STANDARD | 1340 | 00 | 05 | C553 | | | |
| FXSTS/i SOFTAIL SPRINGER | 1340 | 00 | | C521 | | | |
| FLSTN/i SOFTAIL DE LUXE | 1450 | 05 | 07 | C548 | C517R | | |

| BRAND<br>MARCA | MODEL<br>MODELO | | C.C. | YEAR | FRONT | REAR | CLUTCH |
|---|---|---|---|---|---|---|---|
| FLSTSC/i SPRINGER CLASSIC | 1450 | 05 | | C555 | | | |
| FLSTSC/i SPRINGER CLASSIC SOFTAIL | 1450 | 06 | | C555 | | | |
| FXCWC ROCKER C | 1450 | 08 | | C748 | | | |
| FLHRS/i ROAD KING CUSTOM | 1340 | 04 | 07 | C527 | | | |
| FLHT ELECTRA GLIDE STANDARD | 1450 | 08 | | C749 | | | |
| FLHX/i STREET GLIDE | 1450 | 06 | 07 | C723 | | | |
| VRSCAW V-ROD | 1185 | 08 | | C699 | | | |
| VRSCD NIGHT ROD | 1185 | 05 | 08 | C699 | | | |
| VRSCDX NIGHT ROD SPECIAL | 1185 | 07 | | C699 | | | |
| VRSCX V-ROD | 1185 | 07 | 07 | C699 | | | |
| **HM** | | | | | | | |
| CRF 150 R / R2 | 150 | 08 | | C362 | C362R | | |
| **HONDA** | | | | | | | |
| SH 50 SCOOPY | 50 | 96 | | C14AD | - | | |
| CR 80 R | 80 | 90 | 96 | C262 | C262R | | |
| CR 80 R | 80 | 97 | 02 | C262 | C262R | | |
| CR 85 R | 85 | 03 | 05 | C262 | C262R | | |
| CR 85 R | 85 | 06 | | C480 | C480R | | |
| NSF 100 | 100 | 07 | | C718 | C718R | | |
| SH 100 SCOOPY | 100 | 96 | | C14AD | - | | |
| CBR 125 R | 125 | 04 | 10 | C29AD | C29AT | | |
| CR 125 R | 125 | 94 | 94 | C118 | C118R | | |
| CR 125 R | 125 | 95 | 97 | C118 | C118R | | |
| CR 125 R | 125 | 98 | 01 | C118 | C118R | | |
| CR 125 R | 125 | 02 | 04 | C118 | C423R | | |
| DYLAN 125 | 125 | 02 | | C900 | - | | |
| SH 125 SCOOPY | 125 | 01 | 04 | C900 | - | | |
| SH 125 i SCOOPY | 125 | 05 | 08 | C900 | - | | |
| SH 125 i SCOOPY (D-D) | 125 | 09 | 12 | CE007 | CE007R | | |
| SH 125 i SCOOPY (TAMBOR TRAS) | 125 | 09 | 12 | C900 | - | | |
| CR 125 R | 125 | 05 | 07 | C481 | C481R | | |
| CRF 150 F | 150 | 03 | 06 | C362 | - | | |
| CRF 150 R | 150 | 07 | | C480 | C566R | | |
| SH 150 SCOOPY | 150 | 01 | 04 | C900 | - | | |
| SH 150 i SCOOPY | 150 | 05 | | C900 | - | | |
| SH 150 i SCOOPY (D-D) | 150 | 09 | | CE007 | CE007R | | |
| SH 150 i SCOOPY (TAMBOR TRAS) | 150 | 09 | | C900 | - | | |
| CRF 230 F | 230 | 04 | | C362 | - | | |
| CRF 230 L | 230 | 08 | | C698 | C118R | | |
| CBR 250 R | 250 | 11 | | CE023 | CE023R | | |
| CBR 250 R C-ABS | 250 | 11 | | C776C | INCL | | |
| CMX REBEL 250 (NISSIN) | 250 | 96 | 97 | C029 | - | | |
| CMX REBEL 250 (NISSIN) | 250 | 98 | | C642 | - | | |
| CR 250 R | 250 | 87 | 87 | C058 | | | |
| CR 250 R | 250 | 88 | 88 | C058 | | | |
| CR 250 R | 250 | 89 | 89 | C058 | | | |
| CR 250 R | 250 | 90 | 91 | C058 | | | |
| CR 250 R | 250 | 92 | 94 | C118 | C118R | | |
| CR 250 R | 250 | 95 | 96 | C118 | C118R | | |
| CR 250 R | 250 | 97 | 01 | C118 | C118R | | |
| CR 250 R | 250 | 02 | 04 | C118 | C423R | | |
| CR 250 R | 250 | 05 | 07 | C481 | C481R | | |
| CRF 250 LD | 250 | 13 | | C778 | C778R | | |
| CRF 250 R | 250 | 04 | 07 | C304 | C423R | | |
| CRF 250 R | 250 | 08 | 14 | C304 | C630R | | |
| CRF 250 X | 250 | 04 | | C482 | C482R | | |
| NSR 250 R | 250 | 88 | 92 | C295 | C295R | | |
| VTR 250 | 250 | 98 | 08 | C153 | | | |
| XR 250 L, R | 250 | 91 | 93 | C361 | | | |
| XR 250 R | 250 | 84 | 87 | C472 | - | | |

**C***R:** rear · trasero | **C***CL:** clutch · embrague | **C***C:** full Front & Rear · completo Delantero y Trasero

| AVAILABLE FINISHES • ACABADOS DISPONIBLES<br>FINITURE DISPONIBILI • FINIS DISPONIBLES | |
|---|---|
| Tube • Tubo • *Tubo* • Tube | Banjos • Banjos • *Banjo* • Banjos |
| Transparent • Transparente<br>*Trasparente* • Transparent | Silver brass • Latón plata<br>*Ottone silver* • Laiton argenté |
| Black • Negro<br>*Nero* • Noir | |
| Carbon • Carbono<br>*Carbono* • Carbono | |

| REFERENCES DESCRIPTION • DESCRIPCIÓN REFERENCIAS<br>DESCRIZIONE REFERENZA • DESCRIPTION RÉFÉRENCE | |
|---|---|
| C___R | *rear* • trasero • *posteriore* • *arrière* |
| C___3 | *3 lines* • 3 tubos • *3 tubi* • *3 durit* |
| C___E | *clutch* • embrague • *frizione* • *embrayage* |
| C___G | GP • *GP* • *GP* • *GP* |
| C___C | *F&R full* • completo F&R • *completo F&R* • *complete F&R* |
| INCL | *included* • incluido • *incluso* • *inclus* |

| BRAND & MODEL<br>MARCA Y MODELO | C.C. | YEAR | | FRONT | REAR | CLUTCH |
|---|---|---|---|---|---|---|
| XR 250 R | 250 | 88 | 90 | C361 | | |
| XR 250 R | 250 | 03 | | C303 | C303R | |
| SH SCOOPY 300 | 300 | 07 | 10 | CE008 | CE008R | |
| SH SCOOPY 300 | 300 | 11 | | CE008 | CE008R | |
| XR 350 R | 350 | 84 | | C263 | - | |
| CB 1 | 400 | 89 | 90 | C188 | C188R | |
| XR 400 R | 400 | 96 | | C142 | C142R | |
| CB 450 N (BRASIL) | 450 | 85 | 85 | C154 | - | |
| CRF 450 F/R | 450 | 01 | 03 | C304 | C304R | |
| CRF 450 F/R | 450 | 04 | 07 | C304 | C423R | |
| CRF 450 F/R | 450 | 08 | 14 | C304 | C630R | |
| CRF 450 X | 450 | 04 | | C482 | C482R | |
| CRF 450 XR LD | 450 | 13 | | C482 | | |
| CB 500 F | 500 | 13 | | CE053 | CE053R | |
| CB 500 X | 500 | 13 | | CE054 | CE054R | |
| CBR 500 R | 500 | 13 | | CE052 | CE052R | |
| CX 500 TURBO, T, C | 500 | 81 | | C422 | C422R | |
| GL 500 I | 500 | 82 | | C127 | | |
| VF 500 F, F2 | 500 | 83 | | C271 | C271R | |
| XR 500 R | 500 | 84 | | C263 | - | |
| 599 (USA) | 600 | 00 | 06 | C437 | C437R | |
| 599 (USA) | 600 | 07 | | C678 | C678R | |
| CB 600 HORNET /S | 600 | 00 | 06 | C437 | C437R | |
| CB 600 HORNET | 600 | 07 | | C678 | C678R | |
| CBR 600 F/R HURRICANE | 600 | 87 | 90 | C002 | C002R | |
| CBR 600 F | 600 | 88 | 90 | C002 | C002R | |
| CBR 600 F2 | 600 | 91 | 94 | C002 | C002R | |
| CBR 600 F3 | 600 | 95 | 98 | C003 | C003R | |
| CBR 600 F4 | 600 | 99 | 00 | C222 | C222R | |
| CBR 600 F4 i SPORT | 600 | 01 | 10 | C222 | C222R | |
| CBR 600 RR | 600 | 03 | 04 | C348 | C348R | |
| CBR 600 RR | 600 | 05 | 06 | C458 | C458R | |
| CBR 600 RR | 600 | 07 | | C588 | C588R | |
| CBR 600 RR | 600 | 09 | | C588 | C588R | |
| CBR 600 RR C-ABS | 600 | 09 | 12 | C717C | INCL | |
| CBR 600 RR C-ABS | 600 | 13 | | C717C | INCL | |
| VT 600 SHADOW | 600 | 88 | 93 | C202 | - | |
| VT 600 SHADOW | 600 | 06 | | C488 | - | |
| VT 600 CD SHADOW VLX | 600 | 94 | | C032 | - | |
| XL 600 V TRANSALP | 600 | 87 | 90 | C110 | - | |
| XL 600 V TRANSALP | 600 | 91 | 93 | C110 | | |
| XL 600 V TRANSALP | 600 | 94 | 96 | C110 | | |
| XR 600 R | 600 | 84 | 86 | C046 | - | |
| XR 600 R | 600 | 87 | 90 | C046 | - | |
| XR 600 R | 600 | 91 | 92 | C046 | C046R | |
| XR 600 R | 600 | 93 | | C208 | C208R | |
| CX 650 TURBO, C, E, T , TD | 650 | 83 | | C043 | C043R | |
| NT 650 HAWK GT | 650 | 88 | | C001 | C001R | |
| NX 650 DOMINATOR | 650 | 87 | 88 | C771D | - | |
| XR 650 L | 650 | 93 | | C141 | C141R | |
| XR 650 R | 650 | 00 | | C141 | C141R | |
| CB 700 SC NIGHTHAWK | 700 | 84 | | C248 | - | C248E |
| MAGNA 700 | 700 | 84 | | C230 | | C730E |
| NC 700 S | 700 | 12 | | CE034 | CE034R | |
| SABRE 700 | 700 | 84 | | C228 | | C228E |
| VF 700 S, C | 700 | 84 | | C067 | - | |
| VT 700 SC | 700 | 84 | | C337 | - | C337E |
| CB 750 C | 750 | 81 | | C299 | - | |
| CB 750 NIGHTHAWK | 750 | 91 | | C651 | - | |
| NC 750 S | 750 | 14 | | CE034 | CE034R | |

| BRAND<br>MARCA | MODEL<br>MODELO | C.C. | YEAR | | FRONT | REAR | CLUTCH |
|---|---|---|---|---|---|---|---|
| RVF 750 RR (RC45) | | 750 | 94 | | C175 | C175R | |
| VF 750 C | | 750 | 82 | | C730 | - | C730E |
| VF 750 C MAGNA | | 750 | 95 | | C203 | - | |
| VF 750 MAGNA, SABRE | | 750 | 82 | | C230 | - | C730E |
| VFR 750 F | | 750 | 86 | 87 | C285 | C285R | C285E |
| VFR 750 F,J,L,M | | 750 | 88 | 89 | C285 | C285R | C285E |
| VFR 750 F | | 750 | 90 | 93 | C004 | C004R | C004E |
| VFR 750 F | | 750 | 94 | 97 | C004 | C004R | C004E |
| VFR 750 R (RC30) | | 750 | 88 | | C070 | C070R | C070E |
| VT 750 C SHADOW | | 750 | 97 | | C235 | - | |
| VT 750 DC BLACK WIDOW | | 750 | 02 | | C435 | - | |
| VT 750 DC SPIRIT | | 750 | 07 | | C235 | - | |
| PC 800 PACIFIC COAST | | 800 | 88 | | C378 | - | |
| VFR 800 | | 800 | 98 | 00 | C195C | INCL | INCL |
| VFR 800 Vtec (INTERCEPTOR USA) | | 800 | 01 | 05 | C195C | INCL | INCL |
| VFR 800 | | 800 | 06 | | C744 | C744R | C744E |
| VFR 800 ABS | | 800 | 06 | 13 | C425C | INCL | INCL |
| 919 (USA) | | 900 | 01 | | C310 | C310R | |
| CB 900 C | | 900 | 82 | | C334 | C334R | |
| CB 900 F2 BOL DOR | | 900 | 81 | 81 | C371 | C371R | |
| CB 900 FC, F2C | | 900 | 82 | | C371 | C371R | |
| CB 900 SF HORNET | | 900 | 01 | | C310 | C310R | |
| CBR 900 RR | | 900 | 92 | 92 | C005 | C005R | |
| CBR 900 RR | | 900 | 93 | 97 | C005 | C005R | |
| CBR 900 RR | | 900 | 98 | 99 | C183 | C183R | |
| CBR 900 RR (929) | | 929 | 00 | 01 | C253 | C253R | |
| CBR 900 RR (954) | | 954 | 02 | | C253 | C253R | |
| CB 1000 BIG ONE | | 1000 | 93 | | C108 | C108R | C108E |
| CB 1000 R, C | | 1000 | 83 | | C369 | | |
| CB 1000 R | | 1000 | 08 | | C767 | C767R | |
| CBR 1000 F DUAL | | 1000 | 93 | 99 | CE020 | CE020R | |
| CBR 1000 R HURRICANE | | 1000 | 88 | | C390 | C390R | C390E |
| CBR 1000 RR FIREBLADE | | 1000 | 04 | 05 | C424 | C424R | C424E |
| CBR 1000 RR FIREBLADE | | 1000 | 06 | 07 | C424 | C536R | C424E |
| CBR 1000 RR FIREBLADE | | 1000 | 08 | | C641 | C641R | |
| CBR 1000 RR FIREBLADE C-ABS | | 1000 | 09 | | C716 | | |
| CBX 1000 B, R | | 1000 | 81 | | C377 | C377R | |
| VF 1000 F2 | | 1000 | 86 | 87 | C221 | C221R | C221E |
| VTR 1000 F FIRESTORM | | 1000 | 97 | 99 | C114 | C114R | C114E |
| VTR 1000 F SUPER HAWK 996 (USA) | | 1000 | 97 | 99 | C114 | C114R | C114E |
| VTR 1000 SP-1 | | 1000 | 00 | 01 | C114 | C114R | C114E |
| VTR 1000 SP-2 | | 1000 | 02 | | C252 | C252R | C252E |
| RVT 1000 RC 51 (USA) | | 1000 | 02 | | C252 | C252R | C252E |
| CB 1100 F, R, RB, DC, RD | | 1100 | 81 | | C391 | C391R | |
| CBR 1100 XX SUP.BLACKBIRD | | 1100 | 97 | 99 | C323 | C323R | C323E |
| CBR 1100 XX i SUP.BLACKBIRD | | 1100 | 00 | | C323 | C323R | C323E |
| GL 1100 A | | 1100 | 79 | 81 | C111 | C111R | |
| ST 1100 PAN-EUROPEAN | | 1100 | 90 | 90 | C128 | C128R | C128E |
| ST 1100 PAN-EUROPEAN | | 1100 | 91 | 95 | C128 | C128R | C128E |
| ST 1100 PAN EUROPEAN | | 1100 | 96 | 01 | C152 | C152R | C152E |
| ST 1100 PAN EUROPEAN CBS/ABS/TCS | | 1100 | 96 | 01 | C702C | INCL | INCL |
| VF 1100 C, S | | 1100 | 83 | 87 | C342 | C342R | |
| VT 1100 C2 ACE | | 1100 | 97 | | C034 | C034R | C034E |
| VT 1100 SHADOW | | 1100 | 88 | | C061 | C061R | C061E |
| GL 1200 DX | | 1200 | 86 | | C052 | C052R | |
| GL 1200 GOLD-WING, AG, D | | 1200 | 85 | | C403 | C403R | |
| VT 1300 CS | | 1300 | 10 | | C734 | C734R | |
| VTX 1300 S/C RETRO | | 1300 | 03 | | C338 | C338R | |
| F6C 1500 VALKYRIA | | 1500 | 97 | | C049 | C049R | C049E |
| GLX 1500 DX | | 1500 | 88 | | C215 | C215R | |

**C***R:** rear · trasero | **C***CL:** clutch · embrague | **C***C:** full Front & Rear · completo Delantero y Trasero

| AVAILABLE FINISHES • ACABADOS DISPONIBLES<br>FINITURE DISPONIBILI • FINIS DISPONIBLES | |
|---|---|
| Tube • Tubo • *Tubo* • Tube | Banjos • Banjos • *Banjo* • Banjos |
| Transparent • Transparente<br>*Trasparente* • Transparent | Silver brass • Latón plata<br>*Ottone silver* • Laiton argenté |
| Black • Negro<br>*Nero* • Noir | |
| Carbon • Carbono<br>*Carbono* • Carbono | |

| REFERENCES DESCRIPTION • DESCRIPCIÓN REFERENCIAS<br>DESCRIZIONE REFERENZA • DESCRIPTION RÉFÉRENCE | |
|---|---|
| C___R | *rear* • trasero • *posteriore • arrière* |
| C___3 | *3 lines* • 3 tubos • *3 tubi • 3 durit* |
| C___E | *clutch* • embrague • *frizione • embrayage* |
| C___G | GP • *GP • GP • GP* |
| C___C | *F&R full* • completo F&R • *completo F&R • complete F&R* |
| INCL | *included* • incluido • *incluso • inclus* |

| BRAND MARCA | MODEL MODELO | | | C.C. | YEAR | FRONT | REAR | CLUTCH |
|---|---|---|---|---|---|---|---|---|
| GL 1800 GOLD WING | 1800 | 01 | 05 | | C533C | INCL | INCL | |
| VTX 1800 C | 1800 | 01 | | | C352C | INCL | INCL | |
| VTX 1800 RETRO | 1800 | 03 | | | C353C | INCL | INCL | |
| **HONDA BRAZIL** | | | | | | | | |
| CRF 230 F | 230 | 04 | | | C362 | - | | |
| **HONDA INDONESIA** | | | | | | | | |
| CBR 250 R | 250 | 11 | | | CE023 | CE023R | | |
| **HONDA MALASIA** | | | | | | | | |
| CBR 250 R | 250 | 11 | | | CE023 | CE023R | | |
| CBR 1000 RR FIREBLADE C-ABS | 1000 | 09 | | | C716 | | | |
| **HONDA 4 Wheels** | | | | | | | | |
| TRX 250 EX | 250 | 01 | | | C305 | - | | |
| TRX 250 R | 250 | 87 | 89 | | C146 | C146R | | |
| TRX 250 RECON | 250 | 03 | 05 | | C357 | - | | |
| TRX 250 X9 | 250 | 09 | | | C305 | - | | |
| TRX 300 EX | 300 | 93 | 08 | | C316 | | | |
| FL 400 R PILOT | 400 | 89 | 90 | | C469 | C469R | | |
| TRX 400 EX | 400 | 99 | 8 | | C261 | C261R | | |
| TRX 400 X9 | 400 | 09 | | | C261 | C261R | | |
| TRX 450 R | 450 | 04 | | | C418 | C418R | | |
| TRX 650 RINCON | 650 | 03 | | | C359 | | | |
| TRX 700 XX | 700 | 08 | | | C653 | C653R | | |
| **HUSQVARNA** | | | | | | | | |
| 85 TC 17/14 | 85 | 14 | | | C762 | C762R | | |
| 85 TC 19/16 | 85 | 14 | | | C762 | C762R | | |
| **KAWASAKI** | | | | | | | | |
| KX 65 | 65 | 00 | 04 | | C312 | C312R | | |
| KX 65 | 65 | 05 | | | C468 | C468R | | |
| KX 80 | 80 | 93 | 96 | | C314 | | | |
| KX 80 R7 KX 80-II | 80 | 97 | 99 | | C289 | C289R | | |
| KX 85 | 85 | 00 | 03 | | C289 | C289R | | |
| KX 100 | 100 | 97 | | | C289 | C289R | | |
| KX 125 | 125 | 89 | 94 | | C209 | | | |
| KX 125 | 125 | 95 | 02 | | C187 | C187R | | |
| KX 125 | 125 | 03 | 03 | | C187 | C650R | | |
| KX 125 | 125 | 04 | 05 | | C412 | C650R | | |
| KX 125 | 125 | 06 | | | C187 | C650R | | |
| KLX 140 L | 140 | 08 | | | C645 | C645R | | |
| KDX 220 | 220 | 99 | | | C206 | C206R | | |
| EX 250 NINJA F | 250 | 88 | 01 | | C249 | C249R | | |
| KL 250 SUPER SHERPA | 250 | 00 | | | C654 | C654R | | |
| KLR 250 | 250 | 84 | 87 | | C461 | - | | |
| KLR 250 ENDURO | 250 | 88 | | | C461 | - | | |
| KLX 250 S | 250 | 08 | | | C649 | C649R | | |
| KLX 250 SF | 250 | 09 | | | C722 | C649R | | |
| KX 250 | 250 | 83 | 84 | | C287 | | | |
| KX 250 | 250 | 85 | 86 | | C287 | - | | |
| KX 250 | 250 | 89 | 93 | | C209 | | | |
| KX 250 | 250 | 94 | 94 | | C187 | C187R | | |
| KX 250 | 250 | 95 | 02 | | C187 | C187R | | |
| KX 250 | 250 | 03 | 03 | | C187 | C650R | | |
| KX 250 | 250 | 04 | 05 | | C477 | C466R | | |
| KX 250 | 250 | 06 | | | C477 | C466R | | |
| KX 250 F | 250 | 04 | 05 | | C412 | C412R | | |
| KX 250 F | 250 | 06 | 10 | | C477 | C412R | | |
| KX 250 F | 250 | 11 | 14 | | CE041 | CE041R | | |
| NINJA 250 R | 250 | 08 | 12 | | C674 | C674R | | |
| KLX 300 R | 300 | 96 | | | C227 | C227R | | |
| NINJA 300 R | 300 | 13 | | | C674 | C674R | | |
| NINJA 300 R SP (ABS) | 300 | 13 | | | C786C | INCL | | |

| BRAND MARCA | MODEL MODELO | | | C.C. | YEAR | FRONT | REAR | CLUTCH |
|---|---|---|---|---|---|---|---|---|
| KLX 400 R | 400 | 03 | | | C264 | C264R | | |
| KLX 450 R | 450 | 07 | | | C638 | C638R | | |
| KX 450 F | 450 | 06 | 10 | | C477 | C412R | | |
| KX 450 F | 450 | 11 | 14 | | CE041 | CE041R | | |
| EN 500 VULCAN | 500 | 94 | | | C023 | - | | |
| KX 500 | 500 | 89 | 93 | | C209 | | | |
| KX 500 | 500 | 94 | 94 | | C209 | | | |
| KX 500 | 500 | 95 | | | C187 | C187R | | |
| GPZ 550 | 550 | 84 | | | C104 | C104R | | |
| ZX-6R | 600 | 95 | 97 | | C041 | C041R | | |
| ZX-6R | 600 | 98 | 99 | | C186 | C186R | | |
| ZX-6R | 600 | 00 | 02 | | C186 | C186R | | |
| ZX-6RR | 600 | 03 | 04 | | C363 | C363R | | |
| ZX-6RR | 600 | 05 | 06 | | C459 | C459R | | |
| ZX-6R | 600 | 07 | 08 | | C584 | C584R | | |
| ZX-6R | 600 | 09 | | | C584 | C719R | | |
| ZX-6R 636 | 636 | 02 | 02 | | C186 | C186R | | |
| ZX-6R 636 | 636 | 03 | 04 | | C363 | C363R | | |
| ZX-6R 636 | 636 | 05 | 12 | | C459 | C459R | | |
| ZX-6R 636 | 636 | 13 | | | C584 | C584R | | |
| ZX-6R 636 ABS | 636 | 13 | | | C805C | INCL | | |
| ER-6 F / NINJA 650 R (USA) RIGHT / DER | 650 | 05 | | | C496 | C496R | | |
| ER-6 N RIGHT / DER | 650 | 05 | | | C496 | C496R | | |
| KLR 650 | 650 | 08 | | | C597 | C597R | | |
| KLR 650 TENGAI | 650 | 89 | 91 | | C102 | C102R | | |
| KLX 650 R | 650 | 93 | | | C101 | C101R | | |
| KLX 650 S | 650 | 93 | | | C134 | C134R | | |
| VERSYS 650 RIGHT / DER | 650 | 06 | 07 | | C680 | C680R | | |
| VERSYS 650 RIGHT / DER | 650 | 08 | 09 | | C647 | C647R | | |
| VERSYS 650 RIGHT / DER | 650 | 10 | 14 | | C647 | C647R | | |
| W 650 | 650 | 99 | | | C274 | - | | |
| GPZ 750 R | 750 | 83 | 86 | | C339 | C339R | | |
| VN 750 VULCAN | 750 | 93 | | | C024 | - | | |
| Z 750 LEFT/IZQ | 750 | 04 | 06 | | C476 | | | |
| Z 750 RIGHT/DER | 750 | 04 | 06 | | C476 | C476R | | |
| Z 750 S LEFT/IZQ | 750 | 05 | 06 | | C476 | | | |
| Z 750 S RIGHT/DER | 750 | 05 | 06 | | C476 | C476R | | |
| Z 750 | 750 | 07 | | | C679 | C679R | | |
| ZR-7 S DER./RIGHT | 750 | 99 | 04 | | C256 | | | |
| ZR-7 S IZQ/LEFT | 750 | 99 | 04 | | C256 | C256R | | |
| ZR-7 S DER./RIGHT | 750 | 05 | | | C460 | | | |
| ZR-7 S IZQ/LEFT | 750 | 05 | | | C460 | C460R | | |
| ZX 750 F2 NINJA | 750 | 88 | | | C278 | C278R | C278E | |
| ZX 7 RR (ZX750P1) | 750 | 96 | | | C150 | C150R | C150E | |
| VN 800 | 800 | 94 | 97 | | C025 | | | |
| VN 800 DRIFTER | 800 | 99 | | | C636 | C636R | C636E | |
| Z 800 | 800 | 13 | | | CE048 | CE048R | | |
| Z 800 ABS | 800 | 13 | | | CE049 | | | |
| Z 800e ABS | 800 | 13 | | | CE049 | | | |
| VN 900 | 900 | 07 | | | C582 | C581R | | |
| VN 900 CLASIC | 900 | 06 | | | C581 | C581R | | |
| ZX-9R NINJA | 900 | 96 | 97 | | C008 | C008R | C008E | |
| ZX-9R NINJA | 900 | 98 | 99 | | C151 | C151R | | |
| ZX-9R NINJA | 900 | 00 | 01 | | C151 | C151R | | |
| ZX-9R NINJA | 900 | 02 | | | C151 | C151R | | |
| KZ 1000 J, K, M P, R, MK2M , D3 | 1000 | 80 | | | C176 | | | |
| Z 1000 | 1000 | 03 | 06 | | C376 | C376R | | |
| Z 1000 | 1000 | 07 | 08 | | C583 | C583R | | |
| Z 1000 | 1000 | 08 | 09 | | C633 | C633R | | |
| Z 1000 | 1000 | 10 | 14 | | C743 | C743R | | |

**C***R:** rear · trasero | **C***CL:** clutch · embrague | **C***C:** full Front & Rear · completo Delantero y Trasero

| AVAILABLE FINISHES • ACABADOS DISPONIBLES<br>FINITURE DISPONIBILI • FINIS DISPONIBLES | |
|---|---|
| Tube • Tubo • *Tubo* • Tube | Banjos • Banjos • *Banjo* • Banjos |
| Transparent • Transparente<br>*Trasparente* • Transparent | Silver brass • Latón plata<br>*Ottone silver* • Laiton argenté |
| Black • Negro<br>*Nero* • Noir | |
| Carbon • Carbono<br>*Carbono* • Carbono | |

| REFERENCES DESCRIPTION • DESCRIPCIÓN REFERENCIAS<br>DESCRIZIONE REFERENZA • DESCRIPTION RÉFÉRENCE | |
|---|---|
| C___R | *rear* • trasero • *posteriore • arrière* |
| C___3 | *3 lines* • 3 tubos • *3 tubi • 3 durit* |
| C___E | *clutch* • embrague • *frizione • embrayage* |
| C___G | GP • *GP • GP • GP* |
| C___C | *F&R full* • completo F&R • *completo F&R • complete F&R* |
| INCL | *included* • incluido • *incluso • inclus* |

| BRAND & MODEL<br>MARCA Y MODELO | C.C. | YEAR | | FRONT | REAR | CLUTCH |
|---|---|---|---|---|---|---|
| Z 1000 ABS | 1000 | 14 | | C803C | INCL | |
| ZG 1000 CONCOURS | 1000 | 86 | 93 | C386 | C106R | C386E |
| ZG 1000 CONCOURS | 1000 | 94 | | C106 | C106R | C106E |
| ZL 1000 | 1000 | 87 | | C293 | C293R | C293E |
| ZX 10 | 1000 | 86 | | C098 | C098R | C098E |
| ZX 10R | 1000 | 04 | 05 | C415 | C415R | |
| ZX 10R | 1000 | 06 | 07 | C495 | C495R | |
| ZX 10R | 1000 | 08 | 10 | C646 | C646R | |
| ZX 10R | 1000 | 11 | | CE043 | CE043R | |
| ZX 10R ABS | 1000 | 11 | | C785 | | |
| ZX 1000 RX NINJA | 1000 | 88 | | C124 | | |
| GPZ 1100 (ZX1100E1) LEFT/IZQ | 1100 | 95 | | C114 | | |
| GPZ 1100 (ZX1100E1) RIGHT/DER | 1100 | 95 | | C114 | C114R | |
| GPZ 1100 S | 1100 | 95 | | C144 | C144R | C144E |
| ZEPHYR 1100 | 1100 | 93 | 95 | C103 | C103R | C103E |
| ZRX 1100 | 1100 | 97 | 00 | C242 | C242R | C242E |
| ZX 1100 | 1100 | 93 | | C010 | C010R | C010E |
| ZZR 1200 | 1200 | 01 | | C326 | C326R | C326E |
| ZRX 1200 S | 1200 | 02 | 03 | C242 | C242R | C242E |
| ZRX 1200 S | 1200 | 04 | | C242 | C242R | C242E |
| ZX-12 R | 1200 | 00 | 03 | C260 | C260R | |
| ZX-12 R | 1200 | 04 | | C416 | C416R | |
| GTR 1400 | 1400 | 07 | 09 | C626 | C626R | |
| ZG 1400 CONCOURS | 1400 | 08 | | C626 | C626R | C625E |
| ZG 1400 CONCOURS ABS | 1400 | 08 | 09 | C625 | C625R | C625E |
| ZG 1400 CONCOURS ABS | 1400 | 10 | | C768 | C625R | C625E |
| ZX-14 R | 1400 | 06 | | C484 | C484R | C484E |
| ZX-14 R ABS | 1400 | 14 | | C799C | | |
| VN 1500 MEAN STREAK | 1500 | 01 | | C302 | C302R | C302E |
| VN-CLASSIC | 1500 | 96 | 97 | C026 | C099R | |
| VN-EASSIC Fi | 1500 | 00 | | C670 | C670R | C670E |
| VN-CLASSIC TOURER LEFT/IZQ | 1500 | 98 | 99 | C367 | | |
| VN-EASSIC TOURER RIGHT/DER | 1500 | 98 | 99 | C367 | C367R | C367E |
| VN 1600 MEAN STREAK | 1600 | 04 | 04 | C440 | C302R | C302E |
| VN 1600 MEAN STREAK | 1600 | 05 | | C487 | | |
| VN 1600 SUMO/EASSIC RIGHT/DER | 1600 | 03 | | C411 | | C411E |
| VN 1600 NOMAD LEFT/IZQ | 1600 | 05 | | C487 | | |
| VN 1600 NOMAD RIGHT/DER | 1600 | 05 | | C487 | C487R | |
| VN 1700 CLASSIC LEFT/IZQ | 1700 | 09 | | C708 | | |
| VN 1700 CLASSIC RIGHT/DER | 1700 | 09 | | C708 | C708R | C708E |
| VN 1700 VOYAGER CUSTOM ABS | 1700 | 11 | | C802C | INCL | |
| VN 2000 | 2000 | 04 | | CE028 | | |
| **KAWASAKI INDONESIA** | | | | | | |
| KX 65 | 65 | 05 | | C468 | C468R | |
| NINJA 250 R | 250 | 08 | 12 | C674 | C674R | |
| ZX-6R | 600 | 09 | | C584 | C719R | |
| ER-6 N RIGHT / DER | 650 | 09 | | C496 | C496R | |
| **KAWASAKI MALASIA** | | | | | | |
| KX 65 | 65 | 05 | | C468 | C468R | |
| KLX 250 SF | 250 | 09 | | C722 | C649R | |
| NINJA 250 R | 250 | 08 | 12 | C674 | C674R | |
| Z 250 | 250 | 13 | | C674 | C674R | |
| ER-6 F / RIGHT / DER | 650 | 05 | | C496 | C496R | |
| ER-6 N RIGHT / DER | 650 | 05 | | C496 | C496R | |
| VERSYS 650 RIGHT / DER | 650 | 10 | | C647 | C647R | |
| Z 800 | 800 | 13 | | CE048 | CE048R | |
| Z 800 ABS | 800 | 13 | | CE049 | | |
| Z 800e ABS | 800 | 13 | | CE049 | | |
| **KAWASAKI 4 Wheels** | | | | | | |
| KSF 250 A1-> A7 MOJAVE | 250 | 87 | 93 | C394 | C394R | |

| BRAND<br>MARCA | MODEL<br>MODELO | C.C. | YEAR | | FRONT | REAR | CLUTCH |
|---|---|---|---|---|---|---|---|
| | KXF 250 A1,A2 TECATE | 250 | 87 | 88 | C368 | | |
| | KFX 400 | 400 | 03 | | C308 | C308R | |
| | KFX 450 R RIGHT/DER. | 450 | 07 | | C589 | C589R | |
| | KFX 700 IZQ. | 700 | 03 | | C364 | - | |
| | KFX 700 TEAM GREEN IZQ. | 700 | 05 | | C364 | - | |
| **KTM** | | | | | | | |
| | 65 SX | 65 | 04 | 08 | C763 | C763R | |
| | 65 SX | 65 | 09 | | C763 | C763R | |
| | 65 XC | 65 | 08 | | C763 | C763R | |
| | 85 SX | 85 | 11 | 11 | C762 | C762R | |
| | 85 SX 17/14 | 85 | 12 | | C762 | C762R | |
| | 85 SX 19/16 | 85 | 13 | | C762 | C762R | |
| | 125 DUKE | 125 | 11 | | CE039 | CE039R | |
| | 125 DUKE ABS | 125 | 14 | | CE044C | INCL | |
| | 125 SX | 125 | 04 | | C427 | C428R | |
| | 200 DUKE | 200 | 12 | | CE039 | CE039R | |
| | 200 DUKE ABS | 200 | 14 | | CE044C | INCL | |
| | 250 SX | 250 | 03 | | C427 | C428R | |
| | 300 EXC | 300 | 03 | 03 | C317 | C317R | C317E |
| | 300 EXC | 300 | 04 | | C428 | C428R | |
| | 300 EXC - E | 300 | 08 | | C742 | C742R | |
| | 300 XC / W | 300 | 06 | | C742 | C742R | |
| | 350 SX F | 350 | 11 | | C761 | C761R | |
| | 390 DUKE | 390 | 13 | | CE039 | CE039R | |
| | 390 DUKE ABS | 390 | 14 | | CE044C | INCL | |
| | 400 EXC | 400 | 04 | | C317 | C317R | C317E |
| | 450 EXC | 450 | 04 | | C428 | C428R | |
| | 450 EXC - R | 450 | 08 | | C742 | C742R | |
| | 450 SXF | 450 | 07 | | C761 | C761R | |
| | 525 EXC | 525 | 03 | 03 | C317 | C317R | C317E |
| | 525 EXC | 525 | 04 | | C428 | C428R | |
| | 530 EXC - R | 530 | 08 | | C742 | C742R | |
| | 560 SMR | 560 | 07 | | C617 | | |
| | 640 LC4 ADVENTURE R | 640 | 99 | 05 | C428 | C450R | C450E |
| | 690 DUKE | 690 | 12 | | CE040 | CE040R | |
| | 690 SMC R ABS | 690 | 13 | | CE045C | INCL | |
| | 990 ADVENTURE R | 990 | 09 | | C721 | | |
| **KTM 4 Wheels** | | | | | | | |
| | 450 XC | 450 | 08 | | C637 | | |
| | 525 XC | 525 | 08 | | C637 | C637R | |
| **KYMCO 4 Wheels** | | | | | | | |
| | KXR 250 SPORT | 250 | 04 | | C18AD | C18AT | |
| | MXU 250 | 250 | 05 | | C18AD | C18AT | |
| | MXU 300 | 300 | 05 | | C18AD | C18AT | |
| **PEUGEOT** | | | | | | | |
| | ELYSEO | 50 | 98 | | C901 | - | |
| | SPEEDFIGHT LC | 50 | 97 | | CE004 | CE004R | |
| | ELYSEO 100 | 100 | 98 | | C901 | - | |
| **PIAGGIO** | | | | | | | |
| | VESPA 50 ET2 | 50 | 00 | | CE019 | - | |
| | VESPA 50 ET4 | 50 | 01 | | CE019 | - | |
| | ZIP FAST-RIDER | 50 | 93 | 95 | C16AD | - | |
| | ZIP SP LC | 50 | 96 | 99 | CE003 | - | |
| | ZIP CATALIZADA | 50 | 00 | | CE003 | - | |
| | ZIP 4T | 50 | 00 | | CE003 | - | |
| **POLARIS 4 Wheels** | | | | | | | |
| | OUTLAW 450 S | 450 | 08 | | C683 | | |
| | OUTLAW 525 IRS | 525 | 08 | | C624 | C624R | |
| | RANGER 900 RZR XP | 900 | 12 | | C779 | | |
| **SHERCO** | | | | | | | |

**C***R:** rear · trasero | **C***CL:** clutch · embrague | **C***C:** full Front & Rear · completo Delantero y Trasero

| AVAILABLE FINISHES • ACABADOS DISPONIBLES<br>FINITURE DISPONIBILI • FINIS DISPONIBLES | |
|---|---|
| Tube • Tubo • *Tubo* • Tube | Banjos • Banjos • *Banjo* • Banjos |
| Transparent • Transparente<br>*Trasparente* • Transparent | Silver brass • Latón plata<br>*Ottone silver* • Laiton argenté |
| Black • Negro<br>*Nero* • Noir | |
| Carbon • Carbono<br>*Carbono* • Carbono | |

| REFERENCES DESCRIPTION • DESCRIPCIÓN REFERENCIAS<br>DESCRIZIONE REFERENZA • DESCRIPTION RÉFÉRENCE | |
|---|---|
| C___R | *rear* • trasero • *posteriore • arrière* |
| C___3 | *3 lines* • 3 tubos • *3 tubi • 3 durit* |
| C___E | *clutch* • embrague • *frizione • embrayage* |
| C___G | *GP • GP • GP • GP* |
| C___C | *F&R full* • completo F&R • *completo F&R • complete F&R* |
| INCL | *included* • incluido • *incluso • inclus* |

| BRAND MARCA | MODEL MODELO | | C.C. | YEAR | FRONT | REAR | CLUTCH |
|---|---|---|---|---|---|---|---|
| ST 1.25 | 125 | 06 | 12 | CE016 | | | |
| ST 2.0 | 200 | 06 | | CE016 | | | |
| ST 2.5 | 250 | 06 | 12 | CE016 | | | |
| ST 2.9 | 290 | 06 | 11 | CE016 | | | |
| **SUZUKI** | | | | | | | |
| RM 80 | 80 | 96 | 02 | C234 | C234R | | |
| RM 85 / L | 85 | 03 | 04 | C331 | C331R | | |
| RM 85 / L | 85 | 05 | | C479 | C479R | | |
| DR-Z 125 L | 125 | 03 | | C345 | - | | |
| RM 125 | 125 | 89 | 95 | C073 | C073R | | |
| RM 125 | 125 | 96 | 98 | C126 | C126R | | |
| RM 125 | 125 | 99 | 03 | C126 | C126R | | |
| RM 125 | 125 | 04 | 05 | C429 | C429R | | |
| RM 125 | 125 | 06 | | C429 | C429R | | |
| DR 200 | 200 | 86 | 88 | C158 | - | | |
| DR 200 K | 200 | 89 | | C158 | - | | |
| DR 250 S | 250 | 90 | 00 | C079 | C079R | | |
| DR-Z 250 E | 250 | 01 | | C301 | C301R | | |
| GZ 250 MARAUDER | 250 | 08 | | C711 | - | | |
| RM 250 | 250 | 93 | 95 | C073 | C073R | | |
| RM 250 | 250 | 96 | 98 | C126 | C126R | | |
| RM 250 | 250 | 99 | 03 | C126 | C126R | | |
| RM 250 | 250 | 04 | 05 | C430 | C430R | | |
| RM 250 | 250 | 06 | | C429 | C429R | | |
| RM 250 Z | 250 | 04 | 06 | C412 | C412R | | |
| RM 250 Z | 250 | 07 | 12 | C412 | C412R | | |
| RM 250 Z | 250 | 13 | | CE050 | CE050R | | |
| RMX 250 | 250 | 95 | | C174 | C174R | | |
| DR 350 SE | 350 | 94 | | C079 | C079R | | |
| DR-Z 400 E | 400 | 00 | | C264 | C264R | | |
| DR-Z 400 S | 400 | 00 | | C291 | C264R | | |
| DR-Z 400 S SUPER MOTARD | 400 | 05 | | C539 | C539R | | |
| SFV 400 GLADIUS LEFT/IZQ | 400 | 10 | | C712 | | | |
| SFV 400 GLADIUS RIGHT/DER | 400 | 10 | | C712 | C712R | | |
| RM 450 Z | 450 | 05 | | C477 | C412R | | |
| RMX 450 Z | 450 | 10 | | C477 | C412R | | |
| GS 500 E | 500 | 89 | 95 | C117 | C117R | | |
| GS 500 E | 500 | 96 | | C454 | C454R | | |
| GS 500 F | 500 | 06 | | C559 | C559R | | |
| GSF 600 N BANDIT | 600 | 95 | 99 | C075 | C075R | | |
| GSF 600 N BANDIT DER. | 600 | 00 | | C300 | | | |
| GSF 600 N BANDIT IZQ. | 600 | 00 | | C300 | C300R | | |
| GSR 600 | 600 | 06 | | C682 | C682R | | |
| GSX 600 F | 600 | 89 | 90 | C191 | C191R | | |
| GSX 600 F | 600 | 91 | 97 | C191 | C191R | | |
| GSX 600 F DER. (KATANA 600 USA) | 600 | 98 | 03 | C194 | | | |
| GSX 600 F IZQ. (KATANA 600 USA) | 600 | 98 | 03 | C194 | C194R | | |
| GSX 600 F DER. (KATANA 600 USA) | 600 | 04 | | C455 | | | |
| GSX 600 F IZQ. (KATANA 600 USA) | 600 | 04 | | C455 | C455R | | |
| GSX 600 R | 600 | 92 | 96 | C080 | C080R | | |
| GSX R 600 SRAD | 600 | 97 | 03 | C014 | C014R | | |
| GSX R 600 SRAD | 600 | 04 | 05 | C419 | C419R | | |
| GSX R 600 | 600 | 06 | 07 | C419 | C497R | | |
| GSX R 600 | 600 | 08 | 10 | C656 | C497R | | |
| GSX R 600 | 600 | 11 | | C765 | C765R | | |
| RF 600 R | 600 | 93 | | C077 | C077R | | |
| DL 650 V-STORM DER. | 650 | 04 | 06 | C327 | | | |
| DL 650 V-STORM IZQ. | 650 | 04 | 06 | C327 | C327R | | |
| DL 650 V-STORM DER. | 650 | 07 | | C327 | | | |
| DL 650 V-STORM IZQ. | 650 | 07 | | C327 | C327R | | |

| BRAND MARCA | MODEL MODELO | | C.C. | YEAR | FRONT | REAR | CLUTCH |
|---|---|---|---|---|---|---|---|
| DL 650 V-STORM DER./ABS | 650 | 07 | | C733C | INCL | | |
| DL 650 V-STORM IZQ./ABS | 650 | 07 | | C733C | INCL | | |
| DL 650 V-STORM XPEDITION DER. | 650 | 11 | | C327 | | | |
| DL 650 V-STORM XPEDITION IZQ. | 650 | 11 | | C327 | C327R | | |
| DL 650 V-STORM XPEDITION DER./ABS | 650 | 11 | 12 | C733C | INCL | | |
| DL 650 V-STORM XPEDITION IZQ./ABS | 650 | 11 | 12 | C733C | INCL | | |
| DR 650 | 650 | 96 | | C217 | C217R | | |
| GSF 650 BANDIT /S/ | 650 | 07 | | C681 | C681R | | |
| GSX 650 F | 650 | 08 | | C643 | C643R | | |
| LS 650 SAVAGE | 650 | 87 | 87 | C091 | - | | |
| LS 650 | 650 | 88 | 89 | C091 | - | | |
| LS 650 SAVAGE | 650 | 90 | 91 | C091 | - | | |
| LS 650 P | 650 | 92 | 04 | C091 | - | | |
| LS 650 (S40 BOULEVAR USA) | 650 | 05 | 08 | C490 | - | | |
| LS 650 (S40 BOULEVAR USA) | 650 | 09 | | C710 | - | | |
| SFV 650 GLADIUS LEFT/IZQ | 650 | 09 | | C712 | | | |
| SFV 650 GLADIUS RIGHT/DER | 650 | 09 | | C712 | C712R | | |
| SV 650 /S DER. | 650 | 99 | 02 | C224 | | | |
| SV 650 /S IZQ. | 650 | 99 | 02 | C224 | C224R | | |
| SV 650 /S DER. | 650 | 03 | 03 | C385 | | | |
| SV 650 /S IZQ. | 650 | 03 | 03 | C385 | C385R | | |
| SV 650 /S DER. | 650 | 04 | 06 | C453 | | | |
| SV 650 /S IZQ. | 650 | 04 | 06 | C453 | C453R | | |
| SV 650 ABS DER. | 650 | 07 | | C754C | INCL | | |
| SV 650 ABS IZQ. | 650 | 07 | | C754C | INCL | | |
| GS 750 ED, ESD, ET, LT, FX, LX, T, X | 750 | 80 | | C074 | | | |
| GSR 750 LEFT/IZQ | 750 | 11 | | CE047 | | | |
| GSR 750 RIGHT/DER | 750 | 11 | | CE047 | CE047R | | |
| GSX 750 F VS DER. (KATANA 750 USA) | 750 | 99 | 02 | C192 | | | |
| GSX 750 F VS IZQ. (KATANA 750 USA) | 750 | 99 | 02 | C192 | C192R | | |
| GSX 750 R / Limited | 750 | 85 | 87 | C133 | C133R | C133E | |
| GSX R 750 | 750 | 88 | 90 | C012 | C012R | C012E | |
| GSX R 750 W | 750 | 94 | 95 | C013 | C013R | | |
| GSX R 750 SRAD | 750 | 96 | 99 | C013 | C013R | | |
| GSX R 750 SRAD | 750 | 00 | 03 | C013 | C013R | | |
| GSX R 750 SRAD | 750 | 04 | 05 | C419 | C419R | | |
| GSX R 750 | 750 | 06 | 07 | C419 | C497R | | |
| GSX R 750 | 750 | 08 | 10 | C656 | C497R | | |
| GSX R 750 | 750 | 11 | | C765 | C765R | | |
| BOULEVARD 800 | 800 | 05 | | C577 | - | | |
| VL 800 VOLUSIA | 800 | 01 | | C322 | - | | |
| VS 800 GL, N, INTRUDER | 800 | 93 | 99 | C035 | - | C036E | |
| VS INTRUDER M 800 | 800 | 05 | | CE018 | - | C286E | |
| VX 800 | 800 | 90 | | C759 | C759R | | |
| RF 900 R | 900 | 94 | 95 | C078 | C078R | C078E | |
| RF 900 RS2 | 900 | 96 | | C078 | C078R | C078E | |
| DL 1000 V-STORM DER. | 1000 | 01 | 13 | C327 | | | |
| DL 1000 V-STORM IZQ. | 1000 | 01 | 13 | C327 | C327R | C327E | |
| DL 1000 V-STORM ABS | 1000 | 14 | | C806C | INCL | | |
| GSX R 1000 | 1000 | 01 | 02 | C283 | C283R | | |
| GSX R 1000 | 1000 | 03 | 03 | C366 | C366R | | |
| GSX R 1000 | 1000 | 04 | 04 | C366 | C366R | | |
| GSX R 1000 | 1000 | 05 | 06 | C419 | C452R | | |
| GSX R 1000 | 1000 | 07 | 08 | C419 | C573R | | |
| GSX R 1000 | 1000 | 09 | 11 | C700 | C700R | | |
| GSX R 1000 | 1000 | 12 | | C773 | C700R | | |
| SV 1000 | 1000 | 03 | | C439 | C439R | C439E | |
| SV 1000 / S / SZ | 1000 | 03 | | C443 | C443R | C443E | |
| TL 1000 R | 1000 | 98 | | C189 | C189R | C189E | |
| TL 1000 S | 1000 | 97 | | C116 | C116R | | |

**C***R:** rear · trasero | **C***CL:** clutch · embrague | **C***C:** full Front & Rear · completo Delantero y Trasero

**AVAILABLE FINISHES • ACABADOS DISPONIBLES**
**FINITURE DISPONIBILI • FINIS DISPONIBLES**

| | |
|---|---|
| Tube • Tubo • *Tubo* • Tube | Banjos • Banjos • *Banjo* • Banjos |
| Transparent • Transparente<br>*Trasparente* • Transparent | Silver brass • Latón plata<br>*Ottone silver* • Laiton argenté |
| Black • Negro<br>*Nero* • Noir | |
| Carbon • Carbono<br>*Carbono* • Carbono | |

**REFERENCES DESCRIPTION • DESCRIPCIÓN REFERENCIAS**
**DESCRIZIONE REFERENZA • DESCRIPTION RÉFÉRENCE**

| | |
|---|---|
| C___R | *rear* • trasero • *posteriore • arrière* |
| C___3 | *3 lines* • 3 tubos • *3 tubi • 3 durit* |
| C___E | *clutch* • embrague • *frizione • embrayage* |
| C___G | GP • *GP • GP • GP* |
| C___C | *F&R full* • completo F&R • *completo F&R • complete F&R* |
| INCL | *included* • incluido • *incluso • inclus* |

| BRAND & MODEL<br>MARCA Y MODELO | C.C. | YEAR | | FRONT | REAR | CLUTCH |
|---|---|---|---|---|---|---|
| GS 1100 ET, ST, T, LT | 1100 | 80 | | C375 | C375R | |
| GSX 1100 G | 1100 | 90 | 92 | C212 | C212R | |
| GSX 1100 KATANA | 1100 | 82 | 88 | C231 | | |
| GSX 1100 R | 1100 | 86 | 88 | C133 | C133R | C133E |
| GSX R 1100, L, LM | 1100 | 89 | 92 | C012 | C012R | C012E |
| GSX R 1100 W | 1100 | 93 | | C392 | C392R | C392E |
| GS 1150 EG | 1150 | 87 | | C340 | C340R | |
| GSF 1200 BANDIT | 1200 | 95 | 99 | C121 | C121R | C121E |
| GSF 1200 BANDIT / S | 1200 | 00 | 05 | C280 | C280R | C280E |
| GSF 1200 BANDIT / S | 1200 | 06 | | C634 | C594R | C594E |
| GSF 1200 BANDIT ABS | 1200 | 06 | | C666C | INCL | INCL |
| GSF 1250 BANDIT A/S/SA | 1250 | 07 | 08 | C634 | C594R | C594E |
| B-KING | 1300 | 07 | | C628 | C628R | C628E |
| GSX 1300 R HAYABUSA | 1300 | 99 | 07 | C223 | C223R | C223E |
| GSX 1300 R HAYABUSA | 1300 | 08 | 13 | C623 | C623R | C223E |
| GV 1400 CAVALCADE | 1400 | 87 | | C241 | C241R | C241E |
| VS 1400 INTRUDER | 1400 | 87 | 91 | C037 | C037R | C037E |
| VS 1400 (S83 USA) | 1400 | 04 | | C492 | C492R | C492E |
| VL 1500 INTRUDER LEGENDARY EASSIC | 1500 | 98 | 99 | C270 | C270R | C270E |
| VL 1500 INTRUDER LEGENDARY CLASSIC | 1500 | 00 | 01 | C270 | C270R | C270E |
| VL 1500 INTRUDER LEFT/IZQ | 1500 | 02 | | C441 | | |
| VL 1500 INTRUDER RIGHT/DER | 1500 | 02 | | C441 | C441R | |
| VZ 1600 | 1600 | 04 | | C436 | C436R | C436E |
| M 109 R BOULEVARD | 1800 | 06 | | C514 | C514R | |
| M 1800 RB | 1800 | 14 | | C798 | C514R | |
| **SUZUKI 4 Wheels** | | | | | | |
| LT 250 F OZARK | 250 | 02 | | C358 | - | |
| LT 250 RF/RG/RH | 250 | 85 | 87 | C076 | C076R | |
| LT 250 RJ/RK/RL/RM/RN | 250 | 88 | 92 | C076 | C076R | |
| LT Z-250 K4 QUAD SPORT | 250 | 04 | | C358 | - | |
| LT Z 400 | 400 | 03 | | C308 | C308R | |
| LT R 450 RIGHT/DER. | 450 | 06 | | C498 | C498R | |
| LT 500 RH,RJ,RK,RL,RM,RN | 500 | 91 | 93 | C387 | | |
| **SYM** | | | | | | |
| SYMPHONY 125 | 125 | 09 | | CE027 | - | |
| SYMPHONY 125 S | 125 | 10 | | CE027 | | |
| SYMPHONY 125 SR | 125 | 10 | | CE027 | | |
| **TRIUMPH** | | | | | | |
| TT 600 | 600 | 00 | | C226 | C226R | |
| DAYTONA TRIPLE | 675 | 06 | 08 | C675 | C675R | |
| BONNEVILLE AMERICA | 750 | 02 | | C329 | | |
| BONNEVILLE /T100 | 800 | 04 | 05 | C329 | C329R | |
| BONNEVILLE /T100 | 850 | 05 | 07 | C329 | C329R | |
| BONNEVILLE EFI /T100 | 800 | 08 | | C329 | C329R | |
| DAYTONA 900 | 900 | 93 | 96 | C207 | C207R | |
| DAYTONA 900 T-595 | 900 | 97 | | C207 | C207R | |
| LEGEND TT | 900 | 99 | | C351 | C351R | |
| THUNDERBIRD 900/SPORT | 900 | 95 | | C179 | C179R | |
| TIGER 900 (left) | 900 | 93 | 98 | C149 | | |
| TIGER 900 (right) | 900 | 93 | 98 | C149 | | C149E |
| TRIDENT 900 (left) | 900 | 93 | | C268 | | |
| TRIDENT 900 (right) | 900 | 93 | | C268 | C268R | C268E |
| SPEED TRIPLE 955 i | 955 | 99 | 01 | C321 | C321R | |
| SPRINT RS | 955 | 00 | | C307 | | |
| SPRINT ST 955 | 955 | 99 | | C307 | | |
| SPEED TRIPLE T-509 | 995 | 99 | | C389 | | |
| TIGER 955 | 955 | 99 | | C350 | C350R | |
| SPRINT ST 1050 | 1050 | 06 | | C676 | C676R | |
| TROPHY 1200 | 1200 | 94 | | C143 | C143R | C143E |
| ROCKET III | 2300 | 04 | | C671 | C671R | |

| BRAND<br>MARCA | MODEL<br>MODELO | C.C. | YEAR | | FRONT | REAR | CLUTCH |
|---|---|---|---|---|---|---|---|
| ROCKET III ROADSTER | 2300 | 10 | | C671 | C671R | | |
| **VICTORY** | | | | | | | |
| HAMMER / S | 1500 | 01 | 07 | C547 | C546R | | |
| KING PIN | 1500 | 08 | | C546 | C546R | | |
| VEGAS | 1500 | 03 | 07 | C546 | C546R | | |
| **YAMAHA** | | | | | | | |
| AEROX 50 | 50 | 97 | | CE001 | CE001R | | |
| AEROX 50 NAKED | 50 | 13 | | CE001 | CE001R | | |
| BW'S SPY 50 | 50 | 95 | 95 | CE006 | - | | |
| BW'S 50 R | 50 | 95 | 95 | CE006 | - | | |
| BW'S BUMP | 50 | 96 | | CE006 | - | | |
| BW'S NEXT GENERATION 50 | 50 | 96 | | CE006 | - | | |
| BW'S NAKED | 50 | 06 | | CE006 | - | | |
| BW'S WHEEL12" | 50 | 06 | | CE006 | - | | |
| TZR 50 RR | 50 | 03 | | CE035 | | | |
| YSR 50, T | 50 | 86 | | C084 | - | | |
| YZ 80 | 80 | 93 | 02 | C276 | C276R | | |
| YZ 85 / LW | 85 | 03 | | C347 | C347R | | |
| TT R 125 | 125 | 00 | | C325 | - | | |
| X - MAX 125 | 125 | 06 | 09 | CE033 | CE033R | | |
| YZ 125 | 125 | 85 | 87 | C402 | - | | |
| YZ 125 | 125 | 88 | 88 | C402 | | | |
| YZ 125 | 125 | 08 | | C344 | C413R | | |
| YZ 125, WR | 125 | 90 | 91 | C083 | C083R | | |
| YZ 125, WR | 125 | 92 | 97 | C120 | C120R | | |
| YZ 125, WR | 125 | 98 | 00 | C344 | C344R | | |
| YZ 125, WR | 125 | 01 | 02 | C344 | C344R | | |
| YZ 125, WR | 125 | 03 | 03 | C344 | C346R | | |
| YZ 125, WR | 125 | 04 | 07 | C344 | C413R | | |
| YZF 125 R | 125 | 08 | | CE012 | CE012R | | |
| CRYPTON-X T 135 | 135 | 08 | 14 | CE055 | - | | |
| DT 200 R | 200 | 88 | | C328 | | | |
| TW 200 | 200 | 98 | | C731 | - | | |
| TT 225 R | 225 | 00 | | C272 | - | | |
| XT 225 | 225 | 92 | 00 | C614 | - | | |
| XT 225 | 225 | 01 | | C737 | - | | |
| WR 250 F 4T | 250 | 03 | 06 | C198 | C413R | | |
| WR 250 F 4T | 250 | 07 | | C198 | C413R | | |
| WR 250 X | 250 | 08 | | C697 | C413R | | |
| X - MAX 250 | 250 | 05 | 09 | CE033 | CE032R | | |
| XT 250 X | 250 | 06 | | C648 | C648R | | |
| XV 250 VIRAGO | 250 | 89 | 90 | C040 | - | | |
| XV 250 VIRAGO | 250 | 91 | 92 | C040 | - | | |
| XV 250 VIRAGO | 250 | 93 | 95 | C040 | - | | |
| XVS 250 DRAG STAR | 250 | 01 | | C706 | - | | |
| YZ 250 | 250 | 08 | | C344 | C413R | | |
| YZ 250, W, RALLY | 250 | 90 | 91 | C083 | C083R | | |
| YZ 250, WR | 250 | 92 | 98 | C120 | C120R | | |
| YZ 250, WR | 250 | 99 | 00 | C344 | C182R | | |
| YZ 250 F, WR F 4T | 250 | 00 | 00 | C344 | C182R | | |
| YZ 250, WR | 250 | 01 | 02 | C344 | C182R | | |
| YZ 250 F, WR F 4T | 250 | 01 | 02 | C344 | C182R | | |
| YZ 250 F | 250 | 03 | 06 | C344 | C346R | | |
| YZ 250 F, WR F 4T | 250 | 03 | 06 | C344 | C346R | | |
| YZ 250 F | 250 | 07 | 08 | C627 | C627R | | |
| YZ 250 F | 250 | 09 | | CE010 | CE010R | | |
| RD 350 LC, F | 350 | 85 | 90 | C193 | C193R | | |
| FZR 400 RR | 400 | 90 | | C081 | C081R | | |
| RD 400 S | 400 | 73 | 76 | C211 | - | | |
| WR 400 F | 400 | 98 | 98 | C344 | C198R | | |

**C***R:** rear · trasero | **C***CL:** clutch · embrague | **C***C:** full Front & Rear · completo Delantero y Trasero

| AVAILABLE FINISHES • ACABADOS DISPONIBLES<br>FINITURE DISPONIBILI • FINIS DISPONIBLES | |
|---|---|
| Tube • Tubo • *Tubo* • Tube | Banjos • Banjos • *Banjo* • Banjos |
| Transparent • Transparente<br>*Trasparente* • Transparent | Silver brass • Latón plata<br>*Ottone silver* • Laiton argenté |
| Black • Negro<br>*Nero* • Noir | |
| Carbon • Carbono<br>*Carbono* • Carbono | |

| REFERENCES DESCRIPTION • DESCRIPCIÓN REFERENCIAS<br>DESCRIZIONE REFERENZA • DESCRIPTION RÉFÉRENCE | |
|---|---|
| C___R | *rear* • trasero • *posteriore* • *arrière* |
| C___3 | *3 lines* • 3 tubos • *3 tubi* • *3 durit* |
| C___E | *clutch* • embrague • *frizione* • *embrayage* |
| C___G | GP • *GP* • *GP* • *GP* |
| C___C | *F&R full* • completo F&R • *completo F&R* • *complete F&R* |
| INCL | *included* • incluido • *incluso* • *inclus* |

| BRAND MARCA | MODEL MODELO | | C.C. | YEAR | FRONT | REAR | CLUTCH |
|---|---|---|---|---|---|---|---|
| WR 400 F | 400 | 99 | 99 | C344 | C198R | | |
| YZ 400 F | 400 | 98 | 98 | C344 | C198R | | |
| YZ 400 F | 400 | 99 | 99 | C344 | C198R | | |
| WR 426 F | 425 | 00 | 01 | C344 | C198R | | |
| WR 426 F | 425 | 02 | 02 | C344 | C198R | | |
| YZ 426 F | 425 | 00 | 01 | C344 | C198R | | |
| YZ 426 F | 425 | 02 | 02 | C344 | C198R | | |
| WR 450 F | 450 | 03 | 11 | C198 | C413R | | |
| YZ 450 F | 450 | 03 | 07 | C344 | C344R | | |
| YZ 450 F | 450 | 08 | 11 | C622 | C622R | | |
| YZ 450 F | 450 | 12 | | C622 | C622R | | |
| YZ 490 RALLY | 490 | 90 | | C083 | C083R | | |
| XP 500 T-MAX | 500 | 00 | 03 | CE046 | CE046R | | |
| XP 500 T-MAX | 500 | 04 | 07 | CE013 | CE013R | | |
| XP 500 T-MAX | 500 | 08 | | C658 | C658R | | |
| XP 500 T-MAX ABS | 500 | 08 | | M658 | M658R | | |
| XP 500 T-MAX BLACK MAX | 500 | 06 | 07 | CE013 | CE013R | | |
| XP 530 T-MAX | 530 | 12 | | CE030 | CE030R | | |
| XP 530 T-MAX ABS | 530 | 12 | | CE038 | CE038R | | |
| XV 535 VIRAGO | 535 | 87 | 94 | C107 | - | | |
| FZ 6 FAZER | 600 | 04 | 06 | C431 | C431R | | |
| FZ 6 S FAZER | 600 | 04 | 06 | C431 | C431R | | |
| FZ 6 /S FAZER ABS | 600 | 06 | 06 | CE014 | | | |
| FZ 6 S2 | 600 | 07 | | C585 | C585R | | |
| FZ 6 FAZER S2 | 600 | 07 | | C585 | C585R | | |
| FZ 6 S2 ABS | 600 | 07 | | C640 | C640R | | |
| FZ 6 FAZER S2 ABS | 600 | 07 | | C640 | C640R | | |
| FZR 600 | 600 | 90 | 95 | C018 | C018R | | |
| SRX 600 | 600 | 85 | 86 | C112 | C112R | | |
| XJ 6 S DIVERSION (FZ 6 R USA) | 600 | 09 | | C704 | C704R | | |
| XJ 6 S DIVERSION ABS | 600 | 09 | | CE029 | | | |
| XJ 6 S DIVERSION NAKED | 600 | 09 | | C704 | C704R | | |
| XJ 600 SECA II | 600 | 92 | 93 | C086 | C086R | | |
| XT 600 | 600 | 87 | 88 | C213 | | | |
| YZF 600 THUNDER CAT | 600 | 96 | 00 | C042 | C042R | | |
| YZF 600 R-6 | 600 | 99 | 02 | C214 | C214R | | |
| YZF 600 R-6 | 600 | 03 | 04 | C373 | C373R | | |
| YZF 600 R-6 | 600 | 05 | 05 | C462 | C462R | | |
| YZF 600 R-6 | 600 | 06 | 07 | C512 | C512R | | |
| YZF 600 R-6 | 600 | 08 | | C512 | C512R | | |
| YZF 600 R-46 | 600 | 05 | | C462 | C462R | | |
| XJ 650 SECA, TURBO | 650 | 81 | 81 | C406 | - | | |
| XVS 650 STAR CLASSIC | 650 | 97 | | C157 | - | | |
| XV 700 L, LC | 700 | 84 | | C318 | - | | |
| XV 750 VIRAGO | 750 | 88 | 92 | C039 | - | | |
| YZF 750 R, SP | 750 | 93 | 95 | C020 | C020R | C020E | |
| FAZER 8 | 800 | 10 | | CE024 | CE024R | | |
| FZ 8 | 800 | 10 | | CE024 | CE024R | | |
| MT 09 | 850 | 13 | | CE051 | CE051R | | |
| MT 09 STREET RALLY | 850 | 14 | | CE051 | CE051R | | |
| TDM 850 | 850 | 90 | 01 | C082 | C082R | | |
| XS 850 G, H, LG, SG | 850 | 80 | 80 | C210 | | | |
| XS 850 LG, LH, SH (left) | 850 | 81 | | C210 | | | |
| XS 850 LG, LH, SH (right) | 850 | 81 | | C210 | | | |
| XJ 900 F | 900 | 83 | 90 | C254C | INCL | | |
| XVS 950 A MIDNIGHT STAR | 950 | 09 | | C705 | C705R | | |
| FZ 1 (USA) | 1000 | 98 | 05 | C281 | C281R | | |
| FZ 1 / FAZER | 1000 | 06 | | C537 | C537R | | |
| FZR 1000 EXUP | 1000 | 93 | 95 | C022 | C022R | | |
| FZS 1000 FAZER | 1000 | 98 | 05 | C281 | C281R | | |

| BRAND MARCA | MODEL MODELO | | C.C. | YEAR | FRONT | REAR | CLUTCH |
|---|---|---|---|---|---|---|---|
| GTS 1000 OMEGA | 1000 | 93 | | C088 | C088R | C088E | |
| YZF 1.000 THUNDER ACE | 1000 | 96 | 98 | C021 | C021R | C021E | |
| YZF 1.000 R-1 | 1000 | 98 | 01 | C190 | C190R | | |
| YZF 1.000 R-1 | 1000 | 02 | 03 | C190 | C309R | | |
| YZF 1.000 R-1 | 1000 | 04 | 05 | C417 | C417R | | |
| YZF 1.000 R-1 | 1000 | 06 | 06 | C417 | C508R | | |
| YZF 1.000 R-1 SP | 1000 | 06 | 06 | C417 | C508R | | |
| YZF 1.000 R-1 | 1000 | 07 | 08 | C576 | C576R | | |
| YZF 1.000 R-1 | 1000 | 09 | 11 | C703 | C703R | | |
| YZF 1.000 R-1 TCS | 1000 | 12 | | C703 | C703R | | |
| 1100 MAXIM | 1100 | 81 | | C602C | INCL | | |
| FJ 1100 | 1100 | 84 | 86 | C687 | | | |
| XS 1100 E, F, G, H | 1100 | 79 | 79 | C156 | | | |
| XV 1100 S/SC, VIRAGO | 1100 | 86 | 92 | C039 | - | | |
| XV 1100 VIRAGO | 1100 | 95 | 98 | C039 | - | | |
| XVS 1100 DRAG STAR | 1100 | 99 | | C660 | | | |
| FJ 1200 | 1200 | 88 | | C232 | C089R | C089E | |
| V MAX 1200 VMX | 1200 | 85 | 92 | C090 | C090R | C090E | |
| V MAX 1200 VMX | 1200 | 93 | 94 | C090 | C090R | C090E | |
| V MAX 1200 VMX | 1200 | 95 | 02 | C090 | C090R | C090E | |
| V MAX 1200 XMS | 1200 | 03 | | C090 | C090R | C090E | |
| XTZ 1200 SUPER TENERE ABS | 1200 | 10 | | CE017 | CE017R | | |
| XTZ 1200 ZE SUPER TENERE ABS | 1200 | 14 | | CE017 | CE017R | | |
| FJR 1300 | 1300 | 03 | 05 | C336 | C336R | C336E | |
| FJR 1300 ABS | 1300 | 06 | 07 | C605C | INCL | INCL | |
| FJR 1300 ABS | 1300 | 08 | | C701C | INCL | INCL | |
| VENTURE ROYALE 1300 | 1300 | 90 | | C244C | INCL | | |
| XJR 1300 | 1300 | 01 | | CE037 | CE037R | | |
| XVS MIDNIGHT STAR 1300 | 1300 | 07 | | C579 | C579R | | |
| XZV 1.300 ROYAL STAR | 1300 | 96 | 98 | C093 | C093R | C093E | |
| XZV 1.300 TF ROYAL STAR VENTURE | 1300 | 99 | | C494 | C494R | C494E | |
| XV 1600 WILD STAR | 1600 | 99 | | C258 | C258R | | |
| V MAX 1700 | 1700 | 09 | | C694C | INCL | INCL | |
| XV 1700 ROAD STAR WARRIOR | 1700 | 02 | 07 | C311 | C311R | | |
| XV 1700 ROAD STAR WARRIOR | 1700 | 08 | | C689 | C311R | | |
| XV STAR RAIDER | 1900 | 08 | | C652 | C652R | | |
| XV 1900 STRATOLINER | 1900 | 06 | | C529 | C529R | C529E | |
| XVS 1900 MIDNIGHT STAR | 1900 | 06 | 12 | C529 | C529R | C529E | |
| **YAMAHA 4 Wheels** | | | | | | | |
| YTZ 250 N/S | 250 | 85 | 86 | C374 | C374R | | |
| YFS 200 R BLASTER | 200 | 03 | | C343 | C343R | | |
| YFM 250 R RAPTOR DER/RIGHT | 250 | 08 | | C690 | C690R | | |
| YFM 350 R RAPTOR | 350 | 04 | | C574 | C574R | | |
| YFM 350 WARRIOR | 350 | 89 | | C109 | C109R | | |
| YFM 350 WOLVERINE | 350 | 95 | | C360 | C360R | | |
| YFZ 350 A,B,D,E BANSHEE | 350 | 90 | 06 | C145 | C145R | | |
| YFM 450 | 450 | 03 | | C398 | | | |
| YFZ 450 R DER/RIGHT | 450 | 09 | | C725 | C725R | | |
| YFZ 450 S IZQ. | 450 | 03 | 05 | C398 | C398R | | |
| YFZ 450 S IZQ. | 450 | 06 | | C398 | C528R | | |
| YFM 660 GRIZZLY | 660 | 02 | | C356 | | | |
| YFM 660 R RAPTOR | 660 | 01 | | C275 | C275R | | |
| YXR 660 RHINO 4X4 DER./RIGHT | 660 | 04 | | C531 | | | |
| YFM 700 R RAPTOR DER./RIGHT | 700 | 06 | 12 | C275 | C275R | | |

**C***R:** rear · trasero | **C***CL:** clutch · embrague | **C***C:** full Front & Rear · completo Delantero y Trasero

GALFER FK 0130 ← 1

2 →

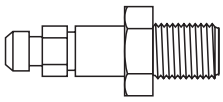

3 → *BLEED NIPPLES* • TORNILLO SANGRADOR
*VITE DI SPURGO • VIS DE PURGE*

4 →

| *THREAD* • PASO ROSCA<br>*FILETTO • FILL* | SILVER BRASS • LATÓN PLATA<br>*OTTONE ARGENTO • LAITON ARGENT* |
|---|---|
| 10 mm | FK003D0130 |
| 12 mm | FK013D0131 |
| | |
| | |
| | |
| | |
| | |
| | |
| | |

## DESCRIPTION • DESCRIPCIÓN • DESCRIZIONE • DESCRIPTION

**1**
**Reference base of the piece**
**Referencia base de la pieza**
**Riferimento base del pezzo**
**Référence base de la pièce**

**2**
**Piece drawing 1:1 scale**
**Dibujo pieza a escala 1:1**
**Illustrazione pezzo scala 1:1**
**Schéme pièce echelle 1:1**

**3**
**Piece description**
**Descripción de la pieza**
**Descrizione del pezzo**
**Description de la pièce**

**4**
**Options and complete reference of the piece**
**Opciones y referencia completa de la pieza**
**Opzioni e riferimento completa del pezzo**
**Options et référence complète de la pièce**

GALFER FK

| REF. | COLOUR |
|---|---|
| *D0011 | *Black* Negro *Nero* *Noir* |
| *D0012 | *Transparent* Transparente *Transparente* *Transparent* |
| *D0031 | *Carbon* Carbono *Carbonio* *Carbon* |

| REF. | SIZE |
|---|---|
| FK015* | 15 cm |
| FK025* | 25 cm |
| FK030* | 30 cm |
| FK035* | 35 cm |
| FK040* | 40 cm |
| FK045* | 45 cm |
| FK050* | 50 cm |
| FK055* | 55 cm |
| FK060* | 60 cm |
| FK065* | 65 cm |
| FK070* | 70 cm |
| FK075* | 75 cm |
| FK080* | 80 cm |
| FK085* | 85 cm |
| FK090* | 90 cm |
| FK095* | 95 cm |
| FK100* | 100 cm |
| FK105* | 105 cm |
| FK110* | 110 cm |
| FK120* | 120 cm |
| FK130* | 130 cm |
| FK140* | 140 cm |
| FK150* | 150 cm |

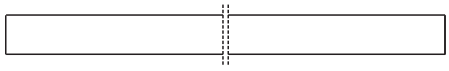

*HOSES* • TUBERÍA
*TUBI FRENO* • *DURITES*

GALFER FK 051A

| THREAD · *PASO ROSCA* *FILETTO • FILL* | SILVER BRASS · LATÓN PLATA *OTTONE ARGENTO · LAITON ARGENT* |
|---|---|
| M. 10 x 1.00 | FK003D051A |
| M. 10 x 1.25 | FK003D051B |
| 3/8 (24h UNEF) | FK003D051C |
| 1/8 (28h GAS) | FK003D051D |

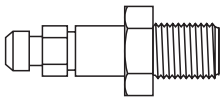

*BLEED NIPPLES* • TORNILLO SANGRADOR
*VITE DI SPURGO* • *VIS DE PURGE*

GALFER FK 008A

| THREAD · *PASO ROSCA* *FILETTO • FILL* | SILVER BRASS · LATÓN PLATA *OTTONE ARGENTO · LAITON ARGENT* |
|---|---|
| M.10 x 1.00 | FK003D008A |
| M.10 x 1.25 | FK003D008B |
| 3/8 (24h UNF) | FK003D008C |
| 1/8 (28h GAS) | FK003D008D |
| 7/16 (24h) | FK013D008F |

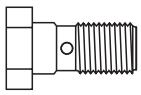

*BANJO BOLT* • TORNILLO BANJO
*BULLONE SEMPLICE RACCORDO* • *VIS BANJO*

GALFER FK 009A

| THREAD · *PASO ROSCA* *FILETTO • FILL* | SILVER BRASS · LATÓN PLATA *OTTONE ARGENTO · LAITON ARGENT* |
|---|---|
| M.10 x 1.00 | FK003D009A |
| M.10 x 1.25 | FK003D009B |
| 3/8 (24h UNF) | FK003D009C |
| 1/8 (28h GAS) | FK003D009D |
| 7/16 (24h) | FK013D009F |

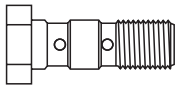

*DOUBLE BANJO BOLT* • TORNILLO BANJO DOBLE
*BULLONE DOPPIO RACCORDO* • *VIS BANJO DOUBLE*

GALFER FK 007A

| THREAD · *PASO ROSCA* *FILETTO • FILL* | SILVER BRASS · LATÓN PLATA *OTTONE ARGENTO · LAITON ARGENT* |
|---|---|
| A.1/8 (28h GAS) - B. M.10 x 1.00 | FK003D007A |
| A.1/8 (28h GAS) - B. M.10 x 1.25 | FK003D007B |
| A.1/8 (28h GAS) - B. 3/8 (24h UNE) | FK003D007C |

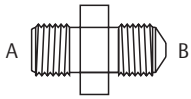


*CONCAVE ADAPTER* • ADAPTADOR CÓNCAVO
*ADATTATORE CONCAVO* • *ADAPTATEUR CONCAVE*

## GALFER FK 007D

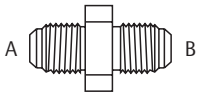


*CONVEX ADAPTER* • ADAPTADOR CONVEXO
*ADATTATORE CONVESSO • ADAPTATEUR CONVEXE*

| THREAD • *PASO ROSCA* *FILETTO • FILL* | SILVER BRASS • LATÓN PLATA *OTTONE ARGENTO • LAITON ARGENT* |
|---|---|
| A. M.10 x 1.00 - B. M.10 x 1.00 | FK003D007D |
| A. M.10 x 1.00 - B. M.10 x 1.25 | FK003D007E |
| A. M.10 x 1.00 - B. 3/8 (24h UNE) | FK003D007F |
| A.3/8 (24h UNE) - B. 3/8 (24h UNE) | FK003D007G |

## GALFER FK 024A

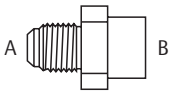


*ADAPTER* • ADAPTADOR
*ADATTATORE • ADAPTATEUR*

| THREAD • *PASO ROSCA* *FILETTO • FILL* | SILVER BRASS • LATÓN PLATA *OTTONE ARGENTO • LAITON ARGENT* |
|---|---|
| A/B M.10 x 1.00 | FK003D024A |
| A. M.10 x 1.00 - B. M.10 x 1.25 | FK003D024B |
| A. M.10 x 1.00 - B. 3/8 (24h UNF) | FK003D024C |
| A. M.10 x 1.25 - B. M.10 x 1.00 | FK003D024D |
| A/B M.10 x 1.25 | FK003D024E |
| A. M.10 x 1.25 - B. 3/8 (24h UNF) | FK003D024F |
| A. 3/8 (24h UNF) - B. M.10 x 1.00 | FK003D024G |
| A. 3/8 (24h UNF) - B. M.10 x 1.25 | FK003D024H |
| A/B 3/8 (24h UNF) | FK003D024i |

## GALFER FK 030A

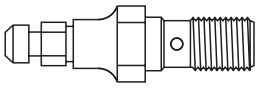

*BLEED BANJO* • BANJO SANGRADOR
*RACCORDO DI SPURGO • BANJO DE GRAISSAGE*

| THREAD • *PASO ROSCA* *FILETTO • FILL* | SILVER BRASS • LATÓN PLATA *OTTONE ARGENTO • LAITON ARGENT* |
|---|---|
| M.10 x 1.00 | FK003D030A |
| M.10 x 1.25 | FK003D030B |
| 3/8 (24h UNF) | FK003D030C |
| 1/8 (28h GAS) | FK003D030D |
| A. 3/8 (24h UNF) - B. M.10 x 1.25 | FK003D024H |
| A/B 3/8 (24h UNF) | FK003D024i |

## GALFER FK 031A

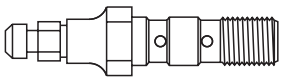

*DOUBLE BLEED BANJO* • BANJO SANGRADOR DOBLE
*RACCORDO DI SPURGO DOPPIO • BANJO DOUBLE DE GRAISSAGE*

| THREAD • *PASO ROSCA* *FILETTO • FILL* | SILVER BRASS • LATÓN PLATA *OTTONE ARGENTO • LAITON ARGENT* |
|---|---|
| M.10 x 1.00 | FK003D031A |
| M.10 x 1.25 | FK003D031B |
| 3/8 (24h UNF) | FK003D031C |
| 1/8 (28h GAS) | FK003D031D |

## GALFER FK 0430

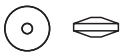

*CONIC INVERSOR* • INVERSOR CÓNICO
*INVERTITORE CONICO • INVERSEUR CONIQUE*

| THREAD • *PASO ROSCA* *FILETTO • FILL* | SILVER BRASS • LATÓN PLATA *OTTONE ARGENTO • LAITON ARGENT* |
|---|---|
| | FK003D0430 |
| | (3.5 x 8 mm) |

## GALFER FK 010A

*WASHER* • ARANDELA
*RONDELLA • RONDELLE*

| THREAD • *PASO ROSCA* *FILETTO • FILL* | SILVER BRASS • LATÓN PLATA *OTTONE ARGENTO • LAITON ARGENT* |
|---|---|
| | FK003D010A(Al) |
| | (14x10x1mm) |
| | FK003D010F(Al) |
| | (16x12x1mm) |

GALFER FK 7020

| THREAD · PASO ROSCA FILETTO • FILL | SILVER BRASS · LATÓN PLATA OTTONE ARGENTO · LAITON ARGENT |
|---|---|
| 10 mm | FK003D7020 |
| 12 mm | FK013D7021 |

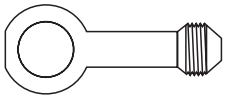

*K7 STRAIGHT BANJO* • BANJO RECTO K7
*RACCORDO DRITTO K7 • BANJO DROIT K7*

GALFER FK 7030

| THREAD · PASO ROSCA FILETTO • FILL | SILVER BRASS · LATÓN PLATA OTTONE ARGENTO · LAITON ARGENT |
|---|---|
| 10 mm | FK003D7030 |
| 12 mm | FK013D7031 |

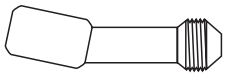

*12° K7 BANJO* • BANJO 12º K7
*RACCORDO 12° K7 • BANJO 12° K7*

GALFER FK 7401

| THREAD · PASO ROSCA FILETTO • FILL | SILVER BRASS · LATÓN PLATA OTTONE ARGENTO · LAITON ARGENT |
|---|---|
| 10 mm | FK003D7401 |

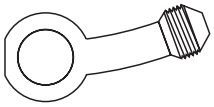

*20° K7 LATERAL BANJO* • BANJO LATERAL 20º K7
*RACCORDO LATERALE 20° K7 • BANJO LATÉRAL 20° K7*

GALFER FK 704C

| THREAD · PASO ROSCA FILETTO • FILL | SILVER BRASS · LATÓN PLATA OTTONE ARGENTO · LAITON ARGENT |
|---|---|
| 10 mm | FK003D704C |
| 12 mm | FK013D705C |

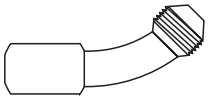

*40° K7 SHORT BANJO* • BANJO CORTO 40º K7
*RACCORDO CORTO 40° K7 • BANJO COURT 40° K7*

GALFER FK 704L

| THREAD · PASO ROSCA FILETTO • FILL | SILVER BRASS · LATÓN PLATA OTTONE ARGENTO · LAITON ARGENT |
|---|---|
| 10 mm | FK003D704L |
| 12 mm | FK013D705L |

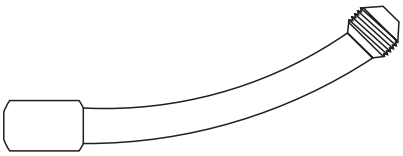

*40° K7 LONG BANJO* • BANJO LARGO 40º K7
*RACCORDO LUNGO 40° K7 • BANJO LONG 40° K7*

GALFER FK 728C

| THREAD · PASO ROSCA FILETTO • FILL | SILVER BRASS · LATÓN PLATA OTTONE ARGENTO · LAITON ARGENT |
|---|---|
| 10 mm | FK003D728C |
| 12 mm | FK013D729C |

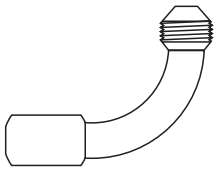

*90° K7 SHORT BANJO* • BANJO CORTO 90º K7
*RACCORDO CORTO 90° K7 • BANJO COURT 90° K7*

## GALFER FK 728L

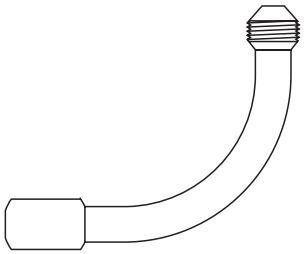

*90° K7 LONG BANJO* • BANJO LARGO 90º K7
*RACCORDO LUNGO 90° K7 • BANJO LONG 90° K7*

| THREAD · *PASO ROSCA* *FILETTO • FILL* | SILVER BRASS · LATÓN PLATA *OTTONE ARGENTO · LAITON ARGENT* |
|---|---|
| 10 mm | FK003D728L |
| 12 mm | FK013D729L |
| | |
| | |
| | |
| | |
| | |
| | |
| | |

## GALFER FK 732A

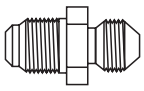

*K7 ADAPTER* • ADAPTADOR K7
*ADATTATORE K7 • ADAPTATEUR K7*

| THREAD · *PASO ROSCA* *FILETTO • FILL* | SILVER BRASS · LATÓN PLATA *OTTONE ARGENTO · LAITON ARGENT* |
|---|---|
| 10 x 100 | FK003D732A |
| 10 x 125 | FK003D732B |
| 3/8 | FK003D732C |
| 1/8 | FK003D732D |
| | |
| | |
| | |
| | |
| | |

## GALFER FK 7024

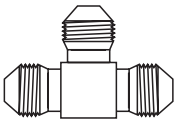

*K7 3 WAY HOSE FITTING* • REPARTIDOR 3 VÍAS K7
*RIPARTITORE A 3 VIE K7 • RÉPARTITEUR 3 VOIES K7*

| THREAD · *PASO ROSCA* *FILETTO • FILL* | SILVER BRASS · LATÓN PLATA *OTTONE ARGENTO · LAITON ARGENT* |
|---|---|
| | FK003D7024 |
| | |
| | |
| | |
| | |
| | |
| | |
| | |
| | |

## GALFER FK K7

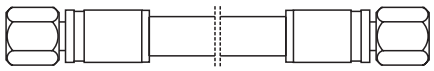

*K7 HOSES* • TUBERÍA K7
*TUBI FRENO K7 • DURITES K7*

| REF. | SIZE |
|---|---|
| FK015* | 15 cm |
| FK025* | 25 cm |
| FK030* | 30 cm |
| FK035* | 35 cm |
| FK040* | 40 cm |
| FK045* | 45 cm |
| FK050* | 50 cm |
| FK055* | 55 cm |
| FK060* | 60 cm |
| FK065* | 65 cm |
| FK070* | 70 cm |
| FK075* | 75 cm |
| FK080* | 80 cm |
| FK085* | 85 cm |
| FK090* | 90 cm |
| FK095* | 95 cm |
| FK100* | 100 cm |
| FK105* | 105 cm |
| FK110* | 110 cm |
| FK120* | 120 cm |
| FK130* | 130 cm |
| FK140* | 140 cm |
| FK150* | 150 cm |
| FK160* | 160 cm |
| FK170* | 170 cm |
| FK180* | 180 cm |
| FK190* | 190 cm |
| FK200* | 200 cm |

| REF. | COLOUR |
|---|---|
| *K0011 | *Black* Negro *Nero* *Noir* |
| *K0012 | *Transparent* Transparente *Transparente* *Transparent* |
| *K0031 | *Carbon* Carbono *Carbonio* *Carbon* |

# ACCESSORIES • ACCESORIOS
## ACCESSORI • ACCESSOIRES

### GALFER FK 005A

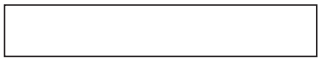

*PVC SHEATH* • VAINA PVC
*GUAINA PVC • ÉTUIL PVC*

| SIZE | COLOUR | REF. |
|---|---|---|
| 7 X 10 | BLACK | FK000D005A |
| 7 X 10 | WHITE | FK000D005B |
| 8 X 10 | BLACK | FK000D006A |
| 8 X 10 | WHITE | FK000D006B |
| 8.5 X 10 | WHITE | FK000D007B |
| 8 X 10 | WHITE COARSE | FK000D006C |
| 8 X 11.5 | WHITE COARSE | FK000D006D |

### GALFER FK 035A

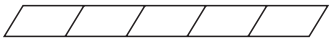

*SPIRAL BINDING* • PROTECTOR HELICOIDAL
*RILEGATURE • PROTECTEUR HÉLICOÏDAL*

| SIZE | COLOUR | REF. |
|---|---|---|
| 4 x 12 | WHITE | FK000D035A |
| 4 x 12 | BLACK | FK000D035B |

### GALFER FK 903A

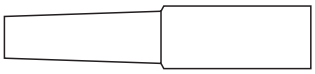

*RUBBER DUST COVER* • GUARDAPOLVO GOMA
*PROTEZIONE ANTIPOLVERE DI GOMMA • CACHE-POUSSIERE GOMME*

| SIZE | COLOUR | REF. |
|---|---|---|
| 37 x ø 9.5 x ø 5 | BLACK | FK000D903E |

### GALFER FK 904A

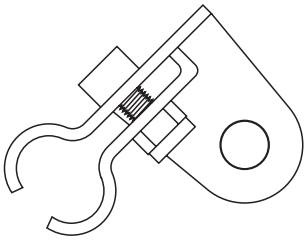

*90° SHEATH CLAMP* • BRIDA VAINA 90º
*MORSETTO RIVESTIMENTO 90° • BRIDE ÉTUIL 90°*

| SIZE | COLOUR | REF. |
|---|---|---|
| | WHITE | FK003D904A(Fe) |
| | BLACK | FK003D904B(Fe) |

### GALFER FK 905A

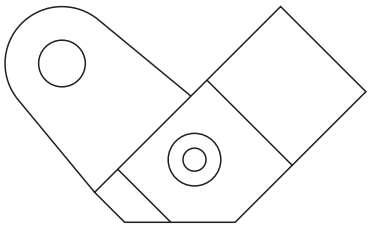

*STRAIGHT SHEATH CLAMP* • BRIDA VAINA RECTA
*MORSETTO RIVESTIMENTO DRITTO • BRIDE ÉTUIL DROIT*

| SIZE | COLOUR | REF. |
|---|---|---|
| | WHITE | FK003D905A(Fe) |
| | BLACK | FK003D905B(Fe) |

GALFER
PERFORMANCE BRAKING SYSTEMS
1
TRIAL & SUPERENDURO
WORLD CHAMPION
2014
EMMA BRISTOW
SHERCO

GALFER MOTO

# SP

# BRACKETS FOR CALIPER
# SOPORTES PARA PINZA
# SUPPORTI PINZA
# SUPPORTS ÉTRIER

## GALFER SP 001

Scooter · Off-Road · Street · Sport&GP

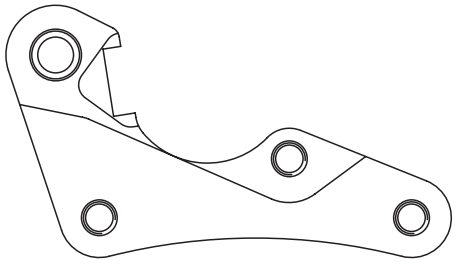

| BRAND & MODEL MARCA Y MODELO | C.C. | YEAR | | øext. | FRONT DF |
|---|---|---|---|---|---|
| **HONDA** | | | | | |
| CRF 250 R / X | 250 | 04 | 14 | 270 | DF014FLS |
| CRF 450 F / R | 450 | 04 | 14 | 270 | DF014FLS |

## GALFER SP 002

Scooter · Off-Road · Street · Sport&GP

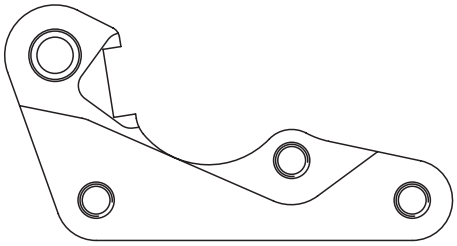

| BRAND & MODEL MARCA Y MODELO | C.C. | YEAR | | øext. | FRONT DF |
|---|---|---|---|---|---|
| **HONDA** | | | | | |
| CRF 250 R / X | 250 | 04 | 14 | 260 | DF014FLX |
| CRF 450 F / R | 450 | 04 | 14 | 260 | DF014FLX |

## GALFER SP 003

Scooter · Off-Road · Street · Sport&GP

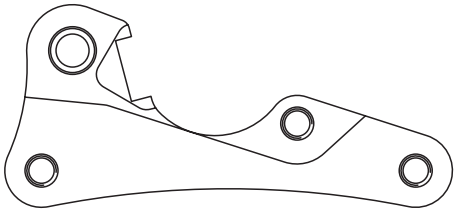

| BRAND & MODEL MARCA Y MODELO | C.C. | YEAR | | øext. | FRONT DF |
|---|---|---|---|---|---|
| **HM** | | | | | |
| CRE 125 R | 125 | 03 | | 270 | DF014FLX |
| CRE 250 F / R | 250 | 03 | | 270 | DF014FLX |
| CRE 450 F | 450 | 03 | | 270 | DF014FLX |
| **HONDA** | | | | | |
| CR 125 R | 125 | 98 | 14 | 270 | DF014FLX |
| CR 250 R | 250 | 97 | 14 | 270 | DF014FLX |
| CRF 450 F / R | 450 | 01 | 03 | 270 | DF014FLX |

## GALFER SP 004

Scooter · Off-Road · Street · Sport&GP

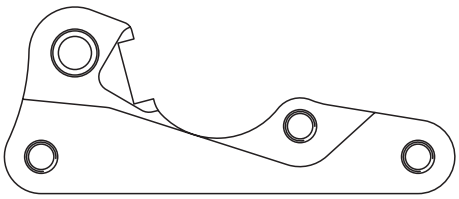

| BRAND & MODEL MARCA Y MODELO | C.C. | YEAR | | øext. | FRONT DF |
|---|---|---|---|---|---|
| **YAMAHA** | | | | | |
| YZ 125, WR | 125 | 98 | 07 | 270 | DF301FLS |
| YZ 250 F, WR F 4T | 250 | 00 | 06 | 270 | DF301FLS |
| YZ 250, WR | 250 | 99 | 07 | 270 | DF301FLS |
| WR 400 F / YZ 400 F | 400 | 99 | 99 | 270 | DF301FLS |
| WR 426 F / YZ 426 F | 425 | 00 | 02 | 270 | DF301FLS |
| WR 450 F | 450 | 03 | | 270 | DF301FLS |
| YZ 450 F | 450 | 03 | 07 | 270 | DF301FLS |

## GALFER SP 005

Scooter · Off-Road · Street · Sport&GP

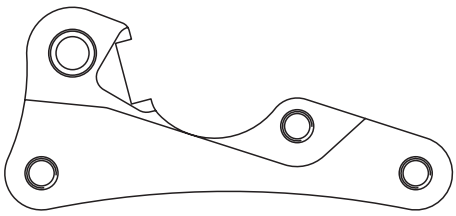

| BRAND & MODEL MARCA Y MODELO | C.C. | YEAR | | øext. | FRONT DF |
|---|---|---|---|---|---|
| **KAWASAKI** | | | | | |
| KX (All cc) | - | 95 | 02 | 270 | DF150FLS |
| KX / F (All cc) | - | 03 | 05 | 270 | DF182FLS |
| KX / F (All cc) | - | 06 | | 270 | DF200FLS |
| **SUZUKI** | | | | | |
| RM (All cc) | - | 00 | | 270 | DF301FLS |
| RMZ 250 | 250 | 04 | 05 | 270 | DF182FLS |
| RMZ 250 / RMZ 450 | - | 06 | | 270 | DF349FLS |
| DRZ 400 S / Z | 400 | 00 | | 270 | DF301FLS |

## GALFER SP 008

Scooter · Off-Road · Street · Sport&GP

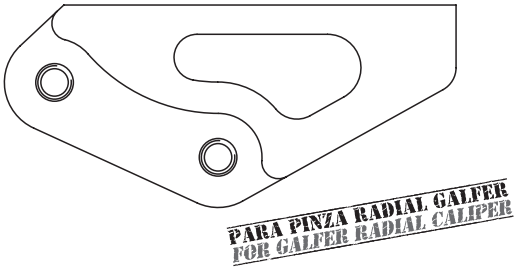


| BRAND & MODEL MARCA Y MODELO | C.C. | YEAR | | øext. | FRONT DF |
|---|---|---|---|---|---|
| **YAMAHA** | | | | | |
| AEROX (Galfer radial caliper) | 50 | 97 | | 220 | DF037WS |
| AEROX 100 (Galfer radial caliper) | 100 | 00 | | 220 | DF037WS |
| JOG R (Galfer radial caliper) | 50 | 02 | | 200 | DF629FLS |
| JOG RR LC (Galfer radial caliper) | 50 | 02 | | 200 | DF629FLS |
| BW'S (Galfer radial caliper) | 50 | 06 | | 210 | DF473WS |
| **MBK MOTOBEKANE** | | | | | |
| BOOSTER (Galfer radial caliper) | 50 | 06 | | 210 | DF473WS |
| NITRO / MATCH (Galfer radial caliper) | 50 | 97 | | 220 | DF629FLS |

| BRAND & MODEL / MARCA Y MODELO | C.C. | YEAR | | ØEXT. | FRONT DF |
|---|---|---|---|---|---|
| **YAMAHA** | | | | | |
| AEROX | 50 | 97 | | 220 | DF037WS |
| AEROX 100 | 100 | 00 | | 220 | DF037WS |
| JOG R | 50 | 02 | | 200 | DF629FLS |
| JOG RR LC | 50 | 02 | | 200 | DF629FLS |
| BW'S | 50 | 06 | | 210 | DF473WS |
| **MBK MOTOBEKANE** | | | | | |
| BOOSTER | 50 | 06 | | 210 | DF473WS |
| NITRO / MATCH | 50 | 97 | | 220 | DF629FLS |

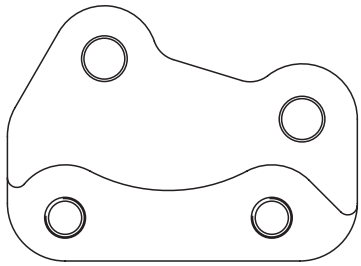

GALFER SP 009
Scooter
Off-Road
Street
Sport&GP

| BRAND & MODEL / MARCA Y MODELO | C.C. | YEAR | | ØEXT. | FRONT DF |
|---|---|---|---|---|---|
| **HONDA** | | | | | |
| DYLAN (Galfer radial caliper) | 125 | 02 | | 240 | DF007W |
| SH 125 (Galfer radial caliper) | 125 | 05 | | 240 | DF007W |
| SH 150 (Galfer radial caliper) | 150 | 05 | | 240 | DF007W |
| **YAMAHA** | | | | | |
| SH 125 SCOOPY (Galfer radial caliper) | 125 | 01 | | 260 | DF071WS |
| SH 125i SCOOPY (Galfer radial caliper) | 125 | 05 | | 260 | DF071WS |
| SH 150 SCOOPY (Galfer radial caliper) | 150 | 01 | | 260 | DF071WS |
| SH 150i SCOOPY (Galfer radial caliper) | 150 | 05 | | 260 | DF071WS |

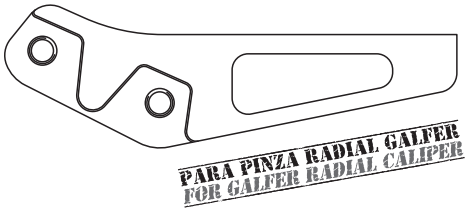


GALFER SP 012
Scooter
Off-Road
Street
Sport&GP

| BRAND & MODEL / MARCA Y MODELO | C.C. | YEAR | | ØEXT. | FRONT DF |
|---|---|---|---|---|---|
| **YAMAHA** | | | | | |
| CYGNUS 125 X | 50 | 03 | | 260 | DF504FLS |
| | | | | | |
| | | | | | |
| | | | | | |
| | | | | | |
| | | | | | |
| | | | | | |

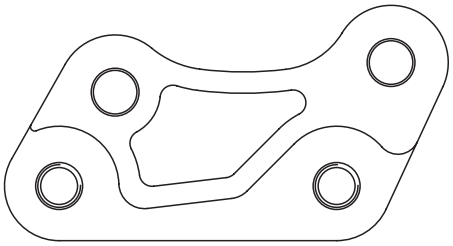

GALFER SP 015
Scooter
Off-Road
Street
Sport&GP

| BRAND & MODEL / MARCA Y MODELO | C.C. | YEAR | | ØEXT. | FRONT DF |
|---|---|---|---|---|---|
| **KTM** | | | | | |
| All < 640 cc | - | 00 | 09 | 270 | DF606FLS |
| **HUSABERG** | | | | | |
| All 400 - 650 cc | - | 00 | 09 | 270 | DF606FLS |
| **HUSQVARNA** | | | | | |
| 125 & 250 CR / TC / TE | - | 00 | | 270 | DF635FLS |
| TE 410 | 410 | 00 | | 270 | DF635FLS |
| 450 TC / TE | 450 | 05 | | 270 | DF635FLS |
| 510 TC / TE | 510 | 00 | | 270 | DF635FLS |

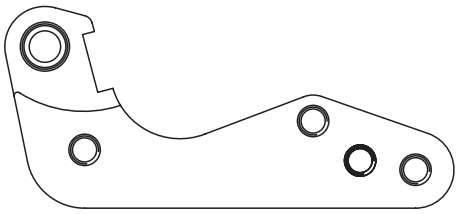

GALFER SP 021
Scooter
Off-Road
Street
Sport&GP

| BRAND & MODEL / MARCA Y MODELO | C.C. | YEAR | | ØEXT. | FRONT DF |
|---|---|---|---|---|---|
| **YAMAHA** | | | | | |
| YZ 250 F | 250 | 07 | | 270 | DF301FLS |
| YZ 450 F | 450 | 08 | | 270 | DF301FLS |
| | | | | | |
| | | | | | |
| | | | | | |
| | | | | | |
| | | | | | |

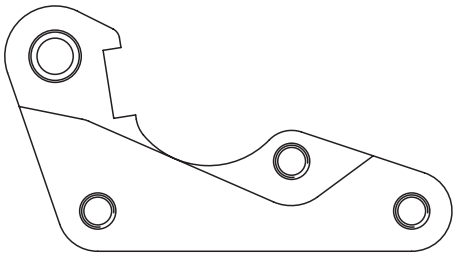

GALFER SP 023
Scooter
Off-Road
Street
Sport&GP

| BRAND & MODEL / MARCA Y MODELO | C.C. | YEAR | | ØEXT. | FRONT DF |
|---|---|---|---|---|---|
| **HONDA** | | | | | |
| SH 125 | 125 | 01 | | 260 | DF071WS |
| SH 125i | 125 | 05 | | 260 | DF071WS |
| SH 150 | 150 | 01 | | 260 | DF071WS |
| SH 150i | 150 | 05 | | 260 | DF071WS |
| | | | | | |
| | | | | | |
| | | | | | |

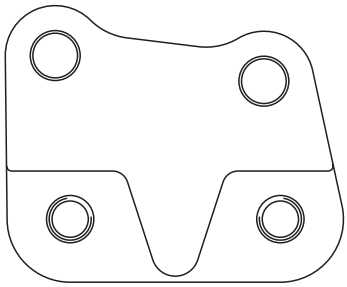

GALFER SP 025
Scooter
Off-Road
Street
Sport&GP

## GALFER SP 027

Scooter
Off-Road
Street
Sport&GP

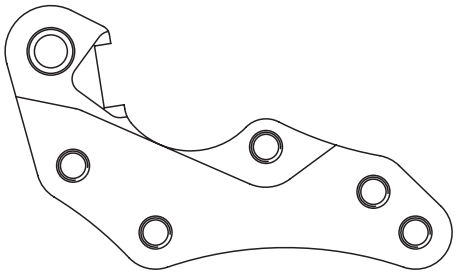

| BRAND & MODEL MARCA Y MODELO | C.C. | YEAR | | øext. | FRONT DF |
|---|---|---|---|---|---|
| **GAS GAS** | | | | | |
| EC / MC 125 | 125 | 01 | | 270 | DF677FLS |
| EC 200 | 200 | 01 | | 270 | DF677FLS |
| EC / MC 250 | 250 | 01 | | 270 | DF677FLS |
| EC 250 FSE | 250 | 01 | | 270 | DF677FLS |
| EC 300 | 300 | 01 | | 270 | DF677FLS |
| EC 400 FSE | 400 | 01 | | 270 | DF677FLS |
| PAMPERA 400 | 400 | 06 | | 270 | DF677FLS |
| EC 450 FSE | 450 | 03 | | 270 | DF677FLS |

## GALFER SP 029

Scooter
Off-Road
Street
Sport&GP

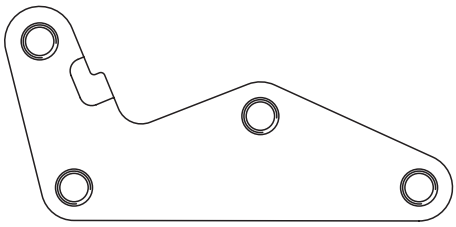

| BRAND & MODEL MARCA Y MODELO | C.C. | YEAR | | øext. | FRONT DF |
|---|---|---|---|---|---|
| **HONDA** | | | | | |
| CRF 150 R | 150 | 07 | | 260 | DF050FLX |

## GALFER SP 031

Scooter
Off-Road
Street
Sport&GP

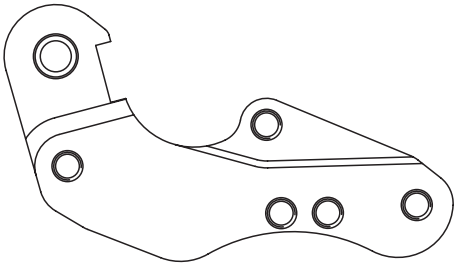

| BRAND & MODEL MARCA Y MODELO | C.C. | YEAR | | øext. | FRONT DF |
|---|---|---|---|---|---|
| **YAMAHA** | | | | | |
| YZ 125, WR | 125 | 98 | 07 | 260 | DF301FLX |
| YZ 250 F, WR F 4T | 250 | 00 | 06 | 260 | DF301FLX |
| YZ 250, WR | 250 | 99 | 07 | 260 | DF301FLX |
| WR 400 F / YZ 400 F | 400 | 99 | 99 | 260 | DF301FLX |
| WR 426 F / YZ 426 F | 425 | 00 | 02 | 260 | DF301FLX |
| WR 450 F | 450 | 03 | | 260 | DF301FLX |
| YZ 450 F | 450 | 03 | 07 | 260 | DF301FLX |

## GALFER SP 033

Scooter
Off-Road
Street
Sport&GP

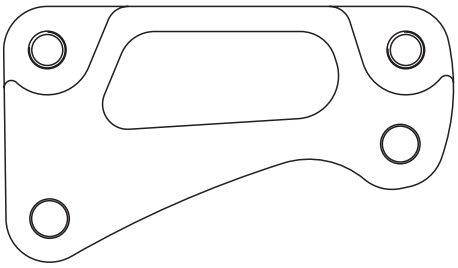

| BRAND & MODEL MARCA Y MODELO | C.C. | YEAR | | øext. | FRONT DF |
|---|---|---|---|---|---|
| **YAMAHA** | | | | | |
| XP 500 T-MAX | 500 | 04 | 07 | 298 | DF474CWR |
| XP 500 T-MAX | 500 | 08 | | 298 | DF495CWR |
| XP 530 T-MAX | 530 | 12 | 14 | 298 | DF495CWR |

## GALFER SP 035

Scooter
Off-Road
Street
Sport&GP

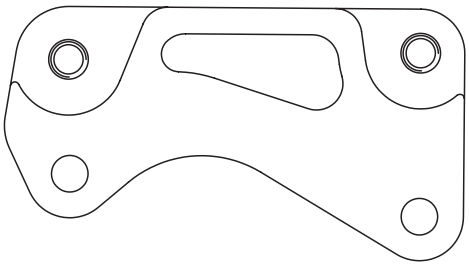

| BRAND & MODEL MARCA Y MODELO | C.C. | YEAR | | øext. | FRONT DF |
|---|---|---|---|---|---|
| **HONDA** | | | | | |
| SH 125i / 150i SCOOPY (D-D) | 125 | 09 | | 280 | DF007WS |
| SH SCOOPY 300 | 300 | 07 | | 296 | DF006W |

## GALFER SP 041

Scooter
Off-Road
Street
Sport&GP

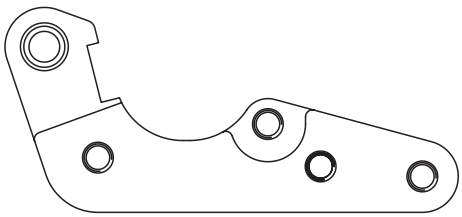

| BRAND & MODEL MARCA Y MODELO | C.C. | YEAR | | øext. | FRONT DF |
|---|---|---|---|---|---|
| **KTM** | | | | | |
| All cc | - | 10 | | 270 | DF606FLS |

| BRAND & MODEL / MARCA Y MODELO | C.C. | YEAR | | ø ext. | FRONT DF |
|---|---|---|---|---|---|
| **KTM** | | | | | |
| All cc (rear) | - | 10 | | 240 | DF606WS |

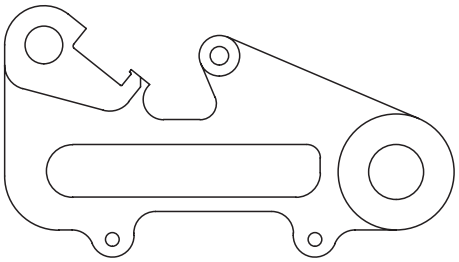

GALFER SP 043
Scooter / Off-Road / Street / Sport&GP

| BRAND & MODEL / MARCA Y MODELO | C.C. | YEAR | | ø ext. | FRONT DF |
|---|---|---|---|---|---|
| **HONDA** | | | | | |
| CRF 250 R / X | 250 | 15 | | 270 | DF014FLS |
| CRF 450 F / R | 450 | 15 | | 270 | DF014FLS |

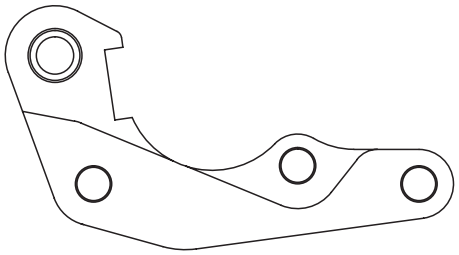

GALFER SP 045
Scooter / Off-Road / Street / Sport&GP

| BRAND & MODEL / MARCA Y MODELO | C.C. | YEAR | | ø ext. | FRONT DF |
|---|---|---|---|---|---|
| **HM** | | | | | |
| CRE 125 R / 250 F-R / 450 F | - | 04 | | 320 | DF014CW |
| **HONDA** | | | | | |
| CR 125 R / E | 125 | 04 | | 320 | DF014CW |
| CR 250 R- E / CRF R-X | 250 | 04 | | 320 | DF014CW |
| CRF 450 R-X | 450 | 04 | | 320 | DF014CW |
| **GALFER** | | | | | |
| GALFER CALIPER PF168G0108I | - | | | - | - |

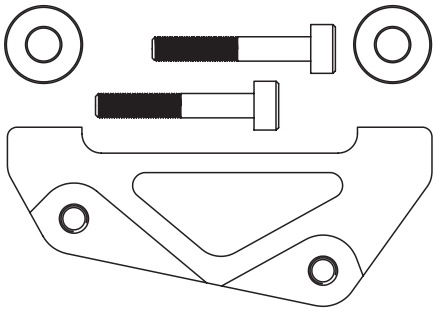

GALFER SP 114
Scooter / Off-Road / Street / Sport&GP

| BRAND & MODEL / MARCA Y MODELO | C.C. | YEAR | | ø ext. | FRONT DF |
|---|---|---|---|---|---|
| **KAWASAKI** | | | | | |
| ZX-R | - | 06 | | 320 | DF184CWS |

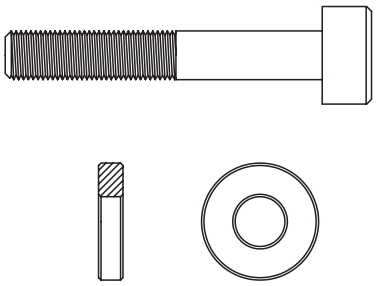

GALFER SP 184
Scooter / Off-Road / Street / Sport&GP

| BRAND & MODEL / MARCA Y MODELO | C.C. | YEAR | | ø ext. | FRONT DF |
|---|---|---|---|---|---|
| **HONDA** | | | | | |
| CR / CRF Brembo caliper | 250 | | 03 | 320 | DF014SM |
| CR / CRF Brembo caliper | 450 | | 03 | 320 | DF014SM |

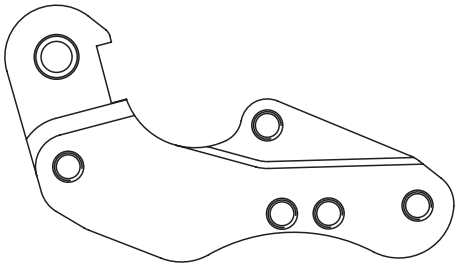

GALFER SP 301
Scooter / Off-Road / Street / Sport&GP

| BRAND & MODEL / MARCA Y MODELO | C.C. | YEAR | | ø ext. | FRONT DF |
|---|---|---|---|---|---|
| **YAMAHA** | | | | | |
| XP 530 T-MAX | 530 | 15 | | 298 | DF495CWR |

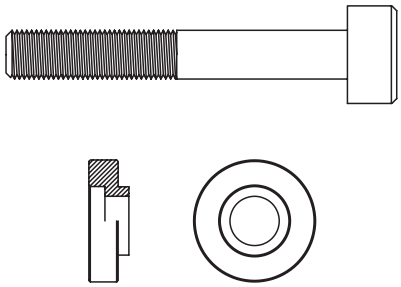

GALFER SP 475
Scooter / Off-Road / Street / Sport&GP

GALFER
PERFORMANCE BRAKING SYSTEMS
PATENTED
GALFER DISC WAVE®
BMW C 600 SPORT

GALFER MOTO

KG

# BRAKE KITS
# KITS DE FRENO
# KITS FRENO
# KITS DE FREIN

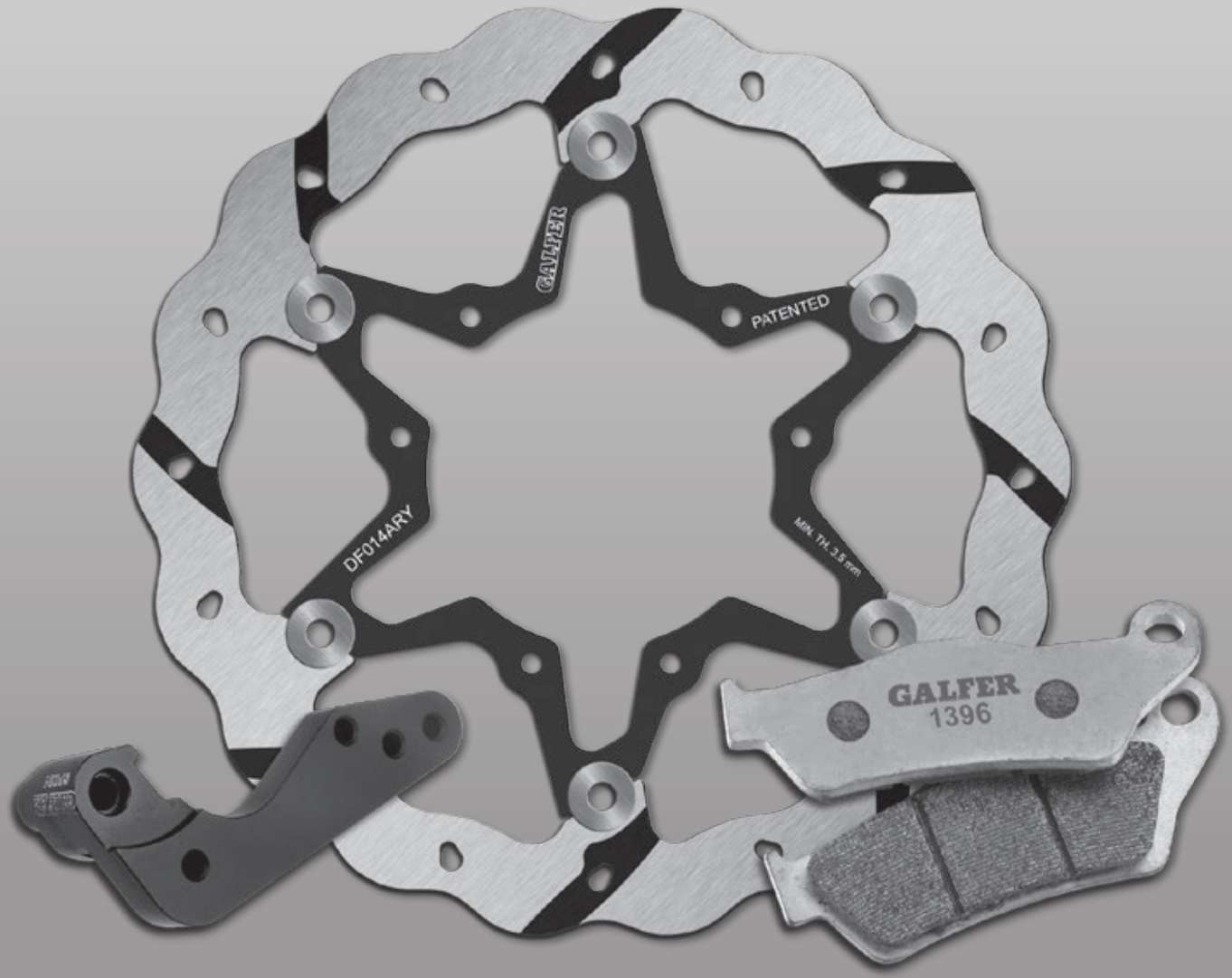

| 1 | 2 | | 4 | | 6 | | 8 | | |
|---|---|---|---|---|---|---|---|---|---|
| REF. GALFER Kit | APPLICATION • APLICACIÓN | WHEEL | DF SIZE | FD FRONT | N° DF | DF FRONT | SP FRONT | FD REAR | DF REAR |
| | | | | | | | | | |
| | | | | | | | | | |
| | | | | | | | | | |
| | | 3 | | 5 | | 7 | | 5 | 7 |

## DESCRIPTION • DESCRIPCIÓN • DESCRIZIONE • DESCRIPTION

**1**
**Galfer brake Kit reference**
**Referencia del Kit de freno Galfer**
Riferimento Kit freno Galfer
Référence kit de frein Galfer

**2**
**Brand & model of the motocycle**
**Marca y modelo de la moto**
Marca e modello del motociclo
Marque et modeéle de la moto

**3**
**Kit brake application**
**Aplicación del Kit de freno**
Applicazione freno Kit
Kit de freinage

**4**
**Front brake disc measure**
**Medida del disco de freno delantero**
Misurare il disco freno anteriore
Mesurer le disque de frein avant

**5**
**Complete brake pads reference**
**Referencia completa de las pastillas de freno**
Riferimento complete pastiglie freno
Référence complète plaquettes de frein

**6**
**Number of front brake discs**
**Número de discos de freno delanteros**
Numero di dischi freno anteriori
Nombre de disques de frein avant

**7**
**Complete brake disc reference**
**Referencia completa del disco de freno**
Riferimento completedisco freno
Référence complète plaquettes de frein

**8**
**Bracket for caliper reference**
**Referencia del soporte para pinza**
Riferimento support pinza
Référence support étrier

| REF. GALFER Kit | APPLICATION • APLICACIÓN | WHEEL | DF SIZE | FD FRONT | N° DF | DF FRONT | SP FRONT | FD REAR | DF REAR |
|---|---|---|---|---|---|---|---|---|---|
| **KG0062FS** | Honda SH 300 ø296mm | Front & Rear | OS | FD344G1375 | 1 | DF006W | SP035 | FD345G1054 | DF083W |
| **KG006WFS** | Honda SH 300 ø296mm | Front | OS | FD344G1375 | 1 | DF006W | SP035 | - | - |
| **KG0072FS** | Honda SH 125-150 (DD) | Front & Rear | OE | FD344G1380 | 1 | DF007WS | - | FD345G1054 | DF007W |
| **KG007WFS** | Honda SH 125-150 (DD) ø280mm | Front | OS | FD344G1380 | 1 | DF007WS | SP035 | - | - |
| **KG014RFS** | Honda CR / CRF (-2014) ø270mm | Front | OS | FD164G1396 | 1 | DF014FRS | SP001 | - | - |
| **KG014RWS** | Honda CR / CRF (-2014) ø270mm | Front | OS | FD164G1396 | 1 | DF014RWS | SP001 | - | - |
| **KG014WS** | Honda CR / CRF (-2014) ø270mm | Front | OS | FD164G1396 | 1 | DF014WS | SP001 | - | - |
| **KG014WFS** | Honda CR / CRF (-2014) ø270mm | Front | OS | FD164G1396 | 1 | DF014FLS | SP001 | - | - |
| **KG083WF** | Honda SH 300 | Front | OE | FD344G1054 | 1 | DF083W | - | - | - |
| **KG071WFS** | Honda SH 125-150 ø260mm | Front | OS | FD284G1380 | 1 | DF071WS | SP025 | - | - |
| **KG078WF** | Honda PCX / Vision | Front | OE | FD439G1383 | 1 | DF078W | - | - | - |
| **KG082RFS** | Honda CRF (2015-) ø270mm | Front | OS | FD164G1396 | 1 | DF014FRS | SP045 | - | - |
| **KG082RWS** | Honda CRF (2015-) ø270mm | Front | OS | FD164G1396 | 1 | DF014RWS | SP045 | - | - |
| **KG082WS** | Honda CRF (2015-) ø270mm | Front | OS | FD164G1396 | 1 | DF082WS | SP045 | - | - |
| **KG082WFS** | Honda CRF (2015-) ø270mm | Front | OS | FD164G1396 | 1 | DF014FLS | SP045 | - | - |
| **KG200RFS** | Kawasaki KX (-2014) ø270mm | Front | OS | FD164G1396 | 1 | DF200FRS | SP005 | - | - |
| **KG200RWS** | Kawasaki KX (-2014) ø270mm | Front | OS | FD164G1396 | 1 | DF200RWS | SP005 | - | - |
| **KG200WS** | Kawasaki KX (-2014) ø270mm | Front | OS | FD164G1396 | 1 | DF200WS | SP005 | - | - |
| **KG200WFS** | Kawasaki KX (-2014) ø270mm | Front | OS | FD164G1396 | 1 | DF200FLS | SP005 | - | - |
| **KG301RFS** | Yamaha YZF ø270mm ø270mm | Front | OS | FD164G1396 | 1 | DF301FRS | SP004 | - | - |
| **KG301RWS** | Yamaha YZF ø270mm ø270mm | Front | OS | FD164G1396 | 1 | DF301RWS | SP004 | - | - |
| **KG301WS** | Yamaha YZF ø270mm ø270mm | Front | OS | FD164G1396 | 1 | DF301WS | SP004 | - | - |
| **KG301WFS** | Yamaha YZF ø270mm ø270mm | Front | OS | FD164G1396 | 1 | DF301FLS | SP004 | - | - |
| **KG349RFS** | Suzuki RMZ ø270mm | Front | OS | FD164G1396 | 1 | DF349FRS | SP005 | - | - |
| **KG349RWS** | Suzuki RMZ ø270mm | Front | OS | FD164G1396 | 1 | DF349RWS | SP005 | - | - |
| **KG349WS** | Suzuki RMZ ø270mm | Front | OS | FD164G1396 | 1 | DF349WS | SP005 | - | - |
| **KG349WFS** | Suzuki RMZ ø270mm | Front | OS | FD164G1396 | 1 | DF349FLS | SP005 | - | - |
| **KG473WFS** | MBK Booster / Yamaha BW's ø210mm | Front | OS | FD153G1054 | 1 | DF473WS | SP009 | - | - |
| **KG4743FS** | Yamaha T-MAX 500 (08) | Front & Rear | OS | FD178G1375 | 2 | DF474CWR | SP033I/D | FD352G1380 | DF494W |
| **KG4953FS** | Yamaha T-MAX 530 (-2014) | Front & Rear | OS | FD178G1375 | 2 | DF495CWR | SP033I/D | FD260G1380 | DF528W |
| **KG495BFS** | Yamaha T-MAX 530 (2015-) | Front & Rear | OS | FD178G1375 | 2 | DF495CWR | SP475 | FD260G1380 | DF528W |
| **KG500WF** | Yamaha X-MAX 125-250 | Front & Rear | OE | FD266G1380 | 1 | DF500W | - | FD214G1380 | DF524W |
| **KG5033F** | Yamaha T-MAX 500 (04-07) | Front & Rear | OE | FD169G1380 | 2 | DF503FLW | - | FD352G1380 | DF494W |
| **KG5033FLW** | Yamaha X-MAX 400 | Front & Rear | OE | FD266G1054 | 2 | DF503FLW | - | FD474G1380 | DF501W |
| **KG503CF** | Yamaha T-MAX 530 | Front & Rear | OE | FD178G1370 | 2 | DF503FLW | - | FD260G1380 | DF528W |
| **KG5262F** | Yamaha YZF 125 R | Front & Rear | OE | FD138G1054 | 1 | DF526W | - | FD336G1054 | DF527W |
| **KG606RFS** | KTM (2010-) - Husqvarna (2014-) ø270mm | Front | OS | FD138G1396 | 1 | DF606FRS | SP041 | - | - |
| **KG606RWS** | KTM (2010-) - Husqvarna (2014-) ø270mm | Front | OS | FD138G1396 | 1 | DF606RWS | SP041 | - | - |
| **KG606WS** | KTM (2010-) - Husqvarna (2014-) ø270mm | Front | OS | FD138G1396 | 1 | DF606WS | SP041 | - | - |
| **KG606WFS** | KTM (2010-) - Husqvarna (2014-) ø270mm | Front | OS | FD138G1396 | 1 | DF606FLS | SP041 | - | - |
| **KG677RFS** | Gas Gas ø270mm | Front | OS | FD164G1396 | 1 | DF677FRS | SP027 | - | - |
| **KG677WFS** | Gas Gas ø270mm | Front | OS | FD164G1396 | 1 | DF677FLS | SP027 | - | - |
| **KG7022F** | BMW R 1200 GS | Front | OE | FD271G1375 | 2 | DF702W | - | - | - |
| **KG7023F** | BMW R 1200 GS | Front & Rear | OE | FD271G1375 | 2 | DF702W | - | FD186G1371 | DF763W |
| **KG8163F** | BMW C 600 Sport | Front & Rear | OE | FD266G1054 | 2 | DF816FLW | - | FD266G1054 | DF816W |

OE: Original equipment (original replacement disc) OS: Oversized disc (needs bracket to adapt the brake caliper)
OE: Equipo original (disco de remplazo del original) OS: Disco sobremedida (necesita soporte para adaptar la pinza de freno)

# KITS OFF-ROAD FIXED OVERSIZE FRONT DISC (DF WS)

## KG014WS

| FRONT | | | | REAR | |
|---|---|---|---|---|---|
| FD164G1396 | 1 | DF014WS | SP001 | - | - |

| BRAND & MODEL MARCA Y MODELO | C.C. | YEAR | |
|---|---|---|---|
| **HM** | | | |
| CRE 125 R | 125 | 03 | |
| CRE 250 F | 250 | 03 | |
| CRE 250 R | 250 | 03 | |
| CRF 250 R | 250 | 09 | |
| CRE 250 X | 250 | 09 | |
| CRE 300 X | 300 | 09 | |
| CRE 450 F | 450 | 03 | |
| CRE 450 R | 450 | 09 | |
| CRF 450 R | 450 | 09 | |
| CRE 450 X | 450 | 09 | |
| CRE F 490 X | 490 | 07 | |
| CRE 500 X | 500 | 09 | |
| **HONDA** | | | |
| CR 125 R | 125 | 95 | 07 |
| CR 250 R | 250 | 95 | 07 |
| CRF 250 R | 250 | 04 | 14 |
| CRF 250 X | 250 | 04 | |
| CRF 250 XR LD | 250 | 13 | |
| CRF 450 F/R | 450 | 01 | 14 |
| CRF 450 X | 450 | 04 | |
| CRF 450 XR LD | 450 | 13 | |
| CR 500 R | 500 | 95 | 00 |

## KG082WS

| FRONT | | | | REAR | |
|---|---|---|---|---|---|
| FD164G1396 | 1 | DF014WS | SP045 | - | - |

| BRAND & MODEL MARCA Y MODELO | C.C. | YEAR | |
|---|---|---|---|
| **HONDA** | | | |
| CRF 250 R | 250 | 15 | |
| CRF 450 R | 450 | 15 | |

## KG200WS

| FRONT | | | | REAR | |
|---|---|---|---|---|---|
| FD164G1396 | 1 | DF200WS | SP005 | - | - |

| BRAND & MODEL MARCA Y MODELO | C.C. | YEAR | |
|---|---|---|---|
| **KAWASAKI** | | | |
| KX 125 | 125 | 06 | |
| KX 250 | 250 | 06 | |
| KX 250 F | 250 | 06 | 14 |
| KLX 450 R | 450 | 07 | |
| KX 450 F | 450 | 06 | 14 |
| KXE 450 F | 450 | 06 | |

## KG301WS

| FRONT | | | | REAR | |
|---|---|---|---|---|---|
| FD164G1396 | 1 | DF301WS | SP004 | - | - |

| BRAND & MODEL MARCA Y MODELO | C.C. | YEAR | |
|---|---|---|---|
| **SUZUKI** | | | |
| RM 125 | 125 | 96 | 06 |
| RM 250 | 250 | 96 | 06 |
| **YAMAHA** | | | |
| YZ 125 | 125 | 08 | |
| YZ 125, WR | 125 | 01 | 07 |
| WR 250 F 4T | 250 | 03 | |
| YZ 250 | 250 | 08 | |
| YZ 250, WR | 250 | 01 | 02 |
| YZ 250 F, WR F 4T | 250 | 01 | 06 |
| YZ 250 F | 250 | 07 | 13 |
| WR 426 F | 425 | 00 | 02 |
| YZ 426 F | 425 | 00 | 02 |
| WR 450 F | 450 | 03 | |
| YZ 450 F | 450 | 03 | |

## KG349WS

| FRONT | | | | REAR | |
|---|---|---|---|---|---|
| FD164G1396 | 1 | DF349WS | SP005 | - | - |

| BRAND & MODEL MARCA Y MODELO | C.C. | YEAR | |
|---|---|---|---|
| **SUZUKI** | | | |
| RM 250 Z | 250 | 07 | |
| RM 450 Z | 450 | 05 | |
| RMX 450 Z | 450 | 10 | |

## KG606WS

| FRONT | | | | REAR | |
|---|---|---|---|---|---|
| FD138G1396 | 1 | DF606WS | SP041 | - | - |

| BRAND & MODEL MARCA Y MODELO | C.C. | YEAR | |
|---|---|---|---|
| **HUSABERG** | | | |
| 125 TE | 125 | 11 | |
| 250 TE | 250 | 11 | |
| 300 TE | 300 | 11 | |
| 350 FE | 350 | 13 | |
| 390 FE | 390 | 10 | |
| 450 FE | 450 | 12 | |
| 450 FX | 450 | 10 | |
| 501 FE | 501 | 13 | |
| 570 FE | 570 | 09 | |
| **HUSQVARNA** | | | |
| 125 TC | 125 | 14 | |
| 125 TE | 125 | 14 | |
| 250 FC | 250 | 14 | |
| 250 FE | 250 | 14 | |
| 250 TC | 250 | 14 | |
| 250 TE | 250 | 14 | |
| 300 TE | 300 | 14 | |
| 350 FC | 350 | 14 | |
| 350 FE | 350 | 14 | |
| 450 FE | 450 | 14 | |
| 450 FC | 450 | 14 | |
| 501 FE | 501 | 14 | |
| **KTM** | | | |
| 144 SX | 144 | 08 | |
| 150 XC | 150 | 10 | |
| 250 EXC F | 250 | 15 | |
| 250 SX F | 250 | 15 | |
| 300 EXC - E | 300 | 08 | |
| 350 ECX F | 350 | 12 | |
| 350 SX FACTORY | 350 | 10 | |
| 350 SX F | 350 | 11 | |
| 350 XC F | 350 | 11 | |
| 450 EXC - R | 450 | 08 | |
| 450 XC SIX DAYS | 450 | 10 | |
| 500 EXC | 500 | 14 | |
| 530 EXC - R | 530 | 08 | |
| 530 XC / W | 530 | 08 | |
| 530 XC SIX DAYS | 530 | 10 | |

# KITS OFF-ROAD FIXED GROOVED OVERSIZE FRONT DISC (DF RWS)

## KG014RWS

| FRONT | | | | REAR | |
|---|---|---|---|---|---|
| FD164G1396 | 1 | DF014RWS | SP001 | - | - |

| BRAND & MODEL MARCA Y MODELO | C.C. | YEAR | |
|---|---|---|---|
| **HM** | | | |
| CRE 125 R | 125 | 03 | |
| CRE 250 F | 250 | 03 | |
| CRE 250 R | 250 | 03 | |
| CRF 250 R | 250 | 09 | |
| CRE 250 X | 250 | 09 | |
| CRE 300 X | 300 | 09 | |
| CRE 450 F | 450 | 03 | |
| CRE 450 R | 450 | 09 | |
| CRF 450 R | 450 | 09 | |
| CRE 450 X | 450 | 09 | |
| CRE F 490 X | 490 | 07 | |
| CRE 500 X | 500 | 09 | |
| **HONDA** | | | |
| CR 125 R | 125 | 95 | 07 |
| CR 250 R | 250 | 95 | 07 |
| CRF 250 R | 250 | 04 | 14 |
| CRF 250 X | 250 | 04 | |
| CRF 250 XR LD | 250 | 13 | |
| CRF 450 F/R | 450 | 01 | 14 |
| CRF 450 X | 450 | 04 | |
| CRF 450 XR LD | 450 | 13 | |
| CR 500 R | 500 | 95 | 00 |

## KG082RWS

| FRONT | | | | REAR | |
|---|---|---|---|---|---|
| FD164G1396 | 1 | DF014RWS | SP045 | - | - |

| BRAND & MODEL MARCA Y MODELO | C.C. | YEAR | |
|---|---|---|---|
| **HONDA** | | | |
| CRF 250 R | 250 | 15 | |
| CRF 450 R | 450 | 15 | |

## KG200RWS

| FRONT | | | | REAR | |
|---|---|---|---|---|---|
| FD164G1396 | 1 | DF200RWS | SP005 | - | - |

| BRAND & MODEL MARCA Y MODELO | C.C. | YEAR | |
|---|---|---|---|
| **KAWASAKI** | | | |
| KX 125 | 125 | 06 | |
| KX 250 | 250 | 06 | |
| KX 250 F | 250 | 06 | 14 |
| KLX 450 R | 450 | 07 | |
| KX 450 F | 450 | 06 | 14 |
| KXE 450 F | 450 | 06 | |

## KG301RWS

| FRONT | | | | REAR | |
|---|---|---|---|---|---|
| FD164G1396 | 1 | DF301RWS | SP004 | - | - |

| BRAND & MODEL MARCA Y MODELO | C.C. | YEAR | |
|---|---|---|---|
| **SUZUKI** | | | |
| RM 125 | 125 | 96 | 06 |
| RM 250 | 250 | 96 | 06 |
| **YAMAHA** | | | |
| YZ 125 | 125 | 08 | |
| YZ 125, WR | 125 | 01 | 07 |
| WR 250 F 4T | 250 | 03 | |
| YZ 250 | 250 | 08 | |
| YZ 250, WR | 250 | 01 | 02 |
| YZ 250 F, WR F 4T | 250 | 01 | 06 |
| YZ 250 F | 250 | 07 | 13 |
| WR 426 F | 425 | 00 | 02 |
| YZ 426 F | 425 | 00 | 02 |
| WR 450 F | 450 | 03 | |
| YZ 450 F | 450 | 03 | |

## KG349RWS

| FRONT | | | | REAR | |
|---|---|---|---|---|---|
| FD164G1396 | 1 | DF349RWS | SP005 | - | - |

| BRAND & MODEL MARCA Y MODELO | C.C. | YEAR | |
|---|---|---|---|
| **SUZUKI** | | | |
| RM 250 Z | 250 | 07 | |
| RM 450 Z | 450 | 05 | |
| RMX 450 Z | 450 | 10 | |

## KG606RWS

| FRONT | | | | REAR | |
|---|---|---|---|---|---|
| FD138G1396 | 1 | DF606RWS | SP041 | - | - |

| BRAND & MODEL MARCA Y MODELO | C.C. | YEAR | |
|---|---|---|---|
| **HUSABERG** | | | |
| 125 TE | 125 | 11 | |
| 250 TE | 250 | 11 | |
| 300 TE | 300 | 11 | |
| 350 FE | 350 | 13 | |
| 390 FE | 390 | 10 | |
| 450 FE | 450 | 12 | |
| 450 FX | 450 | 10 | |
| 501 FE | 501 | 13 | |
| 570 FE | 570 | 09 | |
| **HUSQVARNA** | | | |
| 125 TC | 125 | 14 | |
| 125 TE | 125 | 14 | |
| 250 FC | 250 | 14 | |
| 250 FE | 250 | 14 | |
| 250 TC | 250 | 14 | |
| 250 TE | 250 | 14 | |
| 300 TE | 300 | 14 | |
| 350 FC | 350 | 14 | |
| 350 FE | 350 | 14 | |
| 450 FE | 450 | 14 | |
| 450 FC | 450 | 14 | |
| 501 FE | 501 | 14 | |
| **KTM** | | | |
| 144 SX | 144 | 08 | |
| 150 XC | 150 | 10 | |
| 250 EXC F | 250 | 15 | |
| 250 SX F | 250 | 15 | |
| 300 EXC - E | 300 | 08 | |
| 350 ECX F | 350 | 12 | |
| 350 SX FACTORY | 350 | 10 | |
| 350 SX F | 350 | 11 | |
| 350 XC F | 350 | 11 | |
| 450 EXC - R | 450 | 08 | |
| 450 XC SIX DAYS | 450 | 10 | |
| 500 EXC | 500 | 14 | |
| 530 EXC - R | 530 | 08 | |
| 530 XC / W | 530 | 08 | |
| 530 XC SIX DAYS | 530 | 10 | |

# KITS OFF-ROAD FLOATING OVERSIZE FRONT DISC (DF FLS)

## KG014WFS

| FRONT | | | | REAR | |
|---|---|---|---|---|---|
| FD164G1396 | 1 | DF014FLS | SP001 | - | - |

| BRAND & MODEL MARCA Y MODELO | C.C. | YEAR | |
|---|---|---|---|
| **HM** | | | |
| CRE 125 R | 125 | 03 | |
| CRE 250 F | 250 | 03 | |
| CRE 250 R | 250 | 03 | |
| CRF 250 R | 250 | 09 | |
| CRE 250 X | 250 | 09 | |
| CRE 300 X | 300 | 09 | |
| CRE 450 F | 450 | 03 | |
| CRE 450 R | 450 | 09 | |
| CRF 450 R | 450 | 09 | |
| CRE 450 X | 450 | 09 | |
| CRE F 490 X | 490 | 07 | |
| CRE 500 X | 500 | 09 | |
| **HONDA** | | | |
| CR 125 R | 125 | 95 | 07 |
| CR 250 R | 250 | 95 | 07 |
| CRF 250 R | 250 | 04 | 14 |
| CRF 250 X | 250 | 04 | |
| CRF 250 XR LD | 250 | 13 | |
| CRF 450 F/R | 450 | 01 | 14 |
| CRF 450 X | 450 | 04 | |
| CRF 450 XR LD | 450 | 13 | |
| CR 500 R | 500 | 95 | 00 |

## KG082WFS

| FRONT | | | | REAR | |
|---|---|---|---|---|---|
| FD164G1396 | 1 | DF014FLS | SP045 | - | - |

| BRAND & MODEL MARCA Y MODELO | C.C. | YEAR | |
|---|---|---|---|
| **HONDA** | | | |
| CRF 250 R | 250 | 15 | |
| CRF 450 R | 450 | 15 | |

## KG200WFS

| FRONT | | | | REAR | |
|---|---|---|---|---|---|
| FD164G1396 | 1 | DF200FLS | SP005 | - | - |

| BRAND & MODEL MARCA Y MODELO | C.C. | YEAR | |
|---|---|---|---|
| **KAWASAKI** | | | |
| KX 125 | 125 | 06 | |
| KX 250 | 250 | 06 | |
| KX 250 F | 250 | 06 | 14 |
| KLX 450 R | 450 | 07 | |
| KX 450 F | 450 | 06 | 14 |
| KXE 450 F | 450 | 06 | |

## KG301WFS

| FRONT | | | | REAR | |
|---|---|---|---|---|---|
| FD164G1396 | 1 | DF301FLS | SP004 | - | - |

| BRAND & MODEL MARCA Y MODELO | C.C. | YEAR | |
|---|---|---|---|
| **SUZUKI** | | | |
| RM 125 | 125 | 96 | 06 |
| RM 250 | 250 | 96 | 06 |
| **YAMAHA** | | | |
| YZ 125 | 125 | 08 | |
| YZ 125, WR | 125 | 01 | 07 |
| WR 250 F 4T | 250 | 03 | |
| YZ 250 | 250 | 08 | |
| YZ 250, WR | 250 | 01 | 02 |
| YZ 250 F, WR F 4T | 250 | 01 | 06 |
| YZ 250 F | 250 | 07 | 13 |
| WR 426 F | 425 | 00 | 02 |
| YZ 426 F | 425 | 00 | 02 |
| WR 450 F | 450 | 03 | |
| YZ 450 F | 450 | 03 | |

## KG349WFS

| FRONT | | | | REAR | |
|---|---|---|---|---|---|
| FD164G1396 | 1 | DF349FLS | SP005 | - | - |

| BRAND & MODEL MARCA Y MODELO | C.C. | YEAR | |
|---|---|---|---|
| **SUZUKI** | | | |
| RM 250 Z | 250 | 07 | |
| RM 450 Z | 450 | 05 | |
| RMX 450 Z | 450 | 10 | |

## KG606WFS

| FRONT | | | | REAR | |
|---|---|---|---|---|---|
| FD138G1396 | 1 | DF606FLS | SP041 | - | - |

| BRAND & MODEL MARCA Y MODELO | C.C. | YEAR | |
|---|---|---|---|
| **HUSABERG** | | | |
| 125 TE | 125 | 11 | |
| 250 TE | 250 | 11 | |
| 300 TE | 300 | 11 | |
| 350 FE | 350 | 13 | |
| 390 FE | 390 | 10 | |
| 450 FE | 450 | 12 | |
| 450 FX | 450 | 10 | |
| 501 FE | 501 | 13 | |
| 570 FE | 570 | 09 | |
| **HUSQVARNA** | | | |
| 125 TC | 125 | 14 | |
| 125 TE | 125 | 14 | |
| 250 FC | 250 | 14 | |
| 250 FE | 250 | 14 | |
| 250 TC | 250 | 14 | |
| 250 TE | 250 | 14 | |
| 300 TE | 300 | 14 | |
| 350 FC | 350 | 14 | |
| 350 FE | 350 | 14 | |
| 450 FE | 450 | 14 | |
| 450 FC | 450 | 14 | |
| 501 FE | 501 | 14 | |
| **KTM** | | | |
| 144 SX | 144 | 08 | |
| 150 XC | 150 | 10 | |
| 250 EXC F | 250 | 15 | |
| 250 SX F | 250 | 15 | |
| 300 EXC - E | 300 | 08 | |
| 350 ECX F | 350 | 12 | |
| 350 SX FACTORY | 350 | 10 | |
| 350 SX F | 350 | 11 | |
| 350 XC F | 350 | 11 | |
| 450 EXC - R | 450 | 08 | |
| 450 XC SIX DAYS | 450 | 10 | |
| 500 EXC | 500 | 14 | |
| 530 EXC - R | 530 | 08 | |
| 530 XC / W | 530 | 08 | |
| 530 XC SIX DAYS | 530 | 10 | |

## KG677WFS

| FRONT | | | | REAR | |
|---|---|---|---|---|---|
| FD164G1396 | 1 | DF677FLS | SP027 | - | - |

| BRAND & MODEL MARCA Y MODELO | C.C. | YEAR | |
|---|---|---|---|
| **GAS GAS** | | | |
| EC 125 | 125 | 01 | 15 |
| EC 125 SIX DAYS | 125 | 11 | |
| HALLEY 125 | 125 | 09 | |
| MC 125 | 125 | 01 | |
| EC 200 | 200 | 01 | |
| EC 200 SIX DAYS | 200 | 11 | |
| EC 250 | 250 | 01 | |
| EC 250 E | 250 | 11 | |
| EC 250 F | 250 | 10 | |
| EC 250 FSE | 250 | 01 | |
| EC 250 RACING | 250 | 09 | |
| EC 250 SIX DAYS | 250 | 11 | |
| EC 250 YR | 250 | 12 | |
| MC 250 | 250 | 01 | |
| EC 300 | 300 | 01 | |
| EC 300 E | 300 | 11 | |
| EC 300 F | 300 | 15 | |
| EC 300 SIX DAYS | 300 | 11 | |
| EC 300 RACING | 300 | 09 | |
| EC 400 FSE | 400 | 01 | |
| PAMPERA 400 | 400 | 06 | |
| EC 450 F | 450 | 15 | |
| EC 450 FSE | 450 | 03 | |

# KITS OFF-ROAD FLOATING GROOVED OVERSIZE FRONT DISC (DF FRS)

## KG014RFS

| FRONT | | | | REAR | |
|---|---|---|---|---|---|
| FD164G1396 | 1 | DF014FRS | SP001 | - | - |

| BRAND & MODEL MARCA Y MODELO | C.C. | YEAR | |
|---|---|---|---|
| **HM** | | | |
| CRE 125 R | 125 | 03 | |
| CRE 250 F | 250 | 03 | |
| CRE 250 R | 250 | 03 | |
| CRF 250 R | 250 | 09 | |
| CRE 250 X | 250 | 09 | |
| CRE 300 X | 300 | 09 | |
| CRE 450 F | 450 | 03 | |
| CRE 450 R | 450 | 09 | |
| CRF 450 R | 450 | 09 | |
| CRE 450 X | 450 | 09 | |
| CRE F 490 X | 490 | 07 | |
| CRE 500 X | 500 | 09 | |
| **HONDA** | | | |
| CR 125 R | 125 | 95 | 07 |
| CR 250 R | 250 | 95 | 07 |
| CRF 250 R | 250 | 04 | 14 |
| CRF 250 X | 250 | 04 | |
| CRF 250 XR LD | 250 | 13 | |
| CRF 450 F/R | 450 | 01 | 14 |
| CRF 450 X | 450 | 04 | |
| CRF 450 XR LD | 450 | 13 | |
| CR 500 R | 500 | 95 | 00 |

## KG082RFS

| FRONT | | | | REAR | |
|---|---|---|---|---|---|
| FD164G1396 | 1 | DF014FRS | SP045 | - | - |

| BRAND & MODEL MARCA Y MODELO | C.C. | YEAR | |
|---|---|---|---|
| **HONDA** | | | |
| CRF 250 R | 250 | 15 | |
| CRF 450 R | 450 | 15 | |

## KG200RFS

| FRONT | | | | REAR | |
|---|---|---|---|---|---|
| FD164G1396 | 1 | DF200FRS | SP005 | - | - |

| BRAND & MODEL MARCA Y MODELO | C.C. | YEAR | |
|---|---|---|---|
| **KAWASAKI** | | | |
| KX 125 | 125 | 06 | |
| KX 250 | 250 | 06 | |
| KX 250 F | 250 | 06 | 14 |
| KLX 450 R | 450 | 07 | |
| KX 450 F | 450 | 06 | 14 |
| KXE 450 F | 450 | 06 | |

## KG301RFS

| FRONT | | | | REAR | |
|---|---|---|---|---|---|
| FD164G1396 | 1 | DF301FRS | SP004 | - | - |

| BRAND & MODEL MARCA Y MODELO | C.C. | YEAR | |
|---|---|---|---|
| **SUZUKI** | | | |
| RM 125 | 125 | 96 | 06 |
| RM 250 | 250 | 96 | 06 |
| **YAMAHA** | | | |
| YZ 125 | 125 | 08 | |
| YZ 125, WR | 125 | 01 | 07 |
| WR 250 F 4T | 250 | 03 | |
| YZ 250 | 250 | 08 | |
| YZ 250, WR | 250 | 01 | 02 |
| YZ 250 F, WR F 4T | 250 | 01 | 06 |
| YZ 250 F | 250 | 07 | 13 |
| WR 426 F | 425 | 00 | 02 |
| YZ 426 F | 425 | 00 | 02 |
| WR 450 F | 450 | 03 | |
| YZ 450 F | 450 | 03 | |

## KG349RFS

| FRONT | | | | REAR | |
|---|---|---|---|---|---|
| FD164G1396 | 1 | DF349FRS | SP005 | - | - |

| BRAND & MODEL MARCA Y MODELO | C.C. | YEAR | |
|---|---|---|---|
| **SUZUKI** | | | |
| RM 250 Z | 250 | 07 | |
| RM 450 Z | 450 | 05 | |
| RMX 450 Z | 450 | 10 | |

## KG606RFS

| FRONT | | | | REAR | |
|---|---|---|---|---|---|
| FD138G1396 | 1 | DF606FRS | SP041 | - | - |

| BRAND & MODEL MARCA Y MODELO | C.C. | YEAR | |
|---|---|---|---|
| **HUSABERG** | | | |
| 125 TE | 125 | 11 | |
| 250 TE | 250 | 11 | |
| 300 TE | 300 | 11 | |
| 350 FE | 350 | 13 | |
| 390 FE | 390 | 10 | |
| 450 FE | 450 | 12 | |
| 450 FX | 450 | 10 | |
| 501 FE | 501 | 13 | |
| 570 FE | 570 | 09 | |
| **HUSQVARNA** | | | |
| 125 TC | 125 | 14 | |
| 125 TE | 125 | 14 | |
| 250 FC | 250 | 14 | |
| 250 FE | 250 | 14 | |
| 250 TC | 250 | 14 | |
| 250 TE | 250 | 14 | |
| 300 TE | 300 | 14 | |
| 350 FC | 350 | 14 | |
| 350 FE | 350 | 14 | |
| 450 FE | 450 | 14 | |
| 450 FC | 450 | 14 | |
| 501 FE | 501 | 14 | |
| **KTM** | | | |
| 144 SX | 144 | 08 | |
| 150 XC | 150 | 10 | |
| 250 EXC F | 250 | 15 | |
| 250 SX F | 250 | 15 | |
| 300 EXC - E | 300 | 08 | |
| 350 ECX F | 350 | 12 | |
| 350 SX FACTORY | 350 | 10 | |
| 350 SX F | 350 | 11 | |
| 350 XC F | 350 | 11 | |
| 450 EXC - R | 450 | 08 | |
| 450 XC SIX DAYS | 450 | 10 | |
| 500 EXC | 500 | 14 | |
| 530 EXC - R | 530 | 08 | |
| 530 XC / W | 530 | 08 | |
| 530 XC SIX DAYS | 530 | 10 | |

## KG677RFS

| FRONT | | | | REAR | |
|---|---|---|---|---|---|
| FD164G1396 | 1 | DF677FRS | SP027 | - | - |

| BRAND & MODEL MARCA Y MODELO | C.C. | YEAR | |
|---|---|---|---|
| **GAS GAS** | | | |
| EC 125 | 125 | 01 | 15 |
| EC 125 SIX DAYS | 125 | 11 | |
| HALLEY 125 | 125 | 09 | |
| MC 125 | 125 | 01 | |
| EC 200 | 200 | 01 | |
| EC 200 SIX DAYS | 200 | 11 | |
| EC 250 | 250 | 01 | |
| EC 250 E | 250 | 11 | |
| EC 250 F | 250 | 10 | |
| EC 250 FSE | 250 | 01 | |
| EC 250 RACING | 250 | 09 | |
| EC 250 SIX DAYS | 250 | 11 | |
| EC 250 YR | 250 | 12 | |
| MC 250 | 250 | 01 | |
| EC 300 | 300 | 01 | |
| EC 300 E | 300 | 11 | |
| EC 300 F | 300 | 15 | |
| EC 300 SIX DAYS | 300 | 11 | |
| EC 300 RACING | 300 | 09 | |
| EC 400 FSE | 400 | 01 | |
| PAMPERA 400 | 400 | 06 | |
| EC 450 F | 450 | 15 | |
| EC 450 FSE | 450 | 03 | |

# KITS ROAD FRONT (ORIGINAL OR OVERSIZE FRONT DISC)

## KG006WFS

| FRONT | | | | REAR | |
|---|---|---|---|---|---|
| FD344G1375 | 1 | DF006W | SP035 | - | - |

| BRAND & MODEL MARCA Y MODELO | C.C. | YEAR | |
|---|---|---|---|
| **HONDA** | | | |
| SH SCOOPY 300 | 300 | 07 | |
| SH SCOOPY 300 ABS | 300 | 07 | |

## KG007WFS

| FRONT | | | | REAR | |
|---|---|---|---|---|---|
| FD344G1380 | 1 | DF007WS | SP035 | - | - |

| BRAND & MODEL MARCA Y MODELO | C.C. | YEAR | |
|---|---|---|---|
| **HONDA** | | | |
| SH 125 i SCOOPY (D-D) | 125 | 09 | 12 |
| SH 125 i SCOOPY ABS | 125 | 13 | |
| SH 150 i SCOOPY (D-D) | 150 | 09 | |
| SH 150 i SCOOPY ABS | 150 | 13 | |
| FAZE 250 | 250 | 10 | |
| FES 250 FORZA EX | 250 | 05 | |
| FES 250 FORZA X / Z | 250 | 05 | |
| NSS 300 FORZA | 300 | 13 | |

## KG071WFS

| FRONT | | | | REAR | |
|---|---|---|---|---|---|
| FD284G1380 | 1 | DF071WS | SP025 | - | - |

| BRAND & MODEL MARCA Y MODELO | C.C. | YEAR | |
|---|---|---|---|
| **HONDA** | | | |
| @ 125 | 125 | 00 | |
| DYLAN 125 | 125 | 02 | |
| PS 125i | 125 | 06 | |
| SH 125 SCOOPY | 125 | 01 | 04 |
| SH 125 i SCOOPY | 125 | 05 | 08 |
| SH 125 i SCOOPY (TAMBOR TRAS) | 125 | 09 | 12 |
| @ 150 | 150 | 00 | |
| DYLAN 150 | 150 | 02 | |
| PS 150i | 150 | 06 | |
| SH 150 SCOOPY | 150 | 01 | 04 |
| SH 150 i SCOOPY | 150 | 05 | |
| SH 150 i SCOOPY (TAMBOR TRAS) | 150 | 09 | |

## KG078WF

| FRONT | | | | REAR | |
|---|---|---|---|---|---|
| FD439G1383 | 1 | DF078W | - | - | - |

| BRAND & MODEL MARCA Y MODELO | C.C. | YEAR | |
|---|---|---|---|
| **HONDA** | | | |
| NSC 50 AC | 50 | 13 | |
| NSC 50 C | 50 | 13 | |
| NSC 50 R | 50 | 13 | |
| VISION 50 | 50 | 12 | |
| VISION 110 AC | 110 | 11 | |
| VISION 110 WHB | 110 | 11 | |
| PCX 125 | 125 | 10 | |
| SH 125 MODE | 125 | 13 | |
| PCX 150 | 150 | 13 | |

## KG083WF

| FRONT | | | | REAR | |
|---|---|---|---|---|---|
| FD344G1054 | 1 | DF083W | - | - | - |

| BRAND & MODEL MARCA Y MODELO | C.C. | YEAR | |
|---|---|---|---|
| **HONDA** | | | |
| SH SCOOPY 300 | 300 | 07 | |
| SH SCOOPY 300 ABS | 300 | 07 | |

## KG473WFS

| FRONT | | | | REAR | |
|---|---|---|---|---|---|
| FD153G1054 | 1 | DF473WS | SP009 | - | - |

| BRAND & MODEL MARCA Y MODELO | C.C. | YEAR | |
|---|---|---|---|
| **MBK MOTOBEKANE** | | | |
| BOOSTER NAKED | 50 | 06 | |
| BOOSTER WHEEL 12" | 50 | 06 | |
| **YAMAHA** | | | |
| BW'S NAKED | 50 | 06 | |
| BW'S WHEEL12" | 50 | 06 | |

## KG7022F

| FRONT | | | | REAR | |
|---|---|---|---|---|---|
| FD271G1375 | 2 | DF702W | - | - | - |

| BRAND & MODEL MARCA Y MODELO | C.C. | YEAR | |
|---|---|---|---|
| **BMW** | | | |
| R 1150 GS | 1150 | 02 | |
| R 1200 GS | 1200 | 04 | 08 |
| R 1200 GS | 1200 | 09 | |
| R 1200 GS ADVENTURE | 1200 | 06 | 08 |
| R 1200 GS ADVENTURE | 1200 | 09 | |

# KITS ROAD FRONT & REAR (ORIGINAL OR OVERSIZE FRONT DISC)

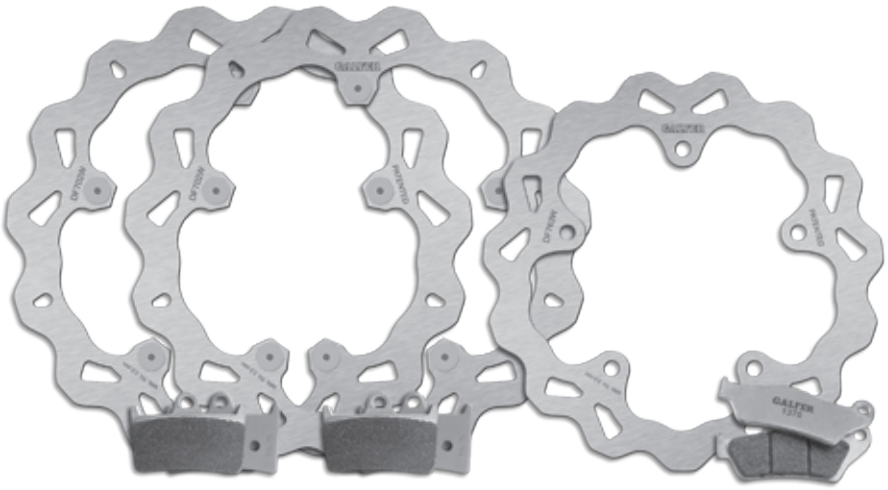

## KG0062FS

| FRONT | | | | REAR | |
|---|---|---|---|---|---|
| FD344G1375 | 1 | DF006W | SP035 | FD345G1054 | DF083W |

| BRAND & MODEL MARCA Y MODELO | C.C. | YEAR | |
|---|---|---|---|
| **HONDA** | | | |
| SH SCOOPY 300 | 300 | 07 | |
| SH SCOOPY 300 ABS | 300 | 07 | |

## KG0072FS

| FRONT | | | | REAR | |
|---|---|---|---|---|---|
| FD344G1380 | 1 | DF007WS | - | FD345G1054 | DF007W |

| BRAND & MODEL MARCA Y MODELO | C.C. | YEAR | |
|---|---|---|---|
| **HONDA** | | | |
| SH 125 i SCOOPY (D-D) | 125 | 09 | 12 |
| SH 125 i SCOOPY ABS | 125 | 13 | |
| SH 150 i SCOOPY (D-D) | 150 | 09 | |
| SH 150 i SCOOPY ABS | 150 | 13 | |
| FAZE 250 | 250 | 10 | |
| FES 250 FORZA EX | 250 | 05 | |
| FES 250 FORZA X / Z | 250 | 05 | |
| NSS 300 FORZA | 300 | 13 | |

## KG4743FS

| FRONT | | | | REAR | |
|---|---|---|---|---|---|
| FD178G1375 | 2 | DF474CWR | SP033I/D | FD352G1380 | DF494W |

| BRAND & MODEL MARCA Y MODELO | C.C. | YEAR | |
|---|---|---|---|
| **YAMAHA** | | | |
| XP 500 T-MAX | 500 | 08 | |
| XP 500 T-MAX ABS | 500 | 08 | |
| YZF 1.000 R-1 | 1000 | 02 | 03 |

## KG4953FS

| FRONT | | | | REAR | |
|---|---|---|---|---|---|
| FD178G1375 | 2 | DF495CWR | SP033I/D | FD260G1380 | DF528W |

| BRAND & MODEL MARCA Y MODELO | C.C. | YEAR | |
|---|---|---|---|
| **YAMAHA** | | | |
| XP 530 T-MAX | 530 | 12 | 14 |
| XP 530 T-MAX ABS | 530 | 12 | 14 |

## KG495BFS

| FRONT | | | | REAR | |
|---|---|---|---|---|---|
| FD178G1375 | 2 | DF495CWR | SP475 | FD260G1380 | DF528W |

| BRAND & MODEL MARCA Y MODELO | C.C. | YEAR | |
|---|---|---|---|
| **YAMAHA** | | | |
| XP 530 T-MAX | 530 | 15 | |
| XP 530 T-MAX ABS | 530 | 15 | |

## KG500WF

| FRONT | | | | REAR | |
|---|---|---|---|---|---|
| FD266G1380 | 1 | DF500W | - | FD214G1380 | DF524W |

| BRAND & MODEL MARCA Y MODELO | C.C. | YEAR | |
|---|---|---|---|
| **MBK MOTOBEKANE** | | | |
| SKYCRUISER | 125 | 06 | 09 |
| **YAMAHA** | | | |
| X - MAX 125 | 125 | 10 | |
| X - MAX 125 ABS | 125 | 10 | |
| X - MAX 250 | 250 | 10 | |

## KG5033F

| FRONT | | | | REAR | |
|---|---|---|---|---|---|
| FD169G1380 | 2 | DF503FLW | - | FD352G1380 | DF494W |

| BRAND & MODEL MARCA Y MODELO | C.C. | YEAR | |
|---|---|---|---|
| **YAMAHA** | | | |
| XP 500 T-MAX | 500 | 04 | 07 |
| XP 500 T-MAX ABS | 500 | 04 | 07 |
| XP 500 T-MAX BLACK MAX | 500 | 06 | 07 |

## KG5033FLW

| FRONT | | | | REAR | |
|---|---|---|---|---|---|
| FD266G1054 | 2 | DF503FLW | - | FD474G1380 | DF501W |

| BRAND & MODEL MARCA Y MODELO | C.C. | YEAR | |
|---|---|---|---|
| **YAMAHA** | | | |
| X - MAX 400 | 400 | 13 | |

## KG503CF

| FRONT | | | | REAR | |
|---|---|---|---|---|---|
| FD178G1370 | 2 | DF503FLW | - | FD260G1380 | DF528W |

| BRAND & MODEL MARCA Y MODELO | C.C. | YEAR | |
|---|---|---|---|
| **YAMAHA** | | | |
| XP 530 T-MAX | 530 | 12 | |
| XP 530 T-MAX ABS | 530 | 12 | |

## KG5262F

| FRONT | | | | REAR | |
|---|---|---|---|---|---|
| FD138G1054 | 1 | DF526W | - | FD336G1054 | DF527W |

| BRAND & MODEL MARCA Y MODELO | C.C. | YEAR | |
|---|---|---|---|
| **YAMAHA** | | | |
| YZF 125 R | 125 | 08 | |

## KG7023F

| FRONT | | | | REAR | |
|---|---|---|---|---|---|
| FD271G1375 | 2 | DF702W | - | FD186G1371 | DF763W |

| BRAND & MODEL MARCA Y MODELO | C.C. | YEAR | |
|---|---|---|---|
| **BMW** | | | |
| R 1150 GS | 1150 | 02 | |
| R 1200 GS | 1200 | 04 | 08 |
| R 1200 GS | 1200 | 09 | |
| R 1200 GS ADVENTURE | 1200 | 06 | 08 |
| R 1200 GS ADVENTURE | 1200 | 09 | |

## KG8163F

| FRONT | | | | REAR | |
|---|---|---|---|---|---|
| FD266G1054 | 2 | DF816FLW | - | FD266G1054 | DF816W |

| BRAND & MODEL MARCA Y MODELO | C.C. | YEAR | |
|---|---|---|---|
| **BMW** | | | |
| C 600 SPORT | 600 | 12 | |
| C 650 GT | 650 | 12 | |

# GALFER
PERFORMANCE BRAKING SYSTEMS

## JUSTIN BARCIA
YAMAHA 450 AMA SX

GALFER MOTO

# SAME SHAPE PADS DIFFERENT THICKNESS

# PASTILLAS MISMA FORMA DIFERENTE ESPESOR

## PASTIGLIE STESSA FORMA SPESSORE DIVERSO

## PLAQUETTES MÊME FORME ÉPAISSEUR DIFFÉRENTE

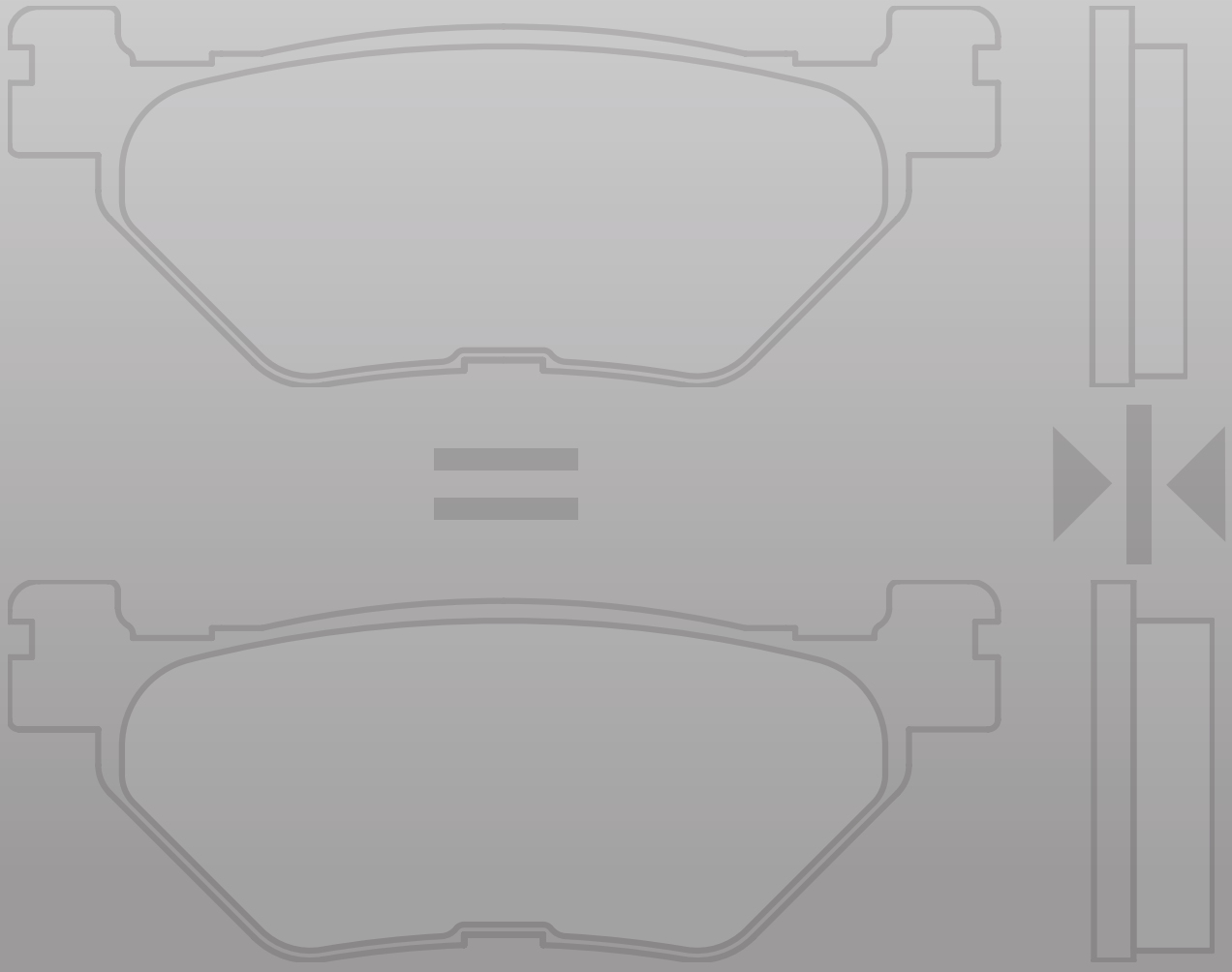

| GALFER ref. | Thickness mm. | = GALFER ref. | Thickness mm. | = GALFER ref. | Thickness mm. | = GALFER ref. | Thickness mm. |
|---|---|---|---|---|---|---|---|
| **FD012** | 7,00 | **FD170** | 7,30 | **FD190** | 9,30 | | |
| **FD045** | 9,00 | **FD111** | 8,60 | | | | |
| **FD063** | 7,20 | **FD284** | 9,30 | | | | |
| **FD070** | 9,50 | **FD209** | 7,00 | | | | |
| **FD076** | 7,80 | **FD299** | 6,50 | | | | |
| **FD086** | 7,7 /7,5 | **FD187** | 9,00 | | | | |
| **FD093** | 10,00 | **FD147** | 7,00 | **FD144** | 8,90 | | |
| **FD100** | 9,00 | **FD148** | 8,50 | | | | |
| **FD103** | 10,60 | **FD457** | 9,00 | | | | |
| **FD111** | 8,60 | **FD045** | 9,00 | | | | |
| **FD117** | 7,50 | **FD145** | 9,20 | | | | |
| **FD138** | 7,60 | **FD186** | 8,5 /10,1 | | | | |
| **FD140** | 9,80 | **FD266** | 8,30 | | | | |
| **FD144** | 8,90 | **FD093** | 10,00 | **FD147** | 7,00 | | |
| **FD145** | 9,20 | **FD117** | 7,50 | | | | |
| **FD147** | 7,00 | **FD144** | 8,90 | **FD093** | 10,00 | | |
| **FD148** | 8,50 | **FD100** | 9,00 | | | | |
| **FD168** | 8,40 | **FD208** | 10,00 | | | | |
| **FD170** | 7,30 | **FD012** | 7,00 | **FD190** | 9,30 | | |
| **FD186** | 8,5 /10,1 | **FD138** | 7,60 | | | | |
| **FD187** | 9,00 | **FD086** | 7,7/7,5 | | | | |
| **FD190** | 9,30 | **FD012** | 7,00 | **FD170** | 7,30 | | |
| **FD193** | 9,50 | **FD384** | 8,00 | | | | |
| **FD205** | 8,30 | **FD207** | 9,40 | | | | |
| **FD207** | 9,40 | **FD205** | 8,30 | | | | |
| **FD208** | 10,00 | **FD168** | 8,40 | | | | |
| **FD209** | 7,00 | **FD070** | 9,50 | | | | |
| **FD235** | 7,50 | **FD375** | 8,00 | | | | |
| **FD266** | 8,30 | **FD140** | 9,80 | | | | |
| **FD284** | 9,30 | **FD063** | 7,20 | | | | |
| **FD299** | 6,50 | **FD076** | 7,80 | | | | |
| **FD384** | 8,00 | **FD193** | 9,50 | | | | |
| **FD375** | 8,00 | **FD238** | 7,50 | | | | |
| **FD457** | 9,00 | **FD103** | 10,60 | | | | |

GALFER MOTO

# PADS CROSS REF.
# CRUCE REF. PASTILLAS
## COMPARATIVA COD. PASTIGLIE
## CORRESPONDANCES RÉF. PLAQUETTES

GALFER
AP RACING
BRAKING
brembo
GROUPE CARBONE LORRAINE
DELTA
DUNLOP
EBC BRAKES
FERODO
GOLDfren
GRIMECA
Lucas
NISSIN
sbs SCANDINAVIAN BRAKE SYSTEMS
SEMC
Vesrah

# BRAKE PADS CROSS • CRUCE REFERENCIAS PASTILLAS

## COMPARATIVA CODICI PASTIGLIE • CORRESPONDANCES RÉFÉRENCES PLAQUETTES

GALFER MOTO

| GALFER | AP Racing | BRAKING | brembo | GROUPE CARBONE LORRAINE general | GROUPE CARBONE LORRAINE scooter | DELTA | DUNLOP | EBC | FERODO | GOLD FREN | GRIMECA | Lucas | NISSIN | PREMIER | sbs | sbs 100 | Vesrah |
|---|---|---|---|---|---|---|---|---|---|---|---|---|---|---|---|---|---|
| FD012 | 119 | 612 | 07BB0110 | 2249 | | 2010 | 601 | 47 | 207 | 038 | 1001 | 75 | 12 | 282 | 8 | 519 | 138 | 911 |
| FD013 | 106 | 613 | 07BB1410 | 2332 | | 2034 | 600 | 18 | 108 | 081 | 1002 | 19 | 13 | | 1 | 506 | | 907 |
| FD016 | 108 | 616 | 07HO0307 | 2814 | | 2099 | 101 | 31 | 182 | 001 | 1003 | 62 | 16 | 221 | 3 | 508 | | 112 |
| FD017 | 107 | 617 | 07YA0309 | 2847 | | 2182 | 401 | 34 | 177 | 082 | 1004 | 68 | 17 | 232 | 5 | 507 | | 205 |
| FD022 | 112 | 622 | 07KS0207 | 2258 | | 2146 | 203 | 36 | 151 | 076 | 1005 | 73 | 22 | 235 | 6 | 512 | | |
| FD028 | 160 | | 07GR0204 | | | 2098 | 917 | 76 | 205 | 184 | | 536 | 28 | | 140 | 560 | | 928 |
| FD031 | 132 | | 07GR0101 | | | 2122 | | 50 | 213 | 159 | | 508 | 31 | | 139 | 532 | | 912 |
| FD036 | 120 | | 07GR5915 | | | | | 22 | 155 | | | 17 | 36 | | 78 | 520 | | 910 |
| FD037 | | | 07GR5915 | | | 2510 | 843 | 155 | | | | | 37 | | 108 | | | |
| FD042 | 225 | | | | | | | | | | 1010 | 596 | 42 | | | 625 | | 926 |
| FD044 | 154 | 644 | 07BB2307 | 2840 | | | 620 | 77 | 204 | 197 | 1011 | 533 | 44 | | 86 | 554 | | 933 |
| FD045 | 126 | 645 | 07HO0712 | 2282 | | 2035 | 207 | 63 | 183 | 016 | 1012 | 55 | 45 | | 12 | 526 | | 327 |
| FD046 | 133 | 646 | 07SU0312 | 2694 | | 2101 | 205 | 51 | 218 | 075 | 1013 | 509 | 46 | | 10 | 533 | | 322 |
| FD047 | 134 | 647 | 07SU0412 | | | 2040 | 206 | 65 | 217 | 138 | 1014 | 501 | 47 | 238 | 13 | 534 | | 324 |
| FD048 | 174 | 648 | 07BB1305 | 1089 | 3037 | 2030 | 611 | 60 | 694 | 096 | 1015 | 552 | 48 | 157 | 149/154 | 574 | 106 | 920 |
| FD051 | 147 | 651 | 07YA0809 | 2807 | | 2054 | 402 | 70 | 277 | 151 | 1016 | 521 | 51 | | 20 | 547 | | 228 |
| FD052 | 140 | 652 | 07KA0506 | | | 2034 | 309 | 68 | 298 | 127 | 1017 | 516 | 52 | | 14 | 540 | | 420 |
| FD054 | 142 | 654 | 07HO1010 | 2289 | 3011 | 2036 | 105 | 69 | 244 | 012 | 1018 | 512 | 54 | 201 | 17/99 | 542 | 160 | 123 |
| FD056 | 150 | 658 | 07YA1011 | 2802 | | 2167 | 403 | 81 | 311 | 113 | 1019 | 524 | 62 | 230 | 21 | 550 | | 235 |
| FD057 | 155 | 661 | 07YA1107 | 2283 | | 2055 | 404 | 88 | 337 | 015 | 1020 | 530 | 68 | 207 | 28 | 555 | | 236 |
| FD060 | 152 | 656 | 07HO1406 | | | 2052 | 106 | 80 | 310 | | 1021 | 526 | 56 | 222 | 82 | 552 | | 129 |
| FD062 | 157 | 662 | 07KA0808 | 2285 | | 2062 | 311 | 85 | 339 | 037 | 1022 | 532 | 72 | 241 | 26 | 557 | | 426 |
| FD063 | 158 | 667 | 07HO1505 | 2451 | 3019 | 2080 | 114 | 92 | 382 | 102 | 1023 | 534 | 67 | 223 | 29 | 558 | 104 | 134 |
| FD065 | 159 | 621 | 73132 | 2377 | 3015 | 2120 | 607 | 115 | 405 | 008 | 1024 | 535 | 94 | 288 | 88 | 559 | 105 | 925 |
| FD066 | 177 | 680 | 07SU0607 | | | 2113 | 210 | 103 | 389 | 085 | 1025 | 542 | 60 | 234 | 32 | 577 | | 331 |
| FD067 | 145 | | 07YA0713 | | | | | 41 | 184 | | | | | | 64 | 545 | | 215 |
| FD068 | 166 | 688 | 7442645 | 2247 | | 2650 | 614 | 95 | 408 | 064 | 1026 | 540 | 93 | 247 | 66 | 566 | | 945 |
| FD069 | 170 | 679 | 07YA1207 | 2301 | | 2037 | 407 | 104 | 386 | 067 | 1027 | 541 | 82 | 209 | 33 | 570 | | 240 |
| FD070 | 182 | 681 | 07SU0808 | 2386 | | 2110 | 209 | 106 | 673 | 046 | 1028 | 550 | 95 | | 35 | 582 | | 329 |
| FD071 | 195 | 671 | 07GR0501 | | 3034 | 2760 | 602 | 99 | 436 | 120 | 1029 | 564 | 74 | 150 | 94 | 595 | 132 | 932 |
| FD072 | 196 | 683 | 07YA1809 | 2393 | | 2130 | | 118 | 583 | 029 | 1030 | 568 | 97 | | 89 | 596 | | 245 |
| FD073 | 151 | 673 | 07HO1304 | 2621 | | 2480 | 111 | 86 | 312 | 011 | 1031 | 525 | 75 | 205 | 27 | 551 | 103 | 131 |
| FD074 | 188 | 684 | 07GR0305 | 2794 | | 2710 | 108 | 113 | 438 | 010 | 1032 | 557 | 91 | 224 | 37 | 588 | 108 | 152 |
| FD075 | 146 | 669 | 07KS0432 | 2306 | 3012 | 2050 | 310 | 67 | 314 | 005 | 1033 | 523 | 73 | 236 | 75 | 546 | 135 | 425 |
| FD076 | 192 | 686 | 07HO2006 | 2328 | | 2070 | 811 | 84 | 381 | 007 | 1034 | 561 | 78 | 283 | 24 | 592 | | 127 |
| FD077 | 128 | | 07YA0413 | | | | | 61 | 247 | | | 520 | | | 65 | 528 | | 216 |
| FD078 | 220 | 678 | 07SU1306 | 2280 | | 2113 | 210 | 103 | 569 | 085 | 1035 | 542 | 83 | 239 | 51 | 620 | | 331 |
| FD079 | 175 | 685 | 07YA1407 | 2284 | 3008 | 2090 | 406 | 101 | 383 | 018 | 1036 | 539 | 124 | 229 | 31 | 575 | 107 | 239 |
| FD080 | 180 | 687 | 07YA1305 | 2792 | | 2100 | 405 | 105 | 411 | 043 | 1037 | 549 | 89 | | 34 | 580 | | 241 |
| FD081 | 187 | 689 | 07SU1005 | | | 2123 | | 110 | 437 | 074 | 1038 | 541 | 100 | | 36 | 587 | | 335 |
| FD082 | 200/247 | 690 | 07HO3509 | 2310 | 3066 | 2072 | 109 | 124 | 452 | 024 | 1039 | 571 | 105 | 220 | 40 | 600/647 | | 143 |
| FD083 | 178 | 691 | 07SU0707 | | | | | 102 | 390 | 085 | 1040 | 547 | 119 | 240 | 84 | 578 | | 328 |
| FD084 | 207 | 694 | 07GR0601 | 2260 | | 2660 | 610 | 116 | 697 | 115 | 1041 | 578 | 98 | 151 | 90 | 607 | 109 | 937 |
| FD085 | 201 | 695 | 07GR5605 | 2398 | | 2150 | 604 | 126 | 498 | 019 | 1042 | 572 | | | 119 | 601 | | 943 |
| FD086 | 211 | 696 | 07SU1215 | 2288 | 3087 | 2200 | 411 | 135 | 497 | 002 | 1043 | 582 | 122 | 211 | 46 | 611 | 197 | 250 |
| FD087 | 190/213 | 692 | 07YA1711 | 2253 | | 2056 | 409 | 123 | 449 | 073 | 1044 | 559 | 177 | 228 | 39 | 590/613 | | 242 |
| FD089 | 208 | 697 | 07BB0907 | 2400 | | 2190 | 605 | 134 | 499 | 006 | 1045 | 579 | 113 | | 113 | 608 | | 942 |
| FD090 | 197 | 698 | 07KA0933 | 2304 | | 2720 | 314 | 129 | 481 | 013 | 1046 | 569 | 108 | 252 | 107/43 | 597 | | 427 |
| FD091 | 202 | 699 | 07KA1016 | | | 2160 | 313 | 130 | 494 | 035 | 1047 | 573 | 116 | | 44 | 602 | | 428 |
| FD092 | 203 | 700 | 07HO2506 | 2302 | | 2230 | 814 | 125 | 495 | 004 | 1048 | 574 | 120 | 215 | 42/126 | 603 | 139 | 139 |
| FD093 | 204 | 701 | 07HO2608 | 2314 | | 2170 | 815 | 131 | 539 | 003 | 1049 | 575 | 114 | 219 | 45/179 | 604 | 144 | 144 |
| FD094 | 144 | 702 | 07KA0717 | 2469 | 3022 | 2060 | 312 | 83 | 313 | 042 | 1050 | 522 | 85 | 237 | 22 | 544 | 101 | 342 |
| FD095 | 136 | 703 | 07HO0906 | 2408 | 3018 | 2020 | 107 | 54 | 250 | 144 | 1051 | 510 | 80 | 206 | 11 | 536 | 100 | 120 |
| FD096 | 193 | 704 | 07HO2107 | 2252 | | 2059 | 110 | 203 | 462 | 025 | 1052 | 562 | 106 | 216 | 38/100 | 593 | | 142 |
| FD097 | 189 | 705 | 07YA1605 | 2424 | | 2140 | 408 | 119 | 2015 | 034 | 1053 | 558 | 102 | | 163 | 589 | 136 | 244 |
| FD098 | 194 | 706 | 07BB0606 | 2801 | | | | 120 | 592 | 101 | 1054 | 563 | 96 | | 146 | 594 | | 924 |
| FD099 | 224 | 707 | 07SU1407 | 2246 | | 2068 | 213 | 145 | 557 | 017 | 1055 | 595 | 129 | 208/253 | 50 | 624 | | 343 |
| FD100 | 222 | 708 | 07HO2807 | 2245 | | 2039 | 112 | 144 | 533 | 069 | 1056 | 593 | | 203 | 62 | 622 | | 154 |
| FD101 | 226 | 709 | 07SU1509 | 2308 | | 2740 | 214 | 147 | 606 | 036 | 1057 | 597 | 140 | | 67 | 626 | | 347 |
| FD102 | 236 | 710 | 07GR5705 | | | 2430 | 609 | 164 | | 180 | 1058 | 613 | 159 | | 141 | 636 | | 938 |
| FD103 | 214 | 711 | 07HO2711 | 2298 | 3076 | 2770 | 115 | 140 | 531 | 020 | 1059 | 585 | 136 | 204 | 61 | 614 | 161 | 147 |
| FD104 | 215 | 712 | 07KA1117 | 2389 | | 2063 | 316 | 141 | 508 | 044 | 1060 | 586 | 138 | 280 | 60 | 615 | | 430 |
| FD107 | 231 | 715 | 07KA1306 | 2251 | | 2680 | 317 | 158 | 574 | 032 | 1061 | 602 | 143 | 214 | 53 | 631 | | 344 |
| FD108 | 227 | 716 | 07HO3005 | 2256 | 3003 | 2038 | 117 | 142 | 570 | 022 | 1062 | 598 | 132 | 202 | 47 | 627 | 183 | 156 |
| FD109 | 220 | 717 | 07SU1306 | 2281 | | 2076 | 212 | 150 | 569 | 027 | 1063 | 591 | 147 | 239 | 51 | 620 | | 345 |
| FD110 | 223 | 718 | 07HO2911 | 2385 | | 2350 | 113 | 143 | 496 | 052 | 1064 | 594 | 141 | 217 | 49 | 623 | | 139 |
| FD111 | 156 | 719 | 07KS0507 | 2282 | | 2073 | 318 | 161 | 338 | 016 | 1065 | 531 | 60 | 213 | 54/12 | 556 | | 937 |
| FD112 | 230 | 720 | 07HO4108 | 3003 | | 2079 | 118 | 196 | 664 | 014 | 1066 | 599 | 130 | 281 | 48 | 630 | | 156 |
| FD113 | 218 | 721 | 07HO3707 | 2287 | 3009 | 2078 | 119 | 151 | 2192 | 161 | 1067 | 589 | 139 | | 120 | 618 | 110 | 150 |
| FD114 | 248 | 722 | 07KA1207 | 2299 | | 2210 | 315 | 152 | 659 | 001 | 1068 | 625 | 144 | 227 | 52 | 648 | | 432 |
| FD115 | 229 | | 07HO4607 | | | 2510 | 120 | 153 | 568 | | 1069 | 601 | 137 | 218 | 134 | 629 | | 153 |
| FD116 | 206 | | | | | | | 74 | 695 | | 1070 | 577 | | | | 606 | | 931 |
| FD117 | 238 | 725 | 07YA2008 | 2326 | 3036 | 2340 | 412 | 165 | 631 | 009 | 1071 | 615 | 163 | 212 | 55 | 638 | 134 | 340 |
| FD118 | 201 | 726 | 07GR5605 | 2398 | | 2150 | 604 | 126 | 498 | 019 | 1072 | 572 | 115 | | 119 | 601 | | 943 |
| FD119 | 241 | 727 | 07BB1606 | | | 2640 | 618 | 163 | 529 | 089 | 1073 | 618 | 158 | | 127 | 641 | | 929 |
| FD120 | 235 | 728 | 07SU1718 | 2388 | | 2061 | 215 | 157 | 607 | 065 | 1074 | 612 | 164 | | 97 | 635 | | 348 |

| GALFER | AP Racing | BRAKING | brembo | GROUPE CARBONE LORRAINE general | GROUPE CARBONE LORRAINE scooter | DELTA | DUNLOP | EBC | FERODO | GOLD FREN | GRIMECA | Lucas | TRW | NISSIN | PREMIER | sbs | sbs 100 | Vesrah |
|---|---|---|---|---|---|---|---|---|---|---|---|---|---|---|---|---|---|---|
| FD121 | 245 | 729 | 07YA2409 | 2311 | | 2089 | 410 | 160 | 666 | 028 | 1075 | 622 | 176 | | 115 | 645 | | 251 |
| FD124 | 179 | 732 | 07HD0614 | 2699 | | 2116 | 900 | 94 | 352 | 057 | 1078 | 548 | 157 | | 74 | 579 | | 919 |
| FD125 | 268 | 733 | 07HD0910 | 2342 | | 2151 | 904 | 201 | 485 | 063 | 1079 | 580 | 149 | | 68/157 | 668 | | 922 |
| FD126 | 269 | 734 | 07HD1011 | 2370 | | 2149 | 905 | 200 | 2001 | 056 | 1080 | 583 | 150 | | 156/69 | 669 | | 923 |
| FD127 | 216 | 735 | 07YA1909 | 2392 | | 2175 | 417 | 136 | 591 | 322 | 1081 | 587 | 135 | | 96 | 616 | | 246 |
| FD128 | 221 | 736 | 07GR6407 | 2399 | | 2180 | 606 | 132 | 561 | 026 | 1082 | 592 | 126 | | 111 | 621 | | 936 |
| FD129 | 250 | 737 | 07YA2508 | 2360 | | 2690 | 413 | 172 | 737 | 033 | 1083 | 627 | 167 | 231 | 58 | 650 | 137 | 252 |
| FD130 | 198 | 738 | 07HO2408 | | | 2109 | | 122 | | 149 | 1084 | 570 | 109 | | 95 | 598 | | 146 |
| FD131 | 244 | 739 | 07BB2207 | | | | 615 | 170 | 657 | 117 | 1085 | 680 | 168 | | 142 | 644 | | 941 |
| FD132 | 281 | 740 | 07GR2106 | | | 2085 | | 177 | 782 | 105 | 1086 | 652 | 171 | | 147 | 681 | | 982 |
| FD133 | 252 | 741 | 07GR1406 | 1144 | 3069 | 2700 | 613 | 167 | 167 | 095 | 1087 | 629 | 162 | 171 | 138 | 652 | 148 | 9007 |
| FD134 | 257 | 742 | 07HO3607 | 2296 | 3079 | 2790 | 121 | 174 | 754 | 021 | 1088 | 634 | 172 | 244 | 59 | 657 | 162 | 163 |
| FD135 | 284 | 743 | 07GR0416 | 2472 | | 2610 | 310 | 173 | 828 | 084 | 1089 | 523 | 165 | | 16 | 684 | 118 | 425 |
| FD136 | 219 | 744 | 07YA3006 | 2696 | 3029 | 2012 | 417 | 169 | 636 | 114 | 1090 | 590 | 175 | 278 | 117 | 619 | 111 | 247 |
| FD137 | 240 | 745 | 07BB2107 | 2332 | | 2108 | 608 | 171 | 736 | 072 | 1091 | 617 | 169 | | 57 | 640 | | 934 |
| FD138 | 271 | 746 | 07BB0410 | 2352 | 3028 | 2220 | 617 | 181 | 2018 | 031 | 1092 | 648 | 186 | 274 | 114 | 671 | 151 | 947 |
| FD140 | 254 | 748 | 07HO3405 | 2313 | 3059 | 2079 | 316 | 196 | 851 | 014 | 1093 | 586 | 184 | 281 | 60 | 654 | 181 | 156 |
| FD141 | 266 | 749 | 07KA1406 | 2363 | | 2064 | 319 | 180 | 741 | 090 | 1094 | 643 | 185 | | 101 | 666 | | 433 |
| FD142 | 263 | 750 | 07YA2709 | 2391 | 3058 | 2058 | 414 | 179 | 781 | 048 | 1095 | 640 | 183 | 233 | 105 | 663 | 170 | 255 |
| FD143 | 265 | 751 | 07YA2609 | 2309 | | 2053 | 415 | 182 | 637 | 045 | 1096 | 622 | 191 | 251 | 116 | 665 | | 257 |
| FD144 | 290 | 701 | 07011 | | 3014 | 2170 | 815 | 131 | 672 | 003 | 1097 | 575 | 192 | | 45 | 690 | 121 | 144 |
| FD145 | 288 | 696 | 07033 | 3036 | 3062 | 2340 | 412 | 197 | 631 | 332 | 1098 | 663 | 208 | 272 | 207 | 688 | 119 | 250 |
| FD146 | 253 | | | | | 2700 | 612 | 166 | 699 | | | | | | 110 | 653 | | |
| FD147 | 273 | 755 | 07010 | | 3006 | 2170 | 621 | 131 | 783 | 071 | 1099 | 665 | 178 | | 131 | 673 | 116 | 144 |
| FD148 | 222 | 756 | 07HO2807 | 2245 | | 2039 | 112 | 187 | 533 | 069 | 1100 | 593 | 131 | 203 | 62 | 622 | | 343 |
| FD149 | 270 | 757 | 07HO3807 | 2408 | 3038 | 2027 | 903 | 257 | 625 | 110 | 1101 | 643 | 173 | 246 | 148 | 670 | 115 | 162 |
| FD151 | 272 | 759 | 07GR1705 | | | 2420 | | 156 | 866 | 066 | 1103 | 649 | 125 | | 129 | 672 | 126 | |
| FD152 | 280 | 760 | 07013 | | 3004 | 2013 | 610 | 186 | 784 | 115 | 1104 | 651 | 194 | 172 | 176 | 680 | 117 | 937 |
| FD153 | 297/325 | 761 | 07BB1710 | 2307 | 3013 | 2014 | 611 | 193 | 680 | 098 | 1105 | 696 | 196 | 262 | 172 | 697/725 | 123/143 | 955 |
| FD154 | 282 | 762 | 07YA3108 | 2362 | | 2077 | | 191 | 865 | 204 | 1106 | 655 | 200 | | 125 | 682 | | 259 |
| FD155 | 285 | 763 | 07HO3907 | 2257 | | 2119 | 122 | 189 | 2002 | 055 | 1107 | 658 | 203 | 258 | 123 | 685 | | 164 |
| FD156 | 286 | 764 | 07SU1907 | 2255 | | 2041 | 216 | 188 | 873 | 039 | 1108 | 659 | 199 | 248 | 122 | 686 | | 349 |
| FD157 | 283 | 765 | 07YA3208 | 2254 | | 2071 | 416 | 190 | 864 | 054 | 1109 | 656 | 201 | 259 | 121 | 683 | | 258 |
| FD159 | 272 | 767 | 07GR1705 | 2601 | | 2420 | | 156 | 866 | 066 | | 649 | | | 129 | 672 | | |
| FD162 | 289 | 770 | 07GR1906 | | 3031 | 2630 | 122 | 194 | 677 | 122 | 1113 | 664 | 195 | 166 | 173 | 689 | 120/168 | 9015 |
| FD163 | 259 | 771 | 07YA28RR | 2269 | | 2084 | | 162 | 2194 | 158 | 1114 | 636 | 395 | | 235 | 659 | | 253 |
| FD164 | 294 | 772 | 07KA1705 | 2300 | | 2230 | 617 | 185 | 892 | 041 | 1115 | 574 | 193 | 225 | 126 | 694 | | 161 |
| FD165 | 275 | 773 | 07BB0210 | 2353 | | 2240 | 622 | 208 | 2005 | 023 | 1116 | 672 | 206 | 275 | 181 | 675 | 175 | 953 |
| FD166 | 310 | 774 | 07016 | | 3041 | 2178 | | 210 | 2101 | 131 | 1117 | 686 | 224 | | 187 | 710 | 129 | 962 |
| FD167 | 287 | 775 | 07KA1617 | 2381 | | 2042 | 320 | 192 | 2012 | 093 | 1118 | 662 | 207 | 269 | 124 | 687 | | 434 |
| FD168 | 295 | 776 | | 2329 | | | 626 | 218 | 2007 | 116 | 1119 | 715 | 213 | | 191 | 695 | | 969 |
| FD169 | 291 | 777 | 07YA3408 | 2546 | 3025 | 2033 | 421 | 199 | 2003 | 099 | 1120 | 666 | 205 | 249 | 155 | 691 | 128 | 260 |
| FD170 | 119 | 778 | 753653 | 2249 | 3001 | 2010 | 601 | 47 | 207 | 038 | 1121 | 775 | 197 | 282 | 8 | 519 | 149 | 911 |
| FD171 | 267 | 779 | | | 3001 | 2780 | 634 | 206 | 889 | 107 | 1122 | 644 | | 263 | 177 | 667 | 114 | 256 |
| FD172 | 274 | 780 | 07BB0311 | 2396 | | 2111 | 623 | 209 | 2006 | 106 | 1123 | 671 | 216 | 256 | 169 | 674 | 176 | 958 |
| FD174 | 305 | 782 | 07KA1907 | 2383 | | 2730 | 322 | 229 | 2048 | 104 | 1124 | 682 | 228 | 260 | 193 | 705 | | 435 |
| FD175 | 323 | 783 | 07018 | | 3047 | 2018 | | 235 | 2191 | 136 | 1125 | 694 | 223 | | 211 | 723 | 141 | 996 |
| FD176 | 306 | 784 | 07BB1910 | 2539 | | 2670 | 630 | 244 | 2042 | 141 | 1126 | 683 | 221 | 270 | 223 | 706 | | 945 |
| FD177 | 302 | 785 | 07036 | 2914 | 3051 | 2250 | 218 | 230 | 2133 | 109 | 1127 | 679 | 222 | 279 | 214 | 702 | 122 | 351 |
| FD178 | 234 | 786 | 07YA2307 | 2361 | 3091 | 2045 | 418 | 252 | 605 | 070 | 1128 | 611 | 190 | 210 | 56/239 | 634 | 198 | 249 |
| FD179 | 304 | 787 | 07KA1817 | 2384 | | 2750 | 323 | 231 | 2049 | 124 | 1129 | 681 | 227 | 257 | 194/245 | 704 | | 352 |
| FD181 | | | | | | | | | 2171 | 175 | | | | | | 732 | | |
| FD182 | 356 | | | | | 2600 | 844 | 273 | 2135 | | | | 338 | | 260 | 756 | | |
| FD184 | | | | | | | | | | | | | 311 | | | | | |
| FD186 | 342 | 794 | 07BB28SP | 2900 | | 2082 | 628 | 363 | 2039 | 292 | 1133 | 707 | 229 | 277 | 228 | 742 | | 947 |
| FD187 | 313 | 795 | 07HO4408 | 2288 | 3031 | 2200 | 211 | 228 | 497 | 334 | 1134 | 689 | 230 | 169 | 192 | 713 | 163 | 340 |
| FD188 | 308 | 796 | 07005 | | 3039 | 2021 | 9 | 264 | 2190 | 174 | 1135 | 684 | 219 | | 250 | 708 | 140 | 9012 |
| FD189 | 301 | 797 | 07SU2007 | 2390 | | 2081 | 217 | 222 | 2058 | 129 | 1136 | 678 | 217 | | 182 | 701 | | 350 |
| FD190 | 246 | 798 | 07BB0110 | 2249 | 3001 | 2010 | 601 | 47/3 | 416 | 087 | 1137 | 623 | | | 87 | 646 | | 911 |
| FD193 | 276 | 801 | 07KA2009 | 2404 | | 2088 | 324 | 249 | 2036 | 126 | 1138 | 660 | 246 | 243 | 230 | 676 | | 437 |
| FD195 | 296 | 803 | 07007 | 2457 | 3020 | 2710 | 108 | 256 | 2060 | 010 | 1140 | 673 | 238 | | 241 | 696 | 124 | 152 |
| FD196 | 315 | 804 | | 2813 | | 2046 | | | | | | | | 264 | | 715 | | 436 |
| FD197 | 312 | 805 | 07017 | | 3045 | 2026 | | 255 | 2037 | 142 | 1142 | 688 | 225 | | 240 | 712 | 130 | 955 |
| FD198 | 303 | 806 | 07BB2407 | 2430 | | 2044 | 625 | 407 | 2050 | 117 | 1143 | 680 | 237 | 273 | 229 | 703 | | 959 |
| FD200 | 324 | 808 | 07019 | | 3043 | 2019 | 635 | 260 | 2057 | 137 | 1144 | 695 | 249 | 156 | 246 | 724 | 142 | 968 |
| FD204 | 326 | 812 | 07KA22SD | 2750 | | 2260 | 326 | 258 | 2080 | 108 | 1147 | 697 | 262 | 298 | 244 | 726 | | 438 |
| FD205 | 335 | 813 | 07HO4206 | | 3026 | 2047 | 124 | 261 | 2073 | 178 | 1148 | 704 | 253 | 250 | 247 | 735 | 156 | 165 |
| FD206 | 331 | 814 | 07066 | | 3027 | 2024 | 13 | 268 | 2062 | 128 | 1149 | 701 | 251 | | 255 | 731 | 145 | 960 |
| FD207 | 322 | 815 | 07HO4308 | 2602 | | 2047 | 124 | 281 | 2075 | 135 | 1150 | 693 | 255 | 250 | 247 | 722 | 147 | 165 |
| FD208 | 311 | 816 | | 2329 | | | 626 | 218/2 | 2123 | 116 | | 715 | 339 | 164 | 263 | 711 | | 969 |
| FD209 | 181 | 817 | 07SU0904 | 2387 | | 2110 | 208 | 106 | 404 | 030 | 1151 | 550 | 92 | | 35 | 581 | | 329 |
| FD210 | | 818 | | | | | | | | | | | | | | | | |
| FD214 | 328 | 822 | 07YA3707 | 2828 | 3033 | 2051 | 420 | 275 | 2083 | 146 | 1153 | 699 | 259 | 266 | 262 | 728 | 155 | 236 |
| FD216 | 299 | 824 | | | | 2105 | | 198 | | | | | | | 152 | 699 | | |
| FD218 | 333 | 826 | 07YA3807 | 2713 | | 2049 | 419 | 267 | 2084 | 169 | 1154 | 72 | 261 | 267 | 254 | 733 | | 264 |
| FD219 | 334 | 827 | 07HO4507 | 2711 | | 2048 | 127 | 265 | 2079 | 134 | 1155 | 73 | 258 | 245 | 252 | 734 | | 166 |

# BRAKE PADS CROSS • CRUCE REFERENCIAS PASTILLAS

## COMPARATIVA CODICI PASTIGLIE • CORRESPONDANCES RÉFÉRENCES PLAQUETTES

GALFER MOTO

| GALFER | AP racing | BRAKING | brembo | GROUPE CARBONE LORRAINE general | GROUPE CARBONE LORRAINE scooter | DELTA | DUNLOP | EBC | FERODO | GOLD fren | GRIMECA | Lucas | | NISSIN | PREMIER | sbs | sbs 100 | Vesrah |
|---|---|---|---|---|---|---|---|---|---|---|---|---|---|---|---|---|---|---|
| FD220 | 330 | 828 | 07BB2010 | 2827 | 3057 | 2031 | 631 | 266 | 2074 | 152 | 1156 | 700 | 256 | 285 | 253 | 730 | 157 | 964 |
| FD221 | | 829 | | | | | | | 2153 | | | | | | | | | |
| FD222 | 340 | 830 | 07037 | | 3049 | 2106 | 219 | 283 | 2085 | 147 | 1158 | 147 | 264 | 265 | 268 | 740 | 146 | 353 |
| FD223 | 402 | 831 | 07GR5804 | | | 2450 | 937 | 303 | 2109 | 168 | 1159 | 766 | 292 | | 291 | 802 | | 9001 |
| FD224 | 403 | 832 | 07GR4804 | | | 2500 | 936 | 351 | 2127 | 173 | 1160 | 767 | 315 | | 312 | 803 | | 9003 |
| FD225 | 415 | 833 | 07GR5105 | | | 2820 | 640 | 291 | 2103 | 143 | 1161 | 770 | 268 | | 274 | 815 | | |
| FD226 | | 834 | | | | | | | | | | | | | | | | |
| FD228 | 347 | 840 | 07020 | | 3055 | 2025 | 15 | 298 | 2090 | 150 | 1163 | 710 | 267 | 152 | 278 | 747 | 152 | 974 |
| FD230 | 394 | 897 | 07GR70SD | 1128 | | 2360 | 924 | 325 | 2183 | 819 | | 750 | 372 | | | 794 | | 991 |
| FD232 | 344 | 840 | 07BB1810 | 2249 | 3001 | 2010 | 601 | 47 | 2081 | 38 | | 775 | 263 | 181 | 8 | 744 | | 911 |
| FD234 | 348 | 842 | 07021 | | 3064 | 2022 | | 301 | 2095 | 170 | 1166 | 709 | 271 | 153 | 280 | 748 | 153 | 976 |
| FD235 | 350 | 843 | 07HD1210 | 2958 | | 2137 | 918 | 299 | 2097 | 181 | 1167 | 711 | 290 | | 279 | 750 | | 971 |
| FD238 | 402 | 846 | 07GR5804 | | | 2450 | 937 | 303 | 2109 | 198 | 1168 | 766 | 292 | | 291 | 802 | | 9001 |
| FD239 | 403 | 847 | 07GR4804 | | | 2500 | 936 | 471 | 2127 | 199 | 1169 | 767 | 315 | | 312 | 803 | | 9003 |
| FD245 | 361 | 853 | 07045 | | 3056 | 2097 | | 324 | 2105 | 193 | 1171 | 726 | 282 | 162 | 289 | 761 | 159 | 9017 |
| FD251 | 346 | 861 | 07BB2507 | 2987 | | 2115 | 637 | 304 | 2102 | 195 | | 713 | 277 | | 281 | 746 | | 995 |
| FD252 | 185 | | 07KS0432 | | | 2117 | | 93 | 384 | 289 | 1173 | 523 | 77 | | 130 | 585 | | 346 |
| FD254 | 352 | 894 | 07KA27SD | 1034 | | 2270 | 328 | 302 | 2110 | 167 | 1174 | 714 | 295 | | 282 | 752 | | 440 |
| FD259 | 384 | 867 | 07HO4905 | 1067 | | 2075 | 129 | 343 | 2143 | 221 | 1175 | 738 | 331 | 304 | 303 | 784 | | 182 |
| FD260 | 368 | 868 | | 1084 | 3061 | 2074 | 424 | 319 | 2126 | 165 | 1176 | 722 | 316 | 337 | 293 | 768 | 169 | 269 |
| FD261 | 349 | 869 | 07022 | 1153 | 3068 | 2023 | | 305 | 2096 | 183 | 1177 | 712 | 269 | 168 | 285 | 749 | 154 | 995 |
| FD262 | 362 | 870 | 07BB0510 | 1033 | | 2830 | 638 | 322 | 2120 | 177 | 1178 | 721 | 305 | 290 | 294 | 762 | | 986 |
| FD263 | 372 | 871 | 07047 | | 3054 | 2086 | 16 | 321 | 2115 | 186 | 1179 | 727 | 298 | 154 | 290 | 772 | 166 | 981 |
| FD265 | 383 | 873 | 07GR69SD | 1078 | | 2290 | 923 | 357 | 2157 | 185 | 1180 | 740 | 354 | | 318 | 783 | | 9006 |
| FD266 | 227 | 716 | | 2256 | 3003 | | 117 | 142 | 570 | 022 | 1181 | 598 | 325 | 202 | | 627 | | 156 |
| FD267 | 365 | 875 | 07KA2107 | 2813 | | 2046 | 220 | 254 | 2111 | 148 | 1182 | 691 | 347 | 264 | 231 | 765 | | 436 |
| FD270 | 373 | 878 | 07048 | 1223 | 3063 | 2032 | 17 | 350 | 2128 | 211 | 1185 | 735 | 323 | 158 | 311 | 773 | 167 | 999 |
| FD271 | 396 | 892 | 07BB2607 | 1101 | | 2095 | 641 | 335 | 2125 | 196 | 1186 | 748 | 320 | 329 | 299 | 796 | | 9000 |
| FD272 | 378 | 879 | 07GR6207 | 2960 | | 2065 | 639 | 294 | 2124 | 194 | 1187 | 736 | 319 | 328 | 271 | 778 | | 439 |
| FD275 | 375 | 883 | 07GR71SD | 1151 | 3070 | 2520 | | 355 | 2141 | 140 | 1190 | 732 | 327 | | 316 | 775 | 171 | 987 |
| FD276 | 376 | 884 | 07051 | | 3071 | 2880 | | 356 | 2140 | 192 | 1191 | 733 | 328 | | 317 | 776 | 172 | 988 |
| FD277 | 386 | 888 | | | 3060 | 2103 | 18 | 353 | 2142 | 293 | 1192 | 744 | 330 | 167 | 314 | 786 | 177 | 983 |
| FD278 | 377 | 886 | 07HO48SD | 1076 | | 2280 | 921 | 346 | 2139 | 176 | 1193 | 730 | 329 | 286 | 306 | 777 | | 168 |
| FD284 | 309 | 887 | | | 3073 | 2080 | 927 | 323 | 2119 | 188 | 1198 | 685 | 265 | 294 | 295 | 709 | 125 | 136 |
| FD286 | 390 | 890 | 07YA41SD | 1103 | | 2310 | 940 | 367 | 2162 | 187 | 1199 | 739 | 349 | 296 | 326 | 790 | 199 | 271 |
| FD290 | 388 | 893 | 07SU26RC | 1110 | | 2102 | 942 | 369 | 2164 | 200 | 1203 | 742 | 352 | 300 | 328 | 788 | | 354 |
| FD291 | 391 | 891 | 07BB2750 | 1108 | | 2320 | 935 | 368 | 2165 | 191 | 1204 | 743 | 348 | 299 | 327 | 791 | | 438 |
| FD295 | 369 | 903 | 07YA3908 | 1084 | 3061 | 2074 | 423 | 319 | 2156 | 165 | 1207 | 731 | 345 | 297 | 293 | 769 | 169 | 269 |
| FD297 | 380 | 885 | 07054 | | 3081 | 2029 | | 374 | 2147 | 215 | 1209 | 796 | 334 | | 331 | 780 | 173 | 9013 |
| FD298 | 397 | 902 | 07HO5606 | 1148 | 3080 | 2092 | 14 | 375 | 2169 | 210 | 1210 | 759 | 355 | 305 | 332 | 797 | 180 | 177 |
| FD299 | 162 | | | | | 2070 | 811 | 84 | 661 | 7 | 1211 | 538 | | 283 | | 562 | | |
| FD300 | 317 | 856 | 07PO03SD | 2924 | | 2440 | 909 | 232 | 2054 | 216 | 1212 | 668 | 279 | | 201 | 717 | | 950 |
| FD301 | 355 | 860 | 07PO04SD | 2925 | | 2410 | 915 | 270 | 2121 | 179 | 1213 | 762 | 294 | | 257 | 755 | | 963 |
| FD302 | 358 | 861 | 07GR54SD | 2926 | | 2570 | 914 | 271 | 2175 | 232 | | 763 | 309 | | 258 | 758 | | 965 |
| FD303 | 316 | | 07PO02SD | 2927 | | 2460 | 902 | 159 | 2055 | 162 | 1214 | 761 | 280 | | 159 | 716 | | 940 |
| FD304 | 443 | 932 | 07GR76SX | | | 2870 | 979 | 433 | 2244 | 238 | | 794 | 363 | | 378 | 843 | | |
| FD314 | 249 | | | | | 2470 | 817 | 137 | 2016 | | | 626 | 145 | 302 | 103 | 649 | | 341 |
| FD315 | 354 | 862 | 07GR49SD | 2923 | 3090 | 2400 | 327 | 307 | 2148 | 182 | 1221 | 724 | 301 | 291 | 283 | 754 | 196 | 266 |
| FD316 | 357 | | | | | 2066 | | 313 | | | | | 317 | | 286 | 757 | | 973 |
| FD317 | 387 | | 07PO06SD | 1165 | | 2590 | 932 | 314 | 2176 | 209 | | 798 | 346 | | 319 | 787 | | 992 |
| FD318 | 367 | | 07GR50SD | 1102 | | 2380 | 920 | 317 | 2149 | 205 | 1222 | 723 | 318 | 292 | 292 | 767 | | 979 |
| FD319 | 401 | | | 1142 | | 2490 | 929 | 342 | 2188 | 108 | | 757 | 374 | | 302 | 801 | | 441 |
| FD320 | 399 | | 07YA45SD | | | 2550 | 930 | 344 | 2193 | 281 | | 756 | | | 304 | 799 | | 270 |
| FD321 | 398 | | 07KA25 | 2750 | | 2260 | 929 | 349 | 2080 | 245 | | 757 | 375 | 298 | 309 | 798 | | 441 |
| FD322 | 400 | | 07PO07 | | | 2620 | | 354 | 2236 | | | 765 | | | 315 | 800 | | 9024 |
| FD323 | 413 | 911 | 07HO55SD | | 1140 | 2580 | 944 | 373 | 2182 | 243 | 1223 | 769 | 376 | | 330 | 813 | | 171 |
| FD325 | 406 | 898 | 07SU27RC | 1133 | | 2118 | 947 | 379 | 2178 | 213 | 1225 | 752 | 362 | 289 | 334 | 806 | | 355 |
| FD326 | 409 | 899 | 07HO50RC | 1134 | | 2107 | 950 | 390 | 2181 | 214 | 1226 | 755 | 364 | 301 | 342 | 809 | | 170 |
| FD329 | 370 | | 07YA4007 | 1066 | | 2093 | 931 | 348 | 2150 | 222 | 1227 | 725 | | | 308 | 770 | | 268 |
| FD331 | 382 | 906 | 07KA2305 | 1083 | | 2104 | 922 | 347 | 2158 | 207 | 1229 | 737 | 351 | 287 | 307 | 782 | | 443 |
| FD334 | 418 | 953 | 07060 | | 3077 | 2143 | | 418 | 2186 | 266 | 1232 | 771 | 414 | 170 | 363 | 818 | 187 | |
| FD335 | 496 | | | | | 2840 | | 403 | | 228 | 1233 | 852 | 382 | | 349 | 896 | | |
| FD336 | 410 | | 07GR5209 | 1147 | | 2530 | 967 | 377 | 2184 | 230 | 1234 | 760 | 383 | | 333 | 810 | | 9026 |
| FD337 | | | | | | | | 426 | 2185 | | | | 379 | | 369 | | | |
| FD338 | | | | | | | | | | | | | 449 | | | | | |
| FD339 | 407 | 900 | 07HD13SA | 1149 | | 2133 | 948 | 381 | 2179 | 272 | | 753 | 387 | | 336 | 807 | | 9009 |
| FD340 | 408 | 901 | 07HD14SP | 1150 | | 2134 | 949 | 387 | 2180 | 274 | | 754 | 386 | | 339 | 808 | | 9010 |
| FD341 | 421 | | 07GR72SA | | | 2125 | | 399 | 2201 | 233 | 1235 | 780 | 380 | | 346 | 821 | 189 | 9004 |
| FD342 | 423 | | 07068 | 1144 | 3069 | 2139 | | 393 | 2224 | | 1236 | 774 | | | 343 | 823 | 190 | 273 |
| FD343 | 431 | 909 | 07061 | | 3084 | 2124 | 944 | 425 | 2207 | 263 | 1237 | 782 | 394 | 155 | 368 | 831 | 191 | |
| FD344 | 428 | 910 | 07HO57SA | 1159 | 3082 | 2114 | 954 | 388 | 2196 | 257 | 1244 | 776 | 400 | 307 | 340 | 828 | 192 | 172 |
| FD345 | 432 | 908 | 07HO58SD | | 3083 | 2015 | 959 | 415 | 2212 | 287 | 1245 | 806 | 401 | 334 | 360 | 832 | 193 | 173 |
| FD351 | | | | | | | | | GRIM | | | | | | | | | |
| FD352 | 412 | 904 | 07059 | | 3075 | 2096 | 540 | 408 | 2200 | 268 | | 768 | 378 | 338 | 352 | 812 | 185 | 275 |
| FD353 | 422 | | 07GR53SD | 1171 | | 2011 | 956 | 395 | | 254 | 1240 | 773 | 418 | | 344 | 822 | | 9023 |
| FD355 | 437 | 926 | 07065 | | 3085 | 2142 | 23 | 430 | 2208 | 262 | 1241 | 786 | 396 | 335 | 375 | 837 | 194 | |

| GALFER | AP Racing | BRAKING | brembo | CARBONE LORRAINE general | CARBONE LORRAINE scooter | DELTA | DUNLOP | EBC | FERODO | GOLD FRIC | GRIMECA | Lucas | TRW | NISSIN | PREMIER | sbs | sbs 100 | Vesrah |
|---|---|---|---|---|---|---|---|---|---|---|---|---|---|---|---|---|---|---|
| FD356 | 319 | | | | | | | 272 | | | | | | | | 719 | | |
| FD359 | 433 | 924 | 07SU32SP | 1163 | | 2127 | 963 | 419 | 2213 | 241 | 1242 | 783 | 402 | 319 | 364 | 833 | | 359 |
| FD362 | 420 | 905 | 07SU31SD | 1152 | | 2540 | 953 | 401 | 2197 | 226 | | 772 | 399 | | 348 | 820 | | 358 |
| FD363 | 434 | 925 | 07HO59SP | 1174 | | 2138 | 973 | 436 | 2221 | 242 | | 785 | 412 | 320 | 381 | 834 | | 359 |
| FD364 | 440 | 929 | 07YA47SD | 1183 | | 2850 | 983 | 450 | 2219 | 248 | | 791 | 411 | 318 | 392 | 840 | | 280 |
| FD365 | 439 | 928 | 07YA46RC | 1180 | | 2141 | 977 | 442 | 2217 | 246 | | 795 | 407 | 321 | | 839 | | 277 |
| FD367 | 444 | 933 | 07GR7707 | 1187 | | 2153 | 517 | 432 | 2216 | 251 | | 786 | 404 | | 377 | 844 | 214 | 9052 |
| FD369 | 430 | 934 | | 1172 | | 2148 | 962 | 409 | 2210 | 271 | | 781 | 405 | | 353 | 830 | | 9025 |
| FD370 | 429 | | 07HO58 | | | 2015 | 959 | 410 | 2195 | 240 | | 806 | 397 | | 354 | 829 | | 175 |
| FD371 | 438 | 927 | 07KA28RC | 1177 | | 2126 | 964 | 417 | 2220 | 249 | | 789 | 419 | 311 | 362 | 838 | | 354 |
| FD372 | 340 | 830 | | 1175 | | 2121 | 965 | 423 | 2085 | 326 | | 706 | | 265 | 366 | 740 | | 353 |
| FD373 | 441 | 930 | 07BB3050 | 1185 | | 2154 | 978 | 447 | 2218 | 258 | | 792 | 415 | | 389 | 841 | | 9031 |
| FD374 | | | | | | 2197 | | 438 | 2246 | | | | | | 382 | | | |
| FD375 | 426 | | 07HD16SA | | | 2135 | 957 | 400 | 2202 | | | 799 | 389 | | 347 | 826 | | 9022 |
| FD376 | 446 | | 07HD18SP | 2958 | | 2144 | 971 | 434 | | | | 777 | | | 379 | 846 | | 9033 |
| FD377 | | | | | | 2196 | | 441 | | | | | | | 383 | | | |
| FD378 | 450 | | 07YA49SD | 1195 | | 2155 | 979 | 443 | 2231 | 252 | | 801 | 427 | | 385 | 850 | | 279 |
| FD379 | 449 | | 07YA48SD | 1194 | | 2156 | 980 | 444 | 2230 | 253 | | 802 | 429 | | 386 | 849 | | 278 |
| FD380 | 452 | | 07YA51SD | 1195 | | 2157 | 981 | 445 | 2233 | 255 | | 803 | 428 | | 387 | 852 | | 279 |
| FD381 | 451 | | 07YA50SD | 1194 | | 2158 | 982 | 446 | 2232 | 256 | | 804 | 430 | | 388 | 851 | | 278 |
| FD384 | 276 | 801 | | 2899 | | | 324 | 424 | 2036 | 126 | | 660 | | | 367 | 676 | | 437 |
| FD391 | 405 | | | 1075 | | 2186 | 977 | 435 | 2166 | 239 | | 790 | 370 | | 380 | 805 | | 9011 |
| FD392 | 359 | | | | | | | | 2122 | 203 | | | | | | 759 | | 203 |
| FD393 | 458 | | | 1224 | | 2174 | | 464 | 2238 | 264 | | 812 | 437 | | 404 | 858 | | 282 |
| FD397 | 456 | | | | | 2204 | 993 | 454 | 2240 | 269 | | 810 | 438 | | 395 | 856 | | 9038 |
| FD398 | 457 | 938 | | | | 2187 | | 460 | 2241 | 290 | | 811 | | | 401 | 857 | | |
| FD399 | 447 | 948 | 07069 | 1184 | 3092 | 2128 | | 427 | 2226 | 286 | | 800 | 445 | 165 | 370 | 847 | 195 | 9045 |
| FD400 | 381 | 887 | 07055 | | | 2161 | 927 | 411 | 2132 | 267 | | 746 | | 310 | 355 | 781 | 174 | 356 |
| FD401 | 404 | 896 | 07058 | | 3066 | 2185 | 968 | 412 | 2173 | 265 | | 751 | 356 | 294 | 356 | 804 | 182 | 357 |
| FD402 | 395 | 895 | 07GR68SA | | | 2166 | 926 | 345 | 2145 | 270 | | 747 | | | 305 | 795 | | 993 |
| FD403 | | | | | | 2179 | 996 | 452 | 2263 | | | | | | 393 | | | |
| FD404 | | | | | | 2176 | 984 | 456 | | | | | | | 397 | 898 | | 9037 |
| FD405 | 453 | 943 | | 1212 | | 2168 | 986 | 457 | 2250 | 275 | | 813 | 443 | | 398 | 853 | | 9034 |
| FD406 | 454 | 944 | | 1213 | | 2169 | 987 | 458 | 2251 | 273 | | 814 | 436 | | 399 | 854 | | 9035 |
| FD407 | 466 | | | 1204 | | 2171 | 989 | 462 | 2268 | 321 | | 824 | | | 402 | 866 | | 9046 |
| FD408 | 467 | | | 1205 | | 2172 | 989 | 463 | | 260 | | 825 | | | 403 | 867 | | 9047 |
| FD409 | 459 | | | | | 2177 | | 465 | 2242 | 278 | | 818 | 444 | | 405 | 859 | | 181 |
| FD410 | 373 | | | 1223 | 3063 | | 17 | 350 | | 211 | | 735 | | 158 | | 773 | | 999 |
| FD411 | | | | | | | | | | 261 | | 818 | | | | | | |
| FD412 | 392 | | 07062 | | 3067 | 2112 | | 306 | 2108 | 234 | | 779 | | | 284 | 792 | 178 | 994 |
| FD414 | 464 | 941 | | 1209 | | | 999 | 491 | 2252 | 296 | | 816 | 441 | | 424 | 864 | | 9048 |
| FD428 | 495 | | | | | 2201 | | 495 | 2267 | 282 | | 851 | 496 | | 426 | 895 | | |
| FD437 | | 947 | | 1207 | | 2207 | 509 | 604 | 2255 | 304 | | 829 | 466 | | 438 | 870 | | 9053 |
| FD438 | | 945 | | 2010 | | 2218 | | 498 | 2248 | 302 | | 830 | 460 | | 430 | | 204 | |
| FD439 | | 954 | | | | 2222 | 27 | 603 | 2256 | 299 | | 833 | 467 | | 433 | | 205 | |
| FD441 | 472 | 949 | | 1219 | | 2198 | 508 | 602 | 2257 | 297 | | 831 | 464 | | 434 | 872 | | 9063 |
| FD442 | 469 | 950 | | 1216 | | 2203 | 504 | 499 | 2259 | 298 | | 828 | | | 431 | 869 | | 179 |
| FD443 | 462 | 942 | | 1217 | | 2192 | 954 | 488 | 2253 | 277 | | 817 | 446 | | 421 | 862 | | 178 |
| FD444 | | | | | | | | | | | | | | | | | | |
| FD446 | 485 | 955 | 07GR20 | | | | 514 | 612 | 2262 | 308 | | 842 | | | 446 | 885 | | 9058 |
| FD450 | 477 | 952 | 07GR18 | | | 2217 | 519 | 606 | 2266 | 305 | | 834 | | | 439 | 877 | | 9068 |
| FD456 | | | | | | 2310 | 940 | 367/2 | | | | 820 | | | 432 | 861 | | |
| FD457 | 390 | 956 | | 3076 | 2298 | | 513 | 496 | 2258 | 306 | | 841 | 470 | | 427 | 881 | | 147 |
| FD458 | 485 | 955 | | | | | 514 | | 2262 | 307 | | 842 | | | | 885 | | 9058 |
| FD460 | | | | | | | | 644 | | 325 | | | | | | | | |
| FD473 | | 961 | | 3098 | | 2202 | | 492 | 2264 | 330 | | 835 | | | 425 | 208 | 208 | 283 |
| FD474 | 463 | 958 | | | | 2219 | | 607 | 2254 | | | | 445 | | 441 | 863 | 195 | |
| FD475 | | 960 | | | | | 528 | 630 | 2265 | 328 | | 856 | | | 461 | 900 | | 9070 |
| FD476 | | | | | | | | | | | | | | | | | | |
| FD477 | | | | | | | | | | | | | | | | | | |
| FD478 | | | | | | | | 611 | 2228 | | | 815 | | | | 845 | | 9043 |
| FD479 | | | | | | | | | | | | | | | | | | |
| FD480 | | | | | | | | | | | | | | | | | | |
| FD481 | | | | | | | | 627 | | 331 | | 849 | | | 457 | | 215 | |
| FD482 | | | | | | | | | | | | | | | | | | |
| FD483 | | | | | | | | 628 | | | | | | | 458 | | | |
| FD484 | | | | | | | | | | | | | | | | | | |
| FD485 | | | | | | | | | | | | | | | | | | |
| FD486 | 363 | 907 | | 1203 | | 2145 | 958 | 320 | 2198 | 235 | | 797 | | | 298 | 763 | | 998 |

| DESCRIPTION | EFFECT |
|---|---|
| *Shine on a few areas of the Brake Pad compound surface.* | *Brake lever hard what we call "card board" effect; there is pressure but no brake power. Maybe noise as well.* |
| *Rotor compound attached to brake pad surface.* | *Brake squeal caused for the un even flatness on rotor's surface.* |
| *Brake pads wear has exceeded the minimum thickness required to operate.* | *The brake system will have a "pulling" effect to the right or left side, noise such as grinding since the pads are meeting with rotor surface.* |
| *Brake pad surface wearing in an un-even flatness. Brake pad used only in one certain area.* | *Brake fade due to having only a portion of the pad getting all the brake work required. Noise due to high temperature on only a portion of the brake pad surface.* |
| *Brake pad backing plate bent or warped.* | *Noise brakes, pulling effect towards right or left, brake vibration when applied. Uneven wear.* |
| *Brake pad wear with deep excessive grooves on brake pad surface.* | *Brake noise and initial brake bite very unstable.* |
| *Friction compound presents different colours in braking surface.* | *The brakes will vibrate when applied; they will not stop correctly, loss of brake power.* |
| *Brake pad compound shows grooves traveling sideways.* | *Brake lever feels very "spongy".* |
| *Brake pad compound getting off the backing plate.* | *Possible complete brake failure by loosing brake pad and brake lever pressure.* |
| *Brake pad compound shows white spots in the outer edges of the friction surface.* | *Loss of brake power due to lack of "cool off" period for brake pads, lever feels fade effect.* |

| DESCRIPCIÓN | EFECTO |
|---|---|
| Brillos en zonas parciales del material de fricción | Frenada ineficaz y poco potente. Alarga y la maneta se muestra dura. Ruidos. |
| Partículas del disco incrustadas en el material de fricción. | Chirridos provocados por las irregularidades de ambas superficies |
| El espesor del material de fricción está muy por debajo del limite mínimo establecido llegando a rayar el disco. | Inestabilidad en las frenadas, desplazándose el vehiculo hacia algún lado. Ruido muy elevado metálico a baja y alta velocidad. Pedal largo y no para. |
| Desgaste irregular en distintas zonas de la superficie del material de fricción. Apoya parcialmente. | Vibraciones y chillidos. Ineficacia al frenar al superar en ciertos puntos de la pastilla su temperatura de trabajo. Sólo apoya una zona. Fading. |
| El soporte del material de fricción se ha doblado. | Frenada inestable con cambios bruscos de trayectoria. Ruidos y vibraciones en la maneta de freno. Desgaste irregular. |
| Desgaste con surcos excesivos en la pastilla. | Ruidos y vibraciones molestos. Frenada inicial inestable, perdiendo la trayectoria. |
| Desgaste irregular en espesor en la superficie del material de fricción. | Vibraciones y ruidos. Frenada incorrecta por la distribución de presiones y esfuerzos. |
| Material de fricción con distintos colores y aspectos en su superficie. | Ruidos y vibraciones. Perdida de eficacia. Pérdida de coeficiente. |
| La superficie del material de fricción presenta grietas laterales. | Vibraciones y ruidos. Tacto de la maneta esponjoso, más largo. |
| Cizallamiento del material de fricción, desprendiéndose del soporte. | Frenada ineficaz e inestable.Recorrido de la maneta modificado. Posible pérdida de la pastilla de freno. |
| El material de fricción se ha desprendido del soporte. | Pérdida de eficacia de frenado debido a la desaparición de material. Ruidos y vibraciones. Aumenta el recorrido de la maneta. |
| Material de fricción blanquecino, sobre todo en los bordes. | Ruidos. Modificación del tacto con el pedal. Perdida de eficacia, debido a la modificación del coeficiente de fricción. |

| DESCRIZIONE | EFFEITO |
|---|---|
| *Brillantezza circoscritta in poche zone della superficie del materiale d'attrito della pastigla.* | *Leva del freno dura c'e pressione ma non c'è potenza frenante. Potrebbe esserci rumorosità.* |
| *Il materiale dei dischi freno è attaccato alla superficie della pastiglia freno.* | *Fischio,rumore del freno causato dall'irregolarità della superficie del disco.* |
| *Lo spessore del materiale d'attrito e' inferiore al limite minimo richiesto.* | *Instabilità nella frenata tendenza a " tirare " verso destra o sinistra, rumore dovuta al contatto tra le pastiglie e la superficie del disco.* |
| *La superficie della pastiglia si consuma in modo irregolare. Pastiglia utilizzata solamente in alcuni punti.* | *Attenuazione della frenata dovuta al fatto che soltanto una porzione della pastiglia è a contatto con il disco freno. Rumorosità dovuta alle alte temperature solo su una porzione della superficie della pastiglia.* |
| *Pastiglia freno rovente o supporto metallico pastiglia freno deformato.* | *Rumorosità nella frenata, "tira" a destra o sinistra, vibrazioni dei freni quando utilizzati. Consumo non uniforme.* |
| *Pastiglia freno si consuma con solchi eccessivamente profondi sulla superficie.* | *Rumorosità in frenata, frenata molto instabile.* |
| *Il materiale d'attrito presenta colori differenti sulla superficie.* | *Vibrazioni, frenata non corretta, perdita di potenza.* |
| *Il materiale d'attrito delle pastiglie mostra solchi trasversali.* | *La leva del freno è spugnosa.* |
| *Il materiale d'attrito delle pastiglie si stacca dal supporto metallico.* | *L'impianto frenante non frena con perdita della pastiglia e della pressione della leva del freno.* |
| *Il materiale d'attrito presenta dei punti bianchi nei bordi esterni.* | *Perdita della potenza frenante dovuta alla variazione del coefficiente d'attrito.* |

| DESCRIPTION | EFFET |
|---|---|
| *Des éclats dans des zones partielles du matériel de friction.* | *Un freinage inefficace et peu puissant. Il allonge et la poignée se montre dure. Des bruits.* |
| *Des particules du disque incrustées dans le matériel de friction.* | *Des grincements provoqués par l'irrégularité des deux surfaces.* |
| *L'épaisseur du matériel de friction est très au-dessous de la limite minimale indiquée et arrive à rayer le disque.* | *Une instabilité dans les freinages, en déplaçant le véhicule vers un côté. Un bruit très élevé et métallique à une basse/haute vitesse.* |
| *Une usure irrégulière dans des zones distinctes de la surface du matériel de friction. Contact partiel.* | *Des vibrations et des bruits perçants. une inefficacité après avoir freiné et après avoir surpassé en certains points de la plaquette sa température de travail. elle appuie seulement en une zone. Fading.* |
| *Le support du matériel de friction s'est plié.* | *Un freinage instable avec des échanges brusques de trajectoire. des bruits et des vibrations dans la poignée de frein. une usure irrégulière.* |
| *Une usure avec des sillons excessifs dans la plaquette.* | *Des bruits ennuyeux et des vibrations. un freinage initial instable, perte de trajectoire.* |
| *Une usure irrégulière dans une épaisseur sur la surface du matériel de friction.* | *Des vibrations et des bruits. un freinage incorrect par la distribution de pressions et d'efforts.* |
| *Un matériel de friction avec des couleurs distinctes et des aspects différents sur sa surface.* | *Des bruits et des vibrations. une perte d'efficacité.* |
| *La surface du matériel de friction présente des crevasses latérales.* | *Des vibrations et des bruits. un toucher de la poignée spongieux, plus long.* |
| *Cisaillement du matériel de friction, en se détachant du support.* | *Un freinage inefficace et instable. un parcours modifié de la poignée. Une perte possible de la plaquette de frein.* |
| *La matière de friction s'est détachée du support.* | *Une perte d'efficacité de freinage grâce à la disparition de matériel. Des bruits et des vibrations. Le parcours de la poignée augmente.* |
| *Un matériel blanchâtre de friction, surtout aux bords.* | *Des bruits. Une modification du toucher avec la pédale. une perte d'efficacité, grâce à la modification du coefficient de friction.* |

| CAUSE | ADVICE |
|---|---|
| Brake pad compound that is of lower quality and that it is trying to perform under heat levels that it cannot withstand. | Try using our Galfer G1651 or 1375 compound depending on rider's ability and use. Make sure discs are clean. |
| Poor staineless steel quality of the rotor's compounding, it does not hold temperature and fails to perform under working temperature. | Replace pads and rotors. |
| Brake pad compound has not been checked for wear, it has now gotten to a point that requires brake pads to be removed. | Replace pads and check rotors for possible damage to caliper. |
| Brake pad positioned wrong to surface mate. It could be due to other elements of the brake system not being lined up properly (caliper, bracket, rotor mount). | Change brake pads, re mount calipers and discs following manufacturers specifications on mounting torques and sequence. |
| Brake pad that was installed wrong or that does not belong to that caliper (wrong application). | Replace pads for the right part number. Check for all necessary hardware and parts to properly install new pads. Check for perfect fitment. |
| Brake rotor has scored brake pads to a point that pads must be replaced. | Replace brake pads and clean rotors surface. If necessary re-surface or exchange rotors. |
| Brake compound used is not the correct one. Compound gets removed from pad not holding the excessive workload. | Brake pads must be removed, try using Galfer G1651 or G1375 compound. Check rotors for flatness and heat spotting. |
| Brake pads are the wrong applications. Possible defective brake pad. | Replace pads. |
| Not enough adhesive material used in production. Brake pads mis treated while transport. | Remove pads and inspect system. |
| Very high temperatures on brake system. Pads could be "dragging" on system due to sticky calipers, overfilled brake reservoir. | Check brake system, possibly rebuild caliper and master cylinder, and install a new set of G1651 or G1375 compounds. |

| CAUSA | CONSEJO |
|---|---|
| Material de fricción de mala calidad, entra en crisis y cristaliza debido a un compuesto que no soporta ciertas temperaturas. | Sustituir pastillas Comprobar discos.Pasar a calidad G1651 o G1375 para uso deportivo. |
| Mala calidad del material del disco. Se desprende e incrusta en la pastilla al no soportar la temperatura de trabajo. | Sustituir discos y pastillas. |
| No se ha comprobado el espesor del material de fricción, gastándose por completo, llegando a rozar el soporte metálico con el disco. | Sustituir pastillas y discos.<br>Comprobar funcionamiento de la pinza de freno. |
| Mal posicionamiento de las pastillas debido a elementos del sistema de frenado (pinza, soporte,...) ó desgaste del disco irregular. | Sustituir pastillas. Comprobar discos, pinzas y soportes. |
| Pastilla que no corresponde a dicha pinza ó bien a un montaje defectuoso. | Sustituir pastillas por las correctas. Comprobar alojamiento pastillas y el resto de elementos del sistema de frenado. |
| Desgaste excesivo de las pastillas por debajo de los límites establecidos, a causa de surcos en la pista del disco. | Sustituir pastillas. Comprobar los discos. |
| Mala alineación del sistema de freno. | Sustituir pastillas. Revisar alineación piezas sistema frenos. |
| Compuesto del material de fricción no adecuado; se desprende y arrastra el material. | Sustituir las pastillas. Comprobar los discos. Pasar a calidad G1651 O G1375. |
| Golpe en manipulación. Pastilla incorrecta ó defectuosa de origen. | Sustituir pastillas. |
| Encolado insuficiente del material al soporte. Golpe en manipulación ó transporte. Montaje inadecuado con algún punto de contacto. | Sustituir pastillas y comprobar discos y pinza. |
| Defecto de origen o incorrecto montaje, como princial causa. | Sustituir pastillas y comprobar discos y pinzas ya que podrían estar dañados. |
| Elevadísima temperatura debido a uso deportivo ó que algún elemento del equipo de frenos no actúa y mantiene la pastilla contra el disco. | Verificar funcionamiento y piezas del sistema de frenado. Pasar a compuestos deportivos G1651 ó G1375. |

| CAUSA | SOLUZIONE |
|---|---|
| Il materiale d'attrito della pastiglia di scarsa qualità cristallizza e non riesce a sopportare tali temperature. | Prova ad Utilizzare Galfer G1651 o 1375 in funzione dello stile di guida del pilota. Assicuratevi che i dischi siano puliti. |
| Cattiva qualità del disco freno, non sopporta temperature elevate e rovina la mescola della pastiglia. | Sostituire dischi e pastiglie. |
| Non è stato controllato il consumo del materiale d'attrito delle pastiglie, giungendo al punto in cui si richiede la sostituzione delle pastiglie freno. | Sostituire le pastiglie e controllare i dischi freno,per possibili danneggiamenti alle pinze freno. |
| Pastiglia freno installata in modo erroneo non si accoppia correttamente. Potrebbe essere dovuto ad un cattivo posizionamento di altri elementi dell'impianto frenante (pinza, supporto,montaggio dischi). | Cambiare le pastiglie, rimontare le pinze e i dischi seguendo le istruzioni del produttore. |
| La pastiglia freno è stata installata in modo erroneo o non si adatta alla pinza freno (applicazione sbagliata). | Sostituire le pastiglie freno con il codice corretto. Controllare tutte le componenti necessitare per installare correttamente le nuove pastiglie freno. Controllare per una perfetta funzionalità. |
| Il disco freno ha segnato la pastiglia al punto che questa deve essere sostituita. | Sostituire la pastiglia freno e pulire la superficie del disco freno. Se necessario rettificare o cambiare il disco freno. |
| La mescola del materiale d'attrito utilizzata non e' quella corretta, il materiale d'attrito si stacca dalla pastiglia non sostenendo l'eccessivo carico di lavoro. | Le pastiglie freno devono essere sostituite, provare ad utilizzare le mescole Galfer G1651 o G1375. Controllare i dischi per planarità e perdite di calore. |
| Codice della pastiglia freno non idoneo. Possibile difettosità della pastiglia freno. | Sostituire le pastiglie. |
| Il materiale adesivo utilizzato in produzione è insufficiente o pastiglie freno danneggiate durante il trasporto. | Rimuovere le pastiglie e ispezionare il sistema. |
| Temperature elevate dell' impianto frenante. Alcuni elementi dell'impianto frenante non funzionano mantenendo in contatto la pastiglia al disco. | Controllare l'impianto frenante, possibilmente rettificare pinza e pistoncini, installare installare un nuovo set di G1651 o G1375. |

| CAUSE | RECOMMANDATIONS |
|---|---|
| Un matériel de friction de mauvaise qualité, il se cristallise à cause d'un composant qui ne supporte pas certaines températures. | Changer les plaquettes, vérifier les disques. Passer à une qualité pour un usage sportif. |
| Une mauvaise qualité du matériel du disque. il se détache et s'incruste dans la plaquette après ne pas avoir supporté la température de travail. | Changer les disques et les plaquettes. |
| L'épaisseur du matériel de friction n'a pas été vérifiée, étant complètement usé, et le support métallique frotte avec le disque. | Changer les plaquettes et les disques. Vérifier le fonctionnement de l'étrier de frein. |
| Un mauvais positionnement des plaquettes à cause de certains éléments du système de freinage (étrier, support...) ou d'une usure du disque irrégulière. | Changer les plaquettes. Vérifier les disques, les étriers et les supports. |
| La plaquette qui ne communique pas à l'étrier ou bien un montage défectueux. | Changer les plaquettes par les correctes. Vérifier le logement des plaquettes et le reste d'éléments du système de freinage. |
| Une usure excessive des plaquettes au-dessous des limites indiquées, à cause des sillons dans la piste du disque. | Changer les plaquettes. Vérifier les disques. |
| Un mauvais alignement du système de frein. | Changer les plaquettes. Réviser l'alignement des pièces un système des freins. |
| Un composant du matériel de friction non approprié. Il se désagrège.. | Changer les plaquettes. vérifier les disques. Passer à une qualité: G1651 ou G1375. |
| Une plaquette incorrecte ou défectueuse d'origine ou qui a reçu un choc au montage. | Changer les plaquettes. |
| Fixation insuffisante du matériel au support. Choc durant manipulation ou transport. Un montage inadéquat avec un point de contact. | Changer les plaquettes et vérifier les disques et l'étrier. |
| Un défaut d'origine ou de montage incorrect, comme cause principale. | Changer les plaquettes et vérifier les disques et les étriers puisqu'ils pourraient être endommagés. |
| Une température très élevée à cause d'un usage sportif ou qu'un élément de l'équipement de freins ne met pas en action et nourrit la plaquette contre le disque. | Vérifier le fonctionnement et les pièces du système de freinage. Passer aux composants sportifs. |

| DESCRIPTION | EFFECT |
|---|---|
| Un-even wear on rotor surface. | The systems will vibrate from the installation point getting only worse and changing disc surface color in sections of rotor. |
| En-even wear on rotor's surface and discoloring or spotting on rotors. | The rotors will color spot and grooving will start to appear on surface along with pedal vibration. |
| Brake pad surface shows wear only on the outer brake pad edge, inner section shows rusty areas. | Brake power very weak, due to very little braking surface area, pads can crystallize and give vibrations due to inadequate operating temperatures. |
| Disc surface shows dark spots. | Vibrations, not linear brakes feel. |
| Rotor surface shows grooves and surface wear lines. | High noise, brake pads and rotor matching surfaces are almost none. |
| Rotor surface shows different colors, one of the primary colors is blue. | Light vibrations at the beginning, getting worse as we drive longer and faster. |
| Rotor shows light shiny spots due to brake pad compound on rotor's surface. | No initial byte, brake pedal hard, long brake distances required to stop vehicle. |
| Deep lips or grooves on inside or outside edges of rotor's surface. | Very poor brake fell and power, possible noise. |
| Rotor shows high wear and grooves from other metallic parts, backing plates. | Grinding noise at every brake application. |
| Inner disc section breaks or separates from outer blade. | Metal to metal noise, very un-even brake feel and power. |
| Inner rotor center getting warped or un-even shaped. | After installation brake pedal feel is very un-even and vibrates a lot. |
| Stress fractures or grooves on rotor's center section. | Brake vibration and poor modulation right after installation. |
| Rotor blades or friction plates have been separated from inner center we can see un-even wear pattern on them. | Loss of brake feel and power, extreme noise. |

| DESCRIPCIÓN | EFECTO |
|---|---|
| Desgaste no uniforme en la pista del disco. | Aparición de vibraciones y ruidos desde el montaje que aumentan progresivamente. |
| Desgaste irregular en la pista del disco con aparición de manchas. | Aparición progresiva de vibraciones y grietas. |
| Pista del disco sólo gastada por la parte exterior. Oxido en el interior. | Frenada ineficaz al haber poca area de superficie frenante. Vibraciones, cristalizaciones por temperatura inadecuada. |
| Manchas oscuras sobre la pista del disco. | Vibraciones. |
| La pista del disco presenta rayas y surcos. | Fuerte ruido al frenar. La pastilla y disco sólo pisan en una pequeña superfcie. |
| En la pista del disco encontramos distintas coloraciones, principalmente azulado. | Aparición de ligeras vibraciones que aumentan progresivamente. |
| El disco presenta un aspecto brillante-vitrificado en su pista debido a finos depósitos de material de fricción. | Frenada larga e ineficaz. Pedal muy duro y tiempo de respuesta prolongado. |
| Acusadas rebabas y diferencias en la parte int.-ext. pista disco con respecto a zona frenante. | Ineficacia del frenado y aparición de ruidos. |
| Disco muy gastado y dañado con claras muestras de roce con otro metal. | Ruido de rascado, frenada ineficaz. |
| Rotura y separación de la superficie de apoyo de la campana del resto del disco | Frenada defectuosa e inestable. Fuertes vibraciones. Maneta muy diferente. Fuerte golpe inicial y ruido metálico. |
| Deformaciones en la campana, en la superficie de apoyo con el buje. | Fuertes vibraciones en el pedal de freno aparecen tras efectuar el montaje. |
| Grietas en la campana del disco en la zona de apoyo con el buje. | Fuertes vibraciones en el pedal de freno aparecen tras efectuar el montaje. |
| Las pistas se han separado del buje y campana. apreciamos desgaste asimétrico en ellas. | Notamos un fuerte golpe debido a dicha rotura, a la vez de vibraciones, ruidos y pérdida de eficacia. |

| DESCRIZIONE | EFFEITO |
|---|---|
| Consumo non uniforme della superficie del disco freno. | Comparsa di vibrazioni dall'installazione con un peggioramento progressivo e con un cambiamento del colore della superficie frenante del disco. |
| Consumo irregolare della superficie del disco freno e scolorimento o comparsa di macchie. | Il disco si macchia e cominceranno ad apparire dei solchi sulla superficie frenante con comparsa di vibrazioni. |
| La superficie della pastiglia freno mostra un consumo solo sul profilo esterno, la sezione interna mostra aree color ruggine | Potenza della frenata molto debole alla porzione di superficie frenante molto piccola; le pastiglie possono cristallizzare e dare vibrazioni dovute a temperature di esercizio inadeguate. |
| La superficie del disco freno presenta macchie scure. | Vibrazioni, sensazione di frenata non lineare. |
| La superficie del disco freno mostra dei solchi e delle righe. | Elevata rumorosità, i punti di contatto tra pastiglie freno e dischi freno sono quasi nulli. |
| La superficie del disco mostra colori differenti, principalmente blu. | Leggera vibrazione iniziale, peggioramento di tale effetto man mano che si aumentano le prestazioni. |
| Il disco mostra leggere macchie brillanti dovute al materiale d'attrito della pastiglia sulla superficie del disco. | Frenata lunga e inefficacie. |
| Irregolarità di spessore e solchi sul bordo intero o esterno della superficie del disco. | Prestazioni e potenza della frenata pessime, possibile rumorosità. |
| Il disco freno mostra è particolarmente usurato con solchi e altri segni metallici. | Rumore simile al "fischio" ad ogni frenata. |
| La sezione interna del disco freno crea attrito e si separa dal resto della superficie frenante. | Rumore di metallo contro metallo "stridio", potenza e feeling di frenata irregolari. |
| La parte centrale del disco freno è deformata o ha una forma non regolare. | La sensazione sulla leva del freno è molto irregolare e vibra. |
| Rottura da stress o solchi sulla sezione centrale del disco. | Vibrazione in frenata, e scarsa modulabilità della frenata subito dopo l'installazione. |
| Rotor blades or friction plates have been separated from. | Perdita di potenza e sensazione frenante, estrema rumorosità. |

| DESCRIPTION | EFFET |
|---|---|
| Une usure non uniforme dans la piste du disque. | Apparition de vibrations et de bruits dès le montage et qui augmentent progressivement. |
| Une usure irrégulière sur la piste du disque avec l'apparition de taches. | Apparition progressives de vibrations et de crevasses. |
| La piste du disque s'est usée seulement sur la partie extérieure. Oxydation à l'intérieur. | Un freinage inefficace avec une aire faible de surface freinante. |
| Des taches noires sur toute la piste d'un disque. | Vibrations. |
| La piste du disque présente des rayures ou sillons. | Fort bruit au freinage. La plaquette et le disque sont en contact que sur une petite superficie. |
| Sur la piste du disque nous trouvons une coloration distincte, principalement bleuté. | Apparition de légères vibrations qui augmentent progressivement. |
| Le disque présente un aspect brillant-vitrifié sur la piste et un dépôt de la matière de friction. | Freinage long et inefficace. une pédale très dure et le temps de réponse prolongé. |
| Des bavures et une différence sur la partie int. et ext du disque sur la zone de freinage. | Inefficacité du freinage et apparition de bruits. |
| Un disque très usé et abîmé avec des marques de frottement avec un autre métal. | Un bruit de grattage, freinage inefficace. |
| Une rupture de la frette ou une séparation avec l'axe de roue. | Freinage inefficace et instable. Fortes vibrations. Poignée différente. Fort bruit métallique. |
| Des déformations sur la frette, sur la surface d'appui avec l'axe. | De fortes vibrations dans la pédale de frein apparaissent après avoir effectué le montage. |
| Des crevasses sur la frette du disque dans la zone d'appui avec la roue. | De fortes vibrations dans la pédale de frein apparaissent après avoir effectué le montage. |
| Les pistes se sont séparées de la frette et de l'axe. Nous constatons aussi une usure asymétrique de celles-ci. | Nous remarquons un fort coup à la dite rupture, à la fois de vibrations, des bruits et perte d'efficacité. |

| CAUSE | ADVICE |
|---|---|
| Wheel axle wear, rotor and wheel turning out of tolerance. Defective rotation. | Check axle and complete trueness of rotors installation surfaces, alignment. Change rotors and pads. |
| The rotor or pads are or have been positioned/installed wrong. | Check for trueness on rotor, pads and calipers positioning.Change pads and rotors. |
| Caliper not centered correctly, pad not having 100% contact on rotor, compound getting loose on lower section of pad. | Check pads and caliper, must change caliper if necessary, must change pads and rotors. |
| Most of the time this will happen when the pads are leaving compound bedded to the rotors surface. Need to get a different compound. | Change rotors and pads to Galfer's pre-matched rotor/pads combinations. |
| Brake pad compound not adequate to its required performance. | Remove discs and pads, replace with Galfer's pad and rotor kits. |
| Bed-in process has not been done correctly or at all, that makes temperatures to high at the beginning stages of the rotors live, possibly changing the mechanical qualities of rotors. | Replace pads and rotors, make sure to bed-in new pads and rotors for at least 100-200 kms, braking lightly and letting the pads cool of from time to time. |
| Sometimes a lower quality brake pad can show this type of problem. | Replace brake pads with one of Galfer's compounds, always based on your driving conditions. |
| Rotor has gotten to its minimal operational thickness. | Change brake pads and discs. |
| Brakes were operated with their pads completely wear out. | Check caliper pistons, must change pads and rotors. |
| Torque settings on center section /rim too high, not installed to the manufacturers suggested specs. | Replace rotors following manufacturers torque settings and cross pattern bolt process. |
| Bolts used could be the wrong ones; bolt could also be too tight. | Replace brake rotors following manufacturers suggested torque specs. |
| Rotors installed incorrectly, not using a cross pattern bolting process or torque specifications. | Replace rotors following manufacturers torque settings and cross pattern bolt process. |
| Brake caliper could have been installed wrong. | Check brake alignment, replace pads rotors. |

| CAUSA | CONSEJO |
|---|---|
| Oscilación del buje de la rueda fuera del límite de tolerancia. Rodamiento defectuoso. | Comprobar el juego del buje antes de montar el disco. Sustituír discos y pastillas. |
| Mal posicionamiento de pastillas o de la pinza que ha provocado calentamiento con aparición de manchas. | Comprobar alineación de pastillas, discos y pinzas. Sustituír las pastillas y los discos. |
| Pinza descentrada con respecto al disco. Montaje incorrecto de pastilla. Desprendimiento de parte inferior del material fricción. | Verificar pinzas y pastillas. Sustituir pinzas si es necesario, y sobre todo pastillas y discos. |
| Suele ser ocasionado por depósitos de material de fricción sobre el disco. Utilizar otra mezcla. | Sustituir pastillas y discos. |
| Calidad del material de fricción de la pastilla inadecuado, mala mezcla. | Sustituir pastillas y discos. |
| El no haber hecho un período de rodaje provoca un calentamiento que modifica las características mecánicas del disco. | Sustituír discos y pastillas. Realizar un rodaje correcto durante los primeros 100-200 kms. (frenar de forma corta y suave, dejando refrigerar). |
| Las pastillas de mala calidad y cristalizadas pueden ocasionar este problema. | Sustituir pastillas y discos. |
| Se ha llegado al límite del espesor, por debajo del mínimo permitido. | Sustituir pastillas y discos. |
| El disco frenaba contra el soporte metálico de la pastilla ó con el lateral de la pinza. El testigo de desgaste no funciona. | Sustituír las pastillas y los discos. Revisar el estado de la pinza. |
| Un incorrecto apriete de tornillos (excesivo, sobre todo en zona tornillos fijación) ó un mal montaje, sin respetar orden y par. | Sustituír discos respetando el par de apriete y el orden de montaje (en cruz). |
| Los tornillos de fijación del disco apretados de forma excesiva ó tornillo inadecuado (conicidad). | Sustituír los discos respetando el apriete y orden. |
| Un incorrecto apriete de tornillos ó un mal montaje, sin respetar orden y par. | Sustituír discos respetando el par de apriete y el orden de montaje (en cruz). |
| Alineación indebida de la pinza debido a mal montaje u otros problemas. | Sustituír pastillas y discos y comprobar la correcta alineación del sistema de frenos. |

| CAUSA | SOLUZIONE |
|---|---|
| Oscillazione dell'assale della ruota fuori dal limite di tolleranza. Rotazione difettosa. | Controllare il gioco dell'assale e l'esattezza dell'installazione di montaggio del disco. Sostituire il disco e la pastiglia. |
| Il disco o le pastiglie sono state posizionate o installate in modo erroneo. | Verificare l'accuratezza del disco, pastiglia e il posizionamento delle pinze cambiare pastiglie e dischi. |
| La pinza non è correttamente centrata, la pastiglia non è perfettamente a contatto con il disco freno, perdita del materiale d'attrito sulla sezione inferiore della pastiglia freno. | Controllare paglie e pinza cambiare la pinza freno se necessario, cambiare pastiglie e dischi. |
| Nella maggior parte dei casi questo accade quando le pastiglie lasciano materiale d'attrito stratificato sulla superficie del disco freno. Occorre una differente mescola. | Cambiare dischi e pastiglie. |
| Il materiale d'attrito della pastiglia freno non è adeguato alle prestazioni richieste. | Rimuovere dischi pastiglie e sostituire con un kit Galfer. |
| Il processo di fissaggio non è stato correttamente eseguito, la temperatura di utilizzo è troppo elevata, con possibilità di cambiare le caratteristiche meccaniche del disco freno. | Sostituire dischi e pastiglie, assicurarsi che il fissaggio delle nuove pastiglie e dei dischi freno sia corretto e effettuare un rodaggio corretto per almeno 100 o 200 Km, frenare delicatamente e lasciare raffreddare le pastiglie freno di tanto in tanto. |
| Alcune volte una scarsa qualità della pastiglia freno può provocare tale problema. | Sostituire le pastiglie con una delle mescole Galfer, da scegliere in base alle proprie esigenze di guida. |
| Il disco freno ha raggiunto il suo spessore minimo operativo. | Cambiare pastiglie e dischi. |
| Il disco tocca con il supporto metallico delle pastiglie freno o con parte della pinza. | Controllare i pistoncini delle pinze, dovete cambiare pastiglie e dischi. |
| Il settaggio della coppia frenante sulla sezione centrale o del bordo è troppo elevata, non e' stato installato correttamente il disco freno secondo le specifiche del produttore. | Sostituire i dischi freno seguendo i settaggi suggeriti dal costruttore. |
| I bulloni utilizzati potrebbero essere errati oppure potrebbero essere troppo stretti. | Sostituire i dischi freno seguendo i settaggi di chiusura suggeriti dal costruttore. |
| Disco installato in modo non corretto, senza rispettare le specifiche del costruttore. | Sostituire i dischi seguendo i settaggi suggeriti dal costruttore. |
| La pinza freno potrebbe essere installata in modo erroneo. | Controllare l'allineamento del sistema frenante,sostituire i dischi freno e pastiglie freno. |

| CAUSE | RECOMMANDATIONS |
|---|---|
| Une oscillation dans la rotation de la roue hors de la limite de tolérance. Un roulement défectueux. | Vérifier le jeu des roulements avant de monter le disque. Changer les disques et les plaquettes. |
| Une mauvaise position des plaquettes ou de l'étrier qui provoque un échauffement avec apparition de taches. | Vérifier l'alignement des plaquettes et de l'étrier. Changer les plaquettes et les disques. |
| Etrier décentré par rapport au disque. Montage incorrect des plaquettes. | Vérifier les étriers et les plaquettes. Changer les étriers si nécessaire, et surtout les plaquettes et les disques. |
| Parfois occasionné par des dépôts de matériel de friction ur le disque, utiliser un autre mélange. | Changer les plaquettes et les disques. |
| Une qualité du matériel inadéquat de la plaquette, un mauvais mélange. | Changer les plaquettes et les disques. |
| Le fait de ne pas avoir fait une période de rodage provoque un chauffage qui modifie les caractéristiques mécaniques du disque. | Changer les disques et les plaquettes. Faire un rodage correct pendant une période de 100-200 km. (freiner de manière courte et douce en laissant réfrigérer). |
| Les plaquettes de mauvaise qualité et cristallisées, elles peuvent occasionner ce problème. | Changer les plaquettes et les disques. |
| Usure à la limite de l'épaisseur, au-dessous du minimum permis. | Changer les plaquettes et les disques. |
| Le disque freine contre le support métallique de la plaquette. Le témoin ne fonctionne plus. | Changer les plaquettes et les disques. vérifier le fonctionnement de l'étrier de frein. |
| Vis mal serrées ( ou serrage excessif, surtout dans une zone des vis une fixation) ou un mauvais montage, sans respecter d'ordre et couple de serrage. | Changer les disques en respectant l'ordre de montage (en croix) et le couple de serrage. |
| Les vis de fixation du disque serrées de façon excessive ou de forme inadéquat (conique). | Changer les disques en respectant l'ordre de montage (en croix) et le couple. |
| Montage incorrect des vis ou mauvais serrage, sans respecter l'ordre et le couple. | Changer les disques en respectant l'ordre de montage (en croix) et le couple. |
| Un alignement incorrect de l'étrier à cause d'un mauvais montage ou d'autres problèmes. | Changer les plaquettes et les disques et vérifier l'alignement correct du système de freinage. |

*The pictures, drawings and all the information contained in this catalog isn't binding in any case, and don't give the right to claim or compensation by the customer. The values shown are for reference. Industries Galfer reserves the right to make changes to their products without prior notice. All trademarks appearing in this catalog are understood only as a reference for use the GALFER products as spare parts for motorcycles.*

*Design and production: MARKETING dep. of Industrias Galfer. Printed: GRADIEN TRES, S.L.*

*2015 © INDUSTRIAS GALFER, S.A.*

Las imágenes, dibujos e información contenida en este catálogo no será vinculante en ningún caso, ni dará derecho a reclamación o indemnización alguna por parte del cliente. Los valores que aparecen son de referencia. Industrias Galfer se reserva el derecho a efectuar modificaciones de sus productos sin previo aviso. Todas las marcas registradas que aparecen en este catálogo se entienden exclusivamente como una referencia para la utilización de los productos GALFER como recambios para motocicletas.

Diseño y producción: Dep. MARKETING de Industrias Galfer. Impresión: GRADIEN TRES, S.L.

© INDUSTRIAS GALFER, S.A. 2015

# PUSHING BRAKES TO THE LIMIT

**DISTRIBUTOR • DISTRIBUIDOR**
DISTRIBUITO • DISTRIBUÉ

Website
galfermoto.com

Ecommerce
galferonline.es

GALFER
PERFORMANCE BRAKING SYSTEMS


**INDUSTRIAS GALFER S.A.**
c/ ctra. de Montmeló, 50 · Circuit de Catalunya
08403 Granollers · BARCELONA (SPAIN)
Tel: +34 93 568 90 90 · Fax: +34 93 568 90 83
info@galfer.es · www.galfermoto.com

**GALFER USA**
310 Irving Drive · Oxnard CA 93030
Ph. 805 988 2900 · Fx. 805 988 2948
corporate@galferusa.com
www.galferusa.com


Ref. 95035101